UNDERDRAIN DETAIL
NTS

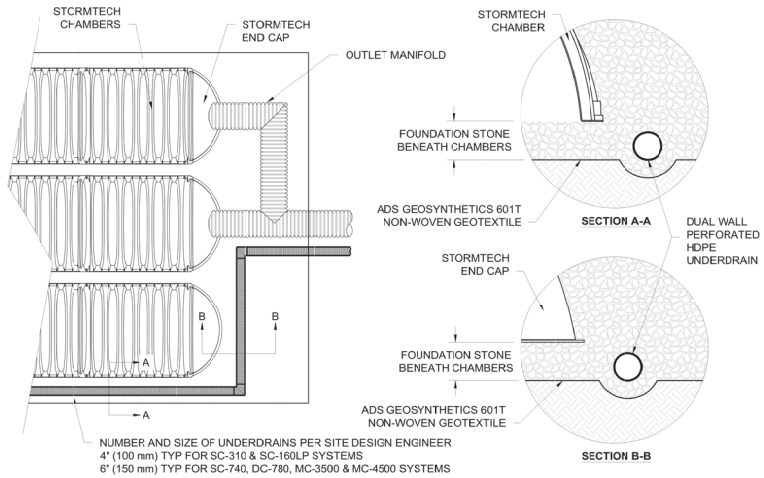

MC-SERIES END CAP INSERTION DETAIL
NTS

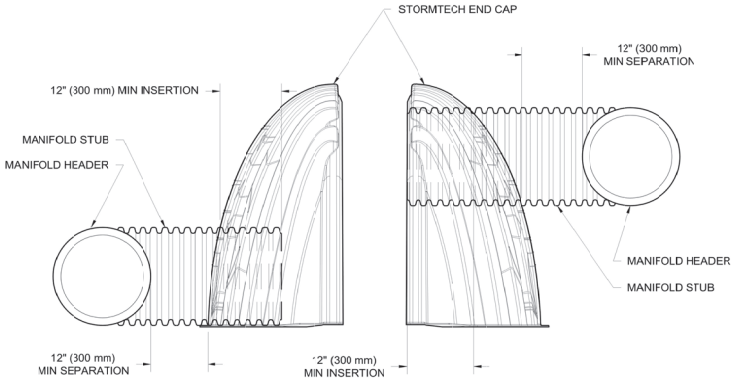

NOTE: MANIFOLD STUB MUST BE LAID HORIZONTAL FOR A PROPER FIT IN END CAP OPENING.

MC-4500 TECHNICAL SPECIFICATION
NTS

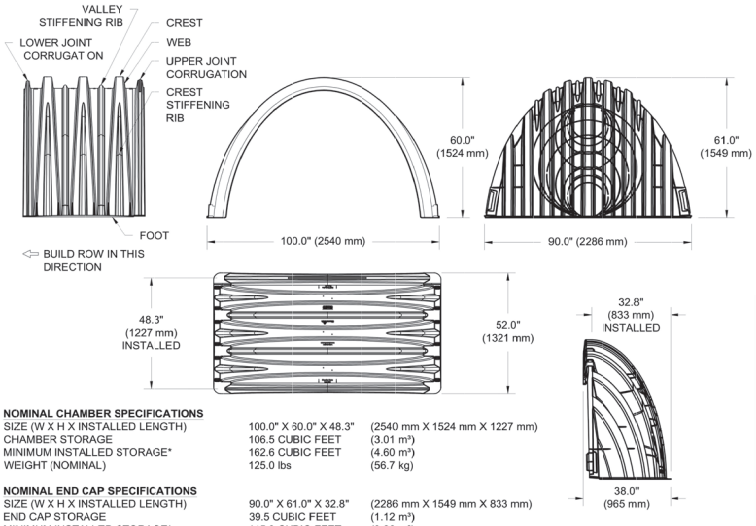

NOMINAL CHAMBER SPECIFICATIONS

SIZE (W X H X INSTALLED LENGTH)	100.0" X 30.0" X 48.3"	(2540 mm X 1524 mm X 1227 mm)
CHAMBER STORAGE	106.5 CUBIC FEET	(3.01 m³)
MINIMUM INSTALLED STORAGE*	162.6 CUBIC FEET	(4.60 m³)
WEIGHT (NOMINAL)	125.0 lbs	(56.7 kg)

NOMINAL END CAP SPECIFICATIONS

SIZE (W X H X INSTALLED LENGTH)	90.0" X 61.0" X 32.8"	(2286 mm X 1549 mm X 833 mm)
END CAP STORAGE	39.5 CUBIC FEET	(1.12 m³)
MINIMUM INSTALLED STORAGE*	115.3 CUBIC FEET	(3.26 m³)
WEIGHT (NOMINAL)	90 lbs.	(40.8 kg)

*ASSUMES 12" (305 mm) STONE ABOVE, 9" (229 mm) STONE FOUNDATION AND BETWEEN CHAMBERS, 12" (305 mm) STONE PERIMETER IN FRONT OF END CAPS AND 40% STONE POROSITY.

PARTIAL CUT HOLES AT BOTTOM OF END CAP FOR PART NUMBERS ENDING WITH "B"
PARTIAL CUT HOLES AT TOP OF END CAP FOR PART NUMBERS ENDING WITH "T"
END CAPS WITH A PREFABRICATED WELDED STUB END WITH "W"

PART #	STUB	B	C
MC4500IEPP06T	6" (150 mm)	42.54" (1081 mm)	---
MC4500IEPP06B		---	0.86" (22 mm)
MC4500IEPP08T	8" (200 mm)	40.50" (1029 mm)	---
MC4500IEPP08B		---	1.01" (26 mm)
MC4500IEPP10T	10" (250 mm)	38.37" (975 mm)	---
MC4500IEPP10B		---	1.33" (34 mm)
MC4500IEPP12T	12" (300 mm)	35.69" (907 mm)	---
MC4500IEPP12B		---	1.55" (39 mm)
MC4500IEPP15T	15" (375 mm)	32.72" (831 mm)	---
MC4500IEPP15B		---	1.70" (43 mm)
MC4500IEPP18T	18" (450 mm)	29.36" (746 mm)	---
MC4500IEPP18TW			
MC4500IEPP18B		---	1.97" (50 mm)
MC4500IEPP18BW			
MC4500IEPP24T	24" (600 mm)	23.05" (585 mm)	---
MC4500IEPP24TW			
MC4500IEPP24B		---	2.26" (57 mm)
MC4500IEPP24BW			
MC4500IEPP30BW	30" (750 mm)	---	2.95" (75 mm)
MC4500IEPP36BW	36" (900 mm)	---	3.25" (83 mm)
MC4500IEPP42BW	42" (1050 mm)	---	3.55" (90 mm)

NOTE: ALL DIMENSIONS ARE NOMINAL

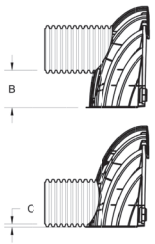

CUSTOM PREFABRICATED INVERTS ARE AVAILABLE UPON REQUEST. INVENTORIED MANIFOLDS INCLUDE 12-24" (300-600 mm) SIZE ON SIZE AND 15-48" (375-1200 mm) ECCENTRIC MANIFOLDS. CUSTOM INVERT LOCATIONS ON THE MC-4500 END CAP CUT IN THE FIELD ARE NOT RECOMMENDED FOR PIPE SIZES GREATER THAN 10" (250 mm). THE INVERT LOCATION IN COLUMN 'B' ARE THE HIGHEST POSSIBLE FOR THE PIPE SIZE.

VA PARKING LOT
SIOUX FALLS - SD

DATE: 06/22/20 DRAWN: NBR
PROJECT #: S159681 CHECKED: JPR

DATE	DRAWN	CHKD	DESCRIPTION
07/13/20	NBR	CJD	REVISED SOUTH BED LAYOUT

StormTech® Detention-Retention-Water Quality
520 CROMWELL AVENUE | ROCKY HILL | CT | 06067
860-529-8188 | 888-892-2694 | WWW.STORMTECH.COM

ADS® ADVANCED DRAINAGE SYSTEMS, INC.
4640 TRUEMAN BLVD
HILLIARD, OH 43026

THIS DRAWING HAS BEEN PREPARED BASED ON INFORMATION PROVIDED TO ADS UNDER THE DIRECTION OF THE SITE DESIGN ENGINEER OR OTHER PROJECT REPRESENTATIVE. THE SITE DESIGN ENGINEER SHALL REVIEW THIS DRAWING PRIOR TO CONSTRUCTION. IT IS THE ULTIMATE RESPONSIBILITY OF THE SITE DESIGN ENGINEER TO ENSURE THAT THE PRODUCT(S) DEPICTED AND ALL ASSOCIATED DETAILS MEET ALL APPLICABLE LAWS, REGULATIONS, AND PROJECT REQUIREMENTS.

Revisions:	Date:

CONSULTANT

Calvin L. Hinz Architects, P.C.
3705 North 204th Street
Elkhorn, Nebraska 68022
Phone: 402.291.6941 Fax: 402.291.9193

Shaffer & Stevens
9910 North 48th Street
Omaha, Nebraska68152
Phone: 402.455.7698 Fax: 402.455.7597

ARCHITECT/ENGINEER OF RECORD

Specialized Engineering Solutions
10360 Ellison Circle
Omaha, Nebraska 68134
P (402) 991-5520

Calibre Engineering
9000 S Ridgeline Blvd #105
Highlands Ranch, CO 80129
Phone:(303) 730-0434

STAMP

Office of Construction and Facilities Management

U.S. Department of Veterans Affairs

Drawing Title	Phase	Project Title	Project Number
ADS PLANS	CD SUBMISSION	MITIGATE CAMPUS DRAINAGE	438-18-107
Approved: Project Director		Location: Sioux Falls VA Health Care System, SD	Building Number: .
		Issue Date: FEBRUARY 26, 2021 / Checked: ETG / Drawn: RLB	Drawing Number: C-138

VA FORM 08-6231

6/14/2020 12:36:03 PM
P:\CLH VA SIOUX FALLS DRAIN\CADD\CIVIL\STORMADS1-9.DWG 2/26/2021 3:58 PM Eric Gallegos

GENERAL STRUCTURAL NOTES

DESIGN CRITERIA:

APPLICABLE BUILDING CODE: 2018 IBC (WITH VA AMENDMENTS)

SELECT REFERENCED STANDARDS:
ACI 301-11: CODE OF STANDARD PRACTICE FOR REINFORCED CONCRETE BUILDINGS
ACI 318-14: BUILDING CODE REQUIREMENTS FOR STRUCTURAL CONCRETE
ASCE 7-16: MINIMUM DESIGN LOADS FOR BUILDINGS AND OTHER STRUCTURES, INCLUDING SUPPLEMENT NO. 1 AND 2, EXCLUDING CHAPTER 14 AND APPENDIX 11A
VA SEISMIC DESIGN REQUIREMENTS, H-18-8

OTHER SELECT REFERENCED STANDARDS MAY BE INDICATED ELSEWHERE IN THE CONTRACT DOCUMENTS, AS APPLICABLE.

THE PROVISIONS OF THE REFERENCED BUILDING CODE AND ALL REFERENCED STANDARDS THEREIN SHALL APPLY TO THIS PROJECT. WHERE THERE IS A CONFLICT BETWEEN A GENERAL REQUIREMENT AND A SPECIFIC REQUIREMENT, THE SPECIFIC REQUIREMENT SHALL BE APPLICABLE. TYPICALLY, THE LATEST EDITION OF CONSTRUCTION STANDARDS SHALL BE UTILIZED, AS APPROVED BY THE AUTHORITY HAVING JURISDICTION.

STRUCTURAL SYSTEMS HAVE BEEN DESIGNED (OR SHALL BE DESIGNED FOR DELEGATED DESIGN ITEMS) TO RESIST THE FOLLOWING DESIGN LOADS IN THEIR FINAL, IN-PLACE CONDITION:

DEAD LOAD:
WEIGHT OF ALL MATERIALS OF FINAL BUILDING CONSTRUCTION, INCLUDING BUILT-IN PARTITIONS AND FIXED SERVICE EQUIPMENT.

SNOW LOAD:

GROUND SNOW LOAD	Pg = 40 PSF
FLAT ROOF SNOW LOAD*	Pf = 28 PSF
MINIMUM SNOW LOAD	Pm = 20 PSF
SNOW EXPOSURE FACTOR	Ce = 1.0
SNOW THERMAL FACTOR	Ct = 1.0
SNOW IMPORTANCE FACTOR	Is = 1.0
RISK CATEGORY	II
RAIN ON SNOW	0 PSF

*PARTIAL, UNBALANCED, AND DRIFT SNOW LOADING HAVE BEEN APPLIED IN ACCORDANCE WITH BUILDING CODE AND ASCE 7.

SNOW LOADS ARE NOT REDUCIBLE.

WIND LOAD:

ULTIMATE WIND SPEED	Vult = 112 MPH (3-SECOND GUST)
ASD WIND SPEED	Vasd = 89 MPH (3-SECOND GUST)
DRIFT WIND SPEED (10-YEAR MRI)	Vdrift = 76 MPH (3-SECOND GUST)
GUST EFFECT FACTOR	G = 0.85
WIND EXPOSURE CATEGORY	C
RISK CATEGORY	II
INTERNAL PRESSURE COEFFICIENT	GCpi = +/- 0.18

SEISMIC LOAD:

MAPPED SPECTRAL RESPONSE COEFFICIENTS	
Ss	= 0.091
S1	= 0.035
DESIGN SPECTRAL RESPONSE COEFFICIENTS	
Sds	= 0.097
Sd1	= 0.057
RISK CATEGORY	II
SEISMIC IMPORTANCE FACTOR	Ie = 1.0
SEISMIC DESIGN CATEGORY	A
SEISMIC SITE CLASS	D (ASSUMED)
LONG-PERIOD TRANSITION PERIOD	TL = 12 SEC
ANALYSIS PROCEDURE USED:	NONE – EXISTING SEISMIC LFRS NOT TRIGGERED FOR EVALUATION

ROOF LIVE LOAD:
20 PSF TYPICAL

ROOF LIVE LOAD REDUCTIONS HAVE NOT BEEN MADE.

FLOOR LIVE LOAD*,**:
STOOP AND STAIR =100 PSF

*PROVISIONS FOR MOVEABLE PARTITIONS HAVE NOT BEEN APPLIED, WHICH IS IN ACCORDANCE WITH BUILDING CODE.

LIVE LOAD REDUCTIONS HAVE NOT BEEN MADE.

CONSTRUCTION LOADING IS SOLELY THE RESPONSIBILITY OF THE CONTRACTOR.

GENERAL PROJECT NOTES

1. ALL DIMENSIONS AND CONDITIONS SHOWN ON THE DRAWINGS SHALL BE VERIFIED BY THE CONTRACTOR PRIOR TO FABRICATION OR CONSTRUCTION.

2. THE ARCHITECT SHALL BE NOTIFIED IN WRITING OF ANY EXISTING CONDITIONS WHICH DIFFER FROM THOSE SHOWN ON THE CONTRACT DOCUMENTS.

3. THE ENGINEER WILL NOT ACCEPT SHOP DRAWINGS WITHOUT FIRST BEING REVIEWED AND SIGNED BY THE CONTRACTOR. ALL CHANGES SHALL BE FLAGGED AND NOTED AS DEVIATING FROM THE CONTRACT DOCUMENTS.

4. THE CONTRACTOR SHALL BE RESPONSIBLE FOR THE PROTECTION OF THE EXISTING BUILDING DURING THE EXECUTION OF THE CONTRACT.

5. ALL CONSTRUCTION SHALL BE COORDINATED WITH THE OWNER TO MINIMIZE DISRUPTION.

6. THE CONTRACTOR SHALL PROVIDE AND MAINTAIN ADEQUATE SHORING AND BRACING TO PROTECT THE EXISTING STRUCTURE AND UNFINISHED NEW CONSTRUCTION.

7. AN ENGINEER REGISTERED IN THE STATE OF SOUTH DAKOTA SHALL PERFORM THE DESIGN OF ALL SHORING.

SPECIAL INSPECTIONS:

1. PROVIDE SPECIAL INSPECTIONS AS REQUIRED IN ACCORDANCE WITH THE INTERNATIONAL BUILDING CODE, THESE CONTRACT DOCUMENTS, AND THE STATEMENT OF SPECIAL INSPECTIONS FOR THE FOLLOWING: SOILS AND FOUNDATIONS, REINFORCED CONCRETE.

2. PROVIDE THE SPECIAL INSPECTOR 48 HOURS PRIOR NOTICE FOR THE SPECIAL INSPECTIONS.

FOUNDATIONS AND FOOTINGS:

1. FOUNDATIONS ARE DESIGNED FOR AN ASSUMED BEARING PRESSURE OF 2,000 PSF FOR CONTINUOUS AND ISOLATED SPREAD FOOTINGS. NO SOILS REPORT WAS AVAILABLE.

2. IF THE CONTRACTOR DISCOVERS POOR SOIL CONDITIONS UPON EXCAVATION, THE ARCHITECT SHALL BE NOTIFIED IN WRITING. PRESSURES DO NOT INCLUDE TEMPORARY FORCES DURING COMPACTION OR SURCHARGE, SO WALLS AND GRADE BEAMS SHALL BE SUITABLY BRACED DURING BACKFILLING TO PREVENT DAMAGE OR EXCESSIVE DEFLECTION.

3. A GEOTECHNICAL ENGINEER, REGISTERED IN THE JURISDICTION OF THE PROJECT, SHALL INSPECT THE SOIL EXCAVATION AFTER THE FOOTINGS ARE EXCAVATED AND VERIFY THE ASSUMED BEARING PRESSURE BEFORE THE FOOTINGS ARE POURED. IF THE ALLOWABLE BEARING PRESSURE IS LESS THAN THE ASSUMED BEARING PRESSURE, THE ARCHITECT SHALL BE NOTIFIED IN WRITING FOR POTENTIAL REDESIGN BY THE ENGINEER BEFORE PROCEEDING WITH THE PLACEMENT OF THE FOOTINGS.

4. THE CONTRACTOR SHALL NOTIFY THE SOILS SPECIAL INSPECTOR AT LEAST 48 HOURS PRIOR TO THE INSPECTION.

5. ALL FOOTINGS SHALL BE PLACED ON EITHER UNDISTURBED PREVIOUSLY COMPACTED CONTROLLED FILL OR UNDISTURBED NATIVE SOILS AS RECOMMENDED BY THE ON SITE GEOTECHNICAL ENGINEER.

6. FOOTINGS SUBJECT TO FROST SHALL HAVE A MINIMUM OF 60 INCHES BETWEEN FINISHED GRADE AND THE BOTTOM OF FOOTINGS. ELEVATIONS OF BOTTOM OF ALL FOOTINGS HAVE BEEN ESTIMATED BASED ON AVAILABLE INFORMATION AND SHALL NOT BE CONSTRUED AS WAIVING ANY OF THE MINIMUM REQUIREMENTS.

7. REMOVE ALL DEBRIS FROM THE EXCAVATION BEFORE THE CONCRETE IS POURED.

8. ALL OVER-EXCAVATION SHALL BE FILLED WITH CONCRETE, ENGINEERED FILL APPROVED BY THE SOILS SPECIAL INSPECTOR, OR FLOWABLE FILL.

9. ALL FORMS AND ORGANIC DEBRIS SHALL BE REMOVED PRIOR TO BACKFILLING.

10. THE CONTRACTOR SHALL BRING THE BACKFILL UP EQUALLY ON BOTH SIDES OF THE FOUNDATION WALLS AND BEAMS BELOW GRADE SO AS NOT TO CREATE AN UNBALANCED LOADING.

CONCRETE AND REINFORCING STEEL:

1. CONCRETE WORK SHALL CONFORM TO ALL REQUIREMENTS OF ACI 301, UNLESS NOTED OTHERWISE.

2. CONCRETE CLASSES AND USAGES:

A. FOOTINGS:
- MINIMUM COMPRESSIVE STRENGTH; 4500 PSI AT 28 DAYS
- MAXIMUM WATER/CEMENTITIOUS MATERIALS RATIO; 0.45
- COARSE AGGREGATE; LIMESTONE, 1" NOMINAL, 30% OF TOTAL AGGREGATE
- SLUMP RANGE BETWEEN 2" AND 4"
- AIR ENTRAINMENT RANGE BETWEEN 4% AND 6%

B. INTERIOR SLABS ON GRADE (REPAIRS):
- MINIMUM COMPRESSIVE STRENGTH; 3500 PSI AT 28 DAYS
- MAXIMUM WATER/CEMENTITIOUS MATERIALS RATIO; 0.45
- COARSE AGGREGATE; LIMESTONE, 1" NOMINAL, 40% OF TOTAL AGGREGATE
- SLUMP RANGE BETWEEN 2" AND 4"
- NO ENTRAINED AIR

3. FLY ASH MAY BE USED UP TO 25%, BY WEIGHT, OF CEMENTITIOUS MATERIAL. FLY ASH SHALL NOT BE USED IN WALLS, COLUMNS, OR SLABS WITH EXPOSED CONCRETE FINISH.

4. NON-SHRINK GROUT SHALL BE CEMENTITIOUS STRUCTURAL GROUT AND SHALL NOT CONTAIN METALLIC MATERIAL OR CHLORIDES. MINIMUM COMPRESSIVE STRENGTHS SHALL BE AS FOLLOWS, 3,000 PSI AT 1 DAY, 5,000 PSI AT 7 DAYS AND 6,000 PSI AT 28 DAYS.

5. THE CONTRACTOR SHALL VERIFY AND COORDINATE ALL MECHANICAL AND ELECTRICAL SLEEVES AND ALL UTILITY LOCATIONS PRIOR TO PLACEMENT OF CONCRETE.

6. ALL REINFORCING STEEL SHALL BE ASTM A-615, GRADE 60, EXCEPT REINFORCING TO BE WELDED SHALL BE ASTM A-706, UNLESS NOTED OTHERWISE. WELDING SHALL USE E80XX ELECTRODES IN CONFORMANCE WITH AWS D1.4.

7. ALL REINFORCING SHALL BE CONTINUOUS OR SHALL LAP 56 BAR DIAMETERS UNLESS NOTED OTHERWISE.

8. HEADED DEFORMED BARS SHALL CONFORM TO ASTM A-615, GRADE 60 AND ASTM A970 INCLUDING ANNEX A1 REQUIREMENTS FOR CLASS HA HEAD DIMENSIONS. OBSTRUCTIONS OR INTERRUPTIONS OF THE BAR DEFORMATIONS, IF ANY, SHALL NOT EXTEND MORE THAN 2 BAR DIAMETERS FORM THE BEARING FACE OF THE HEAD.

9. PROVIDE CORNER BARS AND LAP CORNER BARS WITH MAIN REINFORCEMENT.

10. FLOOR FINISH TOLERANCES FOR SLABS ON GRADE SHALL BE IN ACCORDANCE WITH ACI 117, STANDARD SPECIFICATIONS FOR TOLERANCES FOR CONCRETE CONSTRUCTION AND MATERIALS. THE F-NUMBER SYSTEM SHALL BE USED WITH A FLATNESS OF 30 AND A LEVELNESS OF 20 MEASURED IN ACCORDANCE WITH ASTM E 1155-87.

11. A VAPOR BARRIER SHALL BE USED AT ALL INTERIOR SLABS ON GRADE REPAIRS. THE THICKNESS SHALL BE AT LEAST 15 MILS. THE VAPOR BARRIER SHALL BE PLACED UNDER THE GRANULAR FILL.

12. WHERE THE SPACING OF FOOTING OR SLAB REINFORCING IS CALLED OUT AS "ON CENTER (O.C.)", PLACE THE FIRST BAR 3" FROM THE EDGE OF THE FOOTING OR SLAB.

13. CONCRETE PROTECTION FOR REINFORCING SHALL BE AS FOLLOWS UNLESS NOTED OTHERWISE:

	MINIMUM COVER (INCHES)
CAST AGAINST AND PERMANENTLY EXPOSED TO EARTH	3
EXPOSED TO EARTH OR WEATHER	
#5 BARS AND SMALLER	1 ½
#6 THROUGH #18 BARS	2
NOT EXPOSED TO WEATHER OR IN CONTACT WITH EARTH, SLABS, WALLS AND JOISTS	
#11 BARS AND SMALLER	¾
#14 AND #18 BARS	1 ½
BEAMS, GIRDERS AND COLUMNS (PRINCIPAL REINFORCEMENT, STIRRUPS OR SPIRALS)	1 ½

14. THE CONTRACTOR SHALL SUBMIT CONCRETE REINFORCING STEEL SHOP DRAWINGS TO THE ARCHITECT.

15. PROVIDE ¾-INCH CHAMFER ON ALL EXPOSED CONCRETE CORNERS, EXCEPT WHERE MASONRY WALLS ARE LAID FLUSH WITH THE WALL, COLUMN, OR BEAM FACE.

16. FORMWORK SHALL BE ADJUSTED BEFORE AND AFTER CONCRETE PLACING OPERATIONS (PRIOR TO INITIAL SET) TO COMPENSATE FOR FORMWORK DEFLECTION, IN ADDITION TO ANY CAMBER SPECIFIED ON THE DRAWINGS.

17. NON-CONTINUOUS ENDS OF TOP BARS IN FOOTINGS AND SLABS SHALL TERMINATE WITH A STANDARD 90-DEGREE OR 180 DEGREE HOOK, UNLESS SPECIFICALLY NOTED OTHERWISE.

POST-INSTALLED ANCHORAGE:

1. ALL POST-INSTALLED (MECHANICAL AND/OR ADHESIVE) ANCHORS SHALL BE THE TYPE, SIZE AND EMBEDMENT AS SHOWN ON THE DRAWINGS. WHEN EMBEDMENT IS NOT SHOWN ON THE DRAWINGS, THE EMBEDMENT SHALL BE THE STANDARD (NOT MINIMUM) EMBEDMENT AS RECOMMENDED BY THE MANUFACTURER.

2. THE PLACEMENT OF EXPANSION BOLTS IN MASONRY HEAD JOINTS OR "T" JOINTS SHALL BE AVOIDED IF POSSIBLE. EXPANSION BOLTS SHALL HAVE A MINIMUM OF 8" OF GROUT AROUND ALL SIDES OF THE BOLTS.

3. APPROVED EXPANSION ANCHORS SHALL BE:
a. KWIK BOLT 3 EXPANSION ANCHOR BY HILTI,
b. TRUBOLT WEDGE ANCHOR BY ITW RAMSET / REDHEAD,
c. OR AN APPROVED EQUAL.

4. APPROVED ADHESIVE ANCHORS SHALL BE:
a. HY-200 INJECTION ADHESIVE ANCHOR INTO SOLID CONCRETE OR SOLID MASONRY BLOCK, BY HILTI,
b. HY-70 INJECTION ADHESIVE ANCHOR WITH SCREEN TUBE INTO HOLLOW MASONRY BLOCK OR SOLID BRICK WITH VOIDS, BY HILTI,
c. EPCON ADHESIVE ANCHOR SYSYEM WITH CERAMIC 6 EPOXY INTO SOLID CONCRETE OR SOLID MASONRY, BY ITW RAMSET / REDHEAD,
d. EPCON ADHESIVE ANCHOR SYSYEM WITH CERAMIC 6 EPOXY WITH SCREEN TUBES INTO HOLLOW MASONRY BLOCK OR SOLID BRICK WITH VOIDS, BY ITW RAMSET / REDHEAD,
e. OR AN APPROVED EQUAL.

DEMOLITION:

1. PRIOR TO REMOVAL OF THE EXISTING SUPPORTING STRUCTURE, ADEQUATELY SHORE THE EXISTING PORTIONS SO THAT NO MOVEMENT OCCURS. MAINTAIN THE EXISTING LINES AND ELEVATIONS AFTER PERMANENT SUPPORTS ARE IN PLACE.

2. SHORING FOR THE EXISTING STRUCTURE MUST BE POSITIONED TO ALLOW THE FACILITY TO OPERATE AND REMAIN OPEN DURING ITS NORMAL HOURS.

3. ANY DEMOLITION OR CONSTRUCTION WHICH RESULTS IN SIGNIFICANT DUST OR NOISE MUST BE SEPARATED FROM THE REMAINING BUILDING BY AN ADEQUATE DUST FRAMED PARTITION AND A POLYETHYLENE LINER.

4. PROVIDE TEMPORARY HOOK-UPS TO ALL DISRUPTED UTILITIES DURING DEMOLITION AND UNTIL THE NEW PERMANENT HOOK-UPS ARE COMPLETED.

NORTH

Revisions:	Date:

ARCHITECT/ENGINEER OF RECORD

CLH Calvin L. Hinz Architects, P.C.
Calvin L. Hinz Architects, P.C.
3705 North 200th Street
Elkhorn, Nebraska 68022
Phone: 402.291.6941 Fax: 402.291.9193

Shaffer & Stevens
9910 North 48th Street
Omaha, Nebraska68152
Phone: 402.455.7698 Fax: 402.455.7597

SES Specialized Engineering Solutions
Specialized Engineering Solutions
10360 Ellison Circle
Omaha, Nebraska 68134
P (402) 991-5520

Calibre
Calibre Engineering
9090 S Ridgeline Blvd #105
Highlands Ranch, CO 80129
Phone:(303) 730-0434

STAMP

PROFESSIONAL STRUCTURAL ENGINEER
BRAD ANTHONY SCHAAP
E-11934
STATE OF NEBRASKA
2/26/21

Office of Construction and Facilities Management

VA U.S. Department of Veterans Affairs

Drawing Title	Phase	Project Title	Project Number
STRUCTURAL GENERAL NOTES	CD SUBMISSION	Mitigate Campus Drainage	438-18-107

Building Number	.
Approved:	
Location	Sioux Falls VA Health Care System, SD
Issue Date	February 26, 2021
Checked	BAS
Drawn	MGJ
Drawing Number	S-001

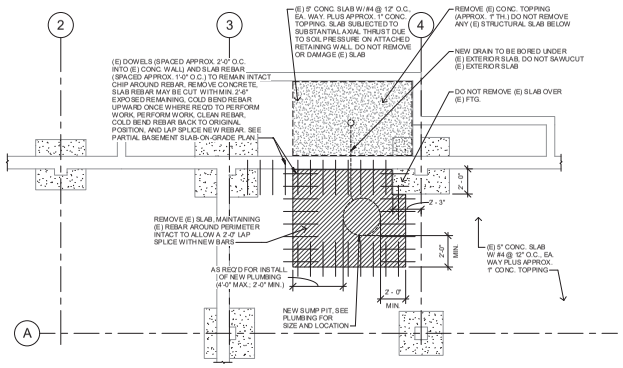

B1 PARTIAL BASEMENT STRUCTURAL DEMO PLAN
1/4" = 1'-0"

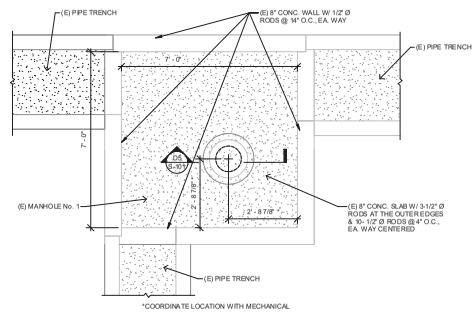

B5 MANHOLE No 1 BASE PLAN
1/2" = 1'-0"

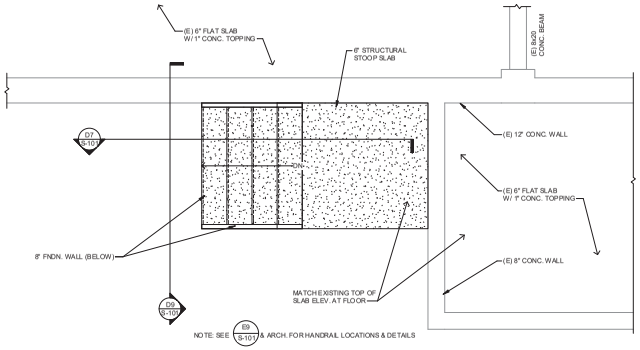

B7 PARTIAL FIRST FLOOR FRAMING PLAN
1/2" = 1'-0"

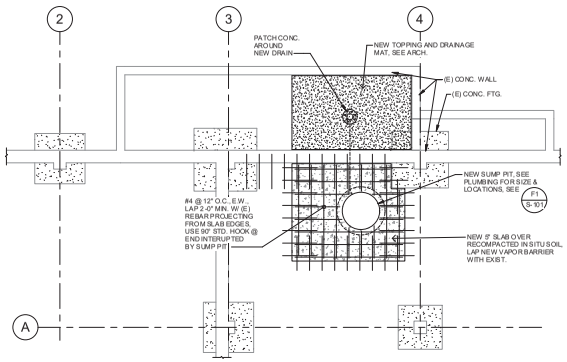

D1 PARTIAL BASEMENT SLAB-ON-GRADE PLAN
1/4" = 1'-0"

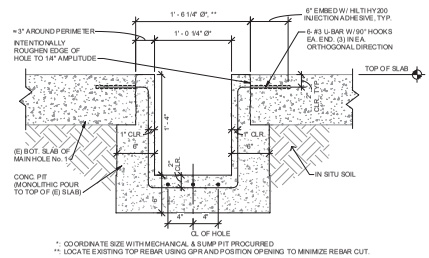

D5 MANHOLE No 1 PIT BASE DETAIL FOR NEW SUMP PIT
1 1/2" = 1'-0"

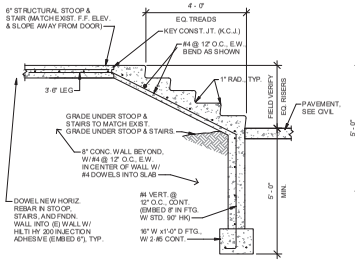

D7 STAIR SECTION
1/2" = 1'-0"

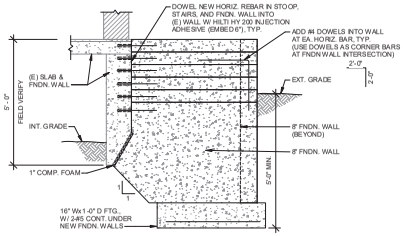

D9 SECTION @ EXIST. WALL
1/2" = 1'-0"

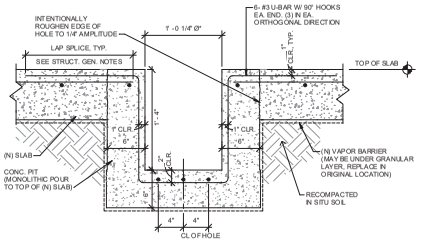

F1 BASEMENT SUMP PIT DETAIL
1 1/2" = 1'-0"

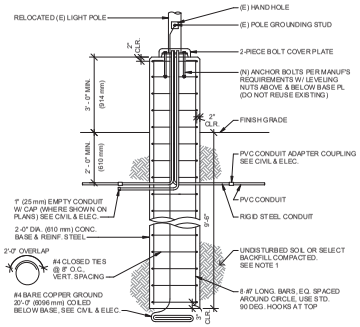

DETAIL NOTES:
1. SELECT BACKFILL SHALL BE NATIVE CLAYS (CL), NOT EXISTING FILL, TOPSOIL OR ORGANIC MATERIAL EXCEPT WITHIN THE TOP 1'-0'. IF BORED IN, CONFIRM NATIVE CLAYS (CL) PRESENT OR CONTACT RESIDENT ENGINEER FOR REDESIGN.

2. REFER TO SPECIFICATION SECTION 26 56 00 FOR MOUNTING & LEVELING REQUIREMENTS.

F6 POLE BASE DET.
1/2" = 1'-0"

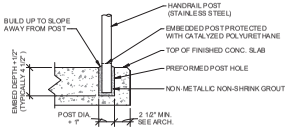

E9 EMBEDDED HANDRAIL POST DETAIL
1 1/2" = 1'-0"

NORTH

Revisions:	Date:

ARCHITECT/ENGINEER OF RECORD

CLH Calvin L. Hinz Architects, P.C.
3705 North 200th Street
Elkhorn, Nebraska 68022
Phone: 402.291.6941 Fax: 402.291.9193

Shaffer & Stevens
9910 North 48th Street
Omaha, Nebraska 68152
Phone: 402.455.5686 Fax: 402.455.5597

SES Specialized Engineering Solutions
Specialized Engineering Solutions
10360 Elkhorn Circle
Omaha, Nebraska 68134
P (402) 991-5520

Calibre
Calibre Engineering
9090 S Ridgeline Blvd #105
Highlands Ranch, CO 80129
Phone:(303) 730-0434

STAMP
STATE OF NEBRASKA STRUCTURAL ENGINEER BRAD ANTHONY SCHRAP E-11936 LICENSED PROFESSIONAL ENGINEER
02/26/21

Office of Construction and Facilities Management
VA U.S. Department of Veterans Affairs

Drawing Title	Phase	Project Title	Project Number
STOOP/STAIR & DETAILS AND SUMP PITS	CD SUBMISSION	Mitigate Campus Drainage	438-18-107
Approved:		Location: Sioux Falls VA Health Care System, SD	Building Number: .
		Issue Date: February 26, 2021 / Checked: BAS / Drawn: MGJ	Drawing Number: S-101

VA FORM 08-6231

2/25/2021 2:20:34 PM
C:\DWG\2018\18107\S101.rvt

B2 TOP OF DOOR SILL
N.T.S.

C2 FRONT OF DOOR SILL / STOOP
N.T.S.

E2 FRONT VW OF STEPS
N.T.S.

E3 ANGLE VW OF STEPS
N.T.S.

F2 TRASH BIN
N.T.S.

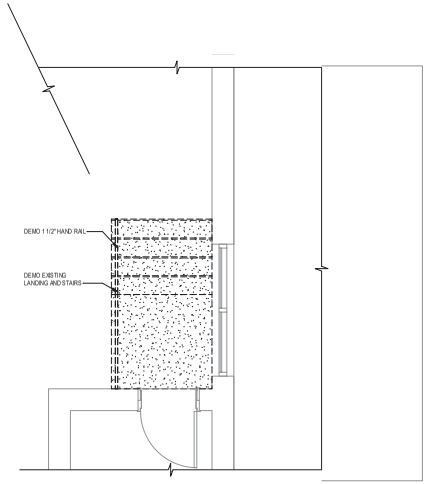

A4 PLAN VIEW DEMO
3/8" = 1'-0"

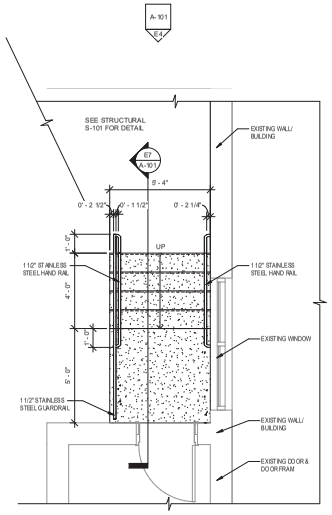

E7 PLAN VIEW
3/8" = 1'-0"

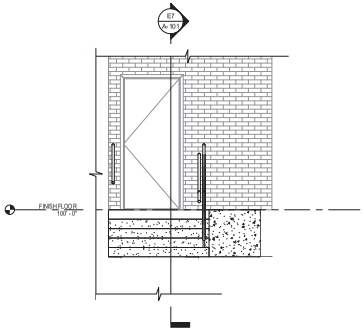

E4 NORTH ELEVATION VIEW
3/8" = 1'-0"

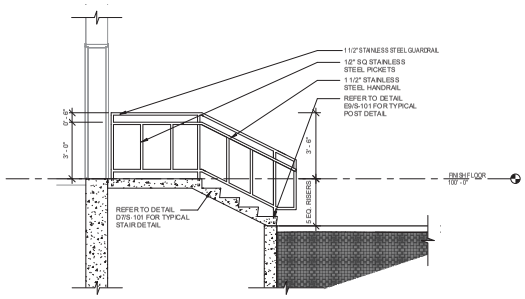

E7 Section 1
3/8" = 1'-0"

NORTH

Revisions:	Date:

ARCHITECT/ENGINEER OF RECORD

CLH Calvin L. Hinz Architects, P.C.
3705 North 200th Street
Elkhorn, Nebraska 68022
Phone: 402.291.6941 Fax: 402.291.9193

Shaffer & Stevens
9910 North 48th Street
Omaha, Nebraska68152
Phone: 402.455.5698 Fax: 402.455.5597

SES Specialized Engineering Solutions
Specialized Engineering Solutions
10360 Ellison Circle
Omaha, Nebraska 68134
P (402) 991-5520

Calibre Calibre Engineering
9090 S Ridgeline Blvd #105
Highlands Ranch, CO 80129
Phone:(303) 730-0434

STAMP

LICENSED ARCHITECT
RICHARD JOSEPH CARSON
C-35122
25 June 2021
REGISTRATION DATE
STATE OF CALIFORNIA

Office of Construction and Facilities Management

VA U.S. Department of Veterans Affairs

Drawing Title	Phase	Project Title	Project Number
EXIST. EXTERIOR PHOTOS, DEMO, PLAN VIEW, SECTION AND ELEVATION	CD SUBMITION	MITIGATE CAMPUS DRAINAGE	438-18-107
			Building Number: -
Approved:		Location: Sioux Falls VA Health Care System, SD	Drawing Number: A-101
		Issue Date: FEBRUARY 26, 2021 · Checked: RJO · Drawn: KRK	

VA FORM 08 - 6231

2/26/2021 1:37:00 PM

\\clhdc01\home\kirkw\R23-2020-08_SiouxFallsDrainage_kirkw\CENTRAL.rvt

GENERAL MECHANICAL SYMBOLS

SYMBOL	DESCRIPTION	ADDITIONAL REMARKS
#	SHEET NOTE	DENOTES SPECIFIC REQUIREMENT FOR THE SHEET ON WHICH THE NOTE APPEARS AND IS USED TO DESCRIBE WORK THAT IS TOO LENGTHY TO PLACE ON PLAN.
	PIPING - SOLID LINE INDICATES SYSTEM SUPPLY -- DASHED LINE INDICATES SYSTEM RETURN	NUMBER INDICATES NOMINAL DIAMETER IN INCHES, LETTER(S) INDICATES SYSTEM. REFER TO ABBREVIATIONS FOR SYSTEM TYPE.
Ø	DIAMETER	
	DENOTES CONNECTION OF NEW WORK TO EXISTING SYSTEM	PROTECT EXISTING SYSTEM FROM ENTRANCE OF FOREIGN DEBRIS DURING WORK.
	ARROW INDICATES DIRECTION OF FLOW IN PIPING	
	ARROW INDICATES DOWNWARD PIPE SLOPE ## INDICATES SLOPE IN INCHES PER FOOT	WHERE PIPING IS NOT MARKED, REFER TO SPECIFICATIONS FOR REQUIREMENTS
	ISOLATION VALVE	REFER TO SPECIFICATIONS FOR TYPE BASED ON SIZE AND SYSTEM
	CHECK VALVE ARROW INDICATES DIRECTION OF NORMAL FLOW	REFER TO SPECIFICATIONS FOR TYPE BASED ON SIZE AND SYSTEM
	PIPE IN SLEEVE	REFER TO SPECIFICATIONS FOR TYPE BASED ON SIZE AND SYSTEM
	AUTOMATIC FLOW CONTROL VALVE # INDICATES FLOW TO BE BALANCED IN GPM	CIRCUIT SETTER, AUTOFLOW, ETC. REFER TO SPECIFICATIONS FOR TYPE BASED ON SIZE AND SYSTEM
	ELBOW UP ELBOW DOWN	
	TEE UP TEE DOWN TEE HORIZONTAL	
	PIPE REDUCER	INDICATES POINT WHERE PIPING CHANGES FROM ONE SIZE TO ANOTHER. SMALL POINT OF ARROW INDICATES SMALLER SIZE SIDE OF TRANSITION.
	UNION	
	Y STRAINER WITH BLOWDOWN	REFER TO SPECIFICATIONS FOR TYPE AND ACCESSORIES
	Y STRAINER	
	PRESSURE GAUGE	REFER TO SPECIFICATIONS FOR TYPE AND ACCESSORIES
	PRESSURE GAUGE STEAM	REFER TO SPECIFICATIONS FOR TYPE AND ACCESSORIES
	THERMOMETER - HORIZONTAL PIPE	REFER TO SPECIFICATIONS FOR TYPE AND ACCESSORIES
	THERMOMETER - VERTICAL PIPE	REFER TO SPECIFICATIONS FOR TYPE AND ACCESSORIES
	REQUIRED SERVICE CLEARANCE FOR EQUIPMENT	
	CONTINUATION	FIRST SYMBOL APPLIES TO ROUND DUCT AND PIPING. SECOND SYMBOL APPLIES TO RECTANGULAR AND OVAL DUCT.
	AIR VENT	
	BACKFLOW PREVENTER	
	CALIBRATED BALANCING VALVE	
	VALVE - THROTTLING SERVICE	
	VALVE - SHUTOFF SERVICE	
	P/T PORT	
	PIPE CAP	
	PIPE CONTINUATION	
	PRESSURE REDUCING VALVE	
	PUMP	
	RELIEF VALVE	
S	SENSOR	
	SUCTION DIFFUSER	
	VACUUM BREAKER	
	STEAM TRAP	

GENERAL ABBREVIATIONS

NOT ALL ABBREVIATIONS APPLY TO THIS SET OF DOCUMENTS

ABBREVIATION	DESCRIPTION	ABBREVIATION	DESCRIPTION
AD	ACCESS DOOR/PANEL	MAX	MAXIMUM
AFF	ABOVE FINISHED FLOOR	MC	MECHANICAL CONTRACTOR
AMB	AMBIENT	MFR	MANUFACTURER
BOB	BOTTOM OF BEAM	MIN	MINIMUM
DIA	DIAMETER	NIC	NOT IN CONTRACT
DN	DOWN	NTS	NOT TO SCALE
E	EXISTING	PC	PLUMBING CONTRACTOR
EC	ELECTRICAL CONTRACTOR	PSIG	POUNDS PER SQUARE INCH GAUGE
EFF	EFFICIENCY	RPM	REVOLUTIONS PER MINUTE
FPM	FEET PER MINUTE	SHT	SHEET
FPS	FEET PER SECOND	TOB	TOP OF BEAM
GC	GENERAL CONTRACTOR	TOS	TOP OF STEEL
GPM	GALLONS PER MINUTE	VEL	VELOCITY
L	LENGTH	VFD	VARIABLE FREQUENCY DRIVE
LF	LINEAR FEET		

PLUMBING ABBREVIATIONS

NOT ALL ABBREVIATIONS APPLY TO THIS SET OF DOCUMENTS

ABBREVIATION	DESCRIPTION	ABBREVIATION	DESCRIPTION
BF	BOTTLE/GLASS FILLER	HB	HOSE BIB
BFP	BACK FLOW PREVENTER	HD	HUB DRAIN
BT	BATH TUB	HP	HORSEPOWER
CA	COMPRESSED AIR (NON-MEDICAL)	L	LAVATORY
CD	CONDENSATE DRAIN	LPG	PROPANE
CO	CLEANOUT	LWT	LEAVING WATER TEMPERATURE
CP	CONDENSATE PUMP	MBH	BTU (1000'S)
CS	CLINICAL SINK	MS	MOP SINK
CV	CHEMICAL VENT	NC	NORMALLY CLOSED
CW	CHEMICAL WASTE	NO	NORMALLY OPEN
DCW	DOMESTIC COLD WATER	NPW	NON-POTABLE WATER
DF	DRINKING FOUNTAIN	PIV	POST INDICATOR VALVE
DGCO	DOUBLE GRADE CLEANOUT	PRV	PRESSURE REDUCING VALVE
DHW	DOMESTIC HOT WATER	RD	ROOF DRAIN
DHWC	DOMESTIC HOT WATER CIRCULATION	RO	REVERSE OSMOSIS WATER
DI	DEIONIZED WATER	RPZ	REDUCED PRESSURE ZONE (BACK FLOW PREVENTER)
DIC	DEIONIZED WATER CIRCULATING	S	SINK
DIH	DEIONIZED HOT WATER	SAN	SANITARY SEWER
DIHC	DEIONIZED HOT WATER CIRCULATING	SCW	DOMESTIC SOFT COLD WATER
DIS	DISTILLED WATER	SHW	DOMESTIC SOFT HOT WATER
DISC	DISTILLED WATER CIRCULATING	SHWC	DOMESTIC SOFT HOT WATER CIRCULATING
DR	DIALYSIS WATER RETURN	SE	SEWAGE EJECTOR
DS	DIALYSIS WATER SUPPLY	SH	SHOWER
DSN	DOWN SPOUT NOZZLE	SO	STORM OVERFLOW
DT	DRAIN TILE	SP	SUMP PUMP
EEW	EMERGENCY EYE WASH	SS	SERVICE SINK
ES	EMERGENCY SHOWER	ST	STORM SEWER
ESEW	EMERGENCY SHOWER AND EYE WASH COMBO	TEMP	TEMPERATURE
ET	EXPANSION TANK	UR	URINAL
EWC	ELECTRIC WATER COOLER	V	VENT
EWT	ENTERING WATER TEMPERATURE	VTR	VENT THROUGH ROOF
F	FILTER	WB	WALL BOX
FCO	FLOOR CLEANOUT	WC	WATER CLOSET
FD	FLOOR DRAIN	WCO	WALL CLEANOUT
FS	FLOOR SINK	WH	WATER HEATER
G	NATURAL GAS	WS	WATER SOFTENER
GCO	GRADE CLEANOUT	WPD	WATER PRESSURE DROP
GV	GREASE VENT	YCO	YARD CLEANOUT
GW	GREASE WASTE		

PLUMBING SYMBOLS

SYMBOL	DESCRIPTION	ADDITIONAL REMARKS
	PIPING - SINGLE DASH INDICATES DOMESTIC COLD WATER - DOUBLE DASH INDICATES DOMESTIC HOT WATER - TRIPLE DASH INDICATES HOT WATER CIRCULATING - SOLID INDICATES SANITARY ABOVE FLOOR - CONTINUOUS DASHED INDICATES VENT - LONG DASHED LINES INDICATE SANITARY BELOW FLOOR	NUMBER INDICATES NOMINAL DIAMETER IN INCHES, LETTER(S) INDICATES SYSTEM. REFER TO ABBREVIATIONS FOR SYSTEM TYPE.
#"RD #SF	ROOF DRAIN TAG INDICATES DRAIN SIZE IN INCHES AND AREA OF ROOF DRAINED IN SQUARE FEET	REFER TO PLUMBING FIXTURE SCHEDULE FOR TYPE.
#"DSN #SF	WALL DISCHARGE (DOWNSPOUT NOZZLE) TAG INDICATES DRAIN SIZE IN INCHES AND AREA OF ROOF DRAINED IN SQUARE FEET	REFER TO PLUMBING FIXTURE SCHEDULE FOR TYPE.
FD-#	FLOOR DRAIN	REFER TO PLUMBING FIXTURE SCHEDULE FOR TYPE.
C.O. C.O.	CLEANOUT	CIRCLE INDICATES UP TO FLOOR OR WALL CLEANOUT. LINE INDICATES END OF PIPE CLEANOUT LOCATED ABOVE A CEILING.
	DOUBLE GRADE CLEANOUT	REFER TO DETAILS FOR ADDITIONAL REQUIREMENTS.

MECHANICAL GENERAL NOTES:

A. THESE NOTES APPLY TO ALL SHEETS CONTAINING PLUMBING AND TEMPERATURE CONTROLS WORK. REFER TO PROJECT SPECIFICATIONS FOR ADDITIONAL REQUIREMENTS. WHERE A DISCREPANCY EXISTS BETWEEN THESE PLANS AND THE PROJECT SPECIFICATIONS, THE SPECIFICATION REQUIREMENTS SHALL TAKE PRECEDENCE OVER THE DRAWINGS.

B. VERIFY THE EXISTING CONDITIONS AT THE PROJECT SITE BEFORE SUBMITTING COST PROPOSAL. BE ADVISED THAT LOCATIONS SHOWN ARE APPROXIMATE. AN ATTEMPT HAS BEEN MADE TO SHOW ALL PIPING, FIXTURES, DUCTWORK, AND OUTLETS. CONTRACTOR SHALL VISIT THE SITE TO VERIFY COMPONENTS, LOCATIONS AND SIZES SHOWN OR NOT SHOWN. ALL COMPONENTS NEED TO BE REMOVED IN THE DEMOLITION AREA UNLESS NOTED ON THE DRAWINGS. IF DEVIATION BETWEEN EXISTING CONDITIONS AND NEW WORK IS FOUND, CONTRACTOR SHALL NOTIFY ENGINEER.

C. IT IS MANDATORY THAT THE EXISTING BUILDING REMAIN IN CONTINUOUS AND NON-INTERRUPTED OPERATION DURING THE CONSTRUCTION OF THE ADDITIONS AND REMODELING/ALTERATION OF THE EXISTING BUILDING. SERVICES TO THE EXISTING BUILDING SHALL BE KEPT ON CONTINUOUS OPERATION EXCEPT DURING SCHEDULED SHUTDOWNS FOR EXTENSION OR MODIFICATION. PLAN TO COMPLETE SHUTDOWNS DURING OFF HOURS TO MINIMIZE IMPACT TO THE OWNER. COORDINATE SHUTDOWNS WITH THE OWNER A MINIMUM OF 14 DAYS PRIOR TO WORK. PROVIDE TEMPORARY SERVICES WHERE NECESSARY TO ACCOMPLISH ANY SHUTDOWN. TEMPORARY MEASURES SHALL NOT BE REMOVED UNTIL THE PERMANENT SYSTEMS ARE OPERATIONAL AND HAVE PASSED ALL REQUIRED TESTING.

D. REFER TO THE SPECIFICATIONS AND ARCHITECTURAL PLANS FOR PHASING REQUIREMENTS. DURING EACH PHASE THE CONTRACTOR SHALL COMPLETE ALL WORK LOCATED WITHIN THE BOUNDARY OF THAT PHASE. ANY WORK AND THAT MUST BE COMPLETED IN THE AREA AFTER THAT AREA HAS BEEN TURNED OVER TO THE OWNER SHALL BE IDENTIFIED AT THE BEGINNING OF THE PHASE FOR EVALUATION AND ACCEPTANCE OF THE OWNER.

E. CONTRACTOR SHALL BE RESPONSIBLE FOR THEIR OWN DEMOLITION, REMOVAL, CAPPING, STORING, ABANDONING, DISCONNECTING, RELOCATING AND RECONNECTION OF EXISTING EQUIPMENT AND MATERIAL. ALL CUTTING, PATCHING, REPAIRING, REPLACEMENT AND REFINISHING SHALL MATCH THE EXISTING CONSTRUCTION AS NEARLY AS POSSIBLE.

F. EXCEPT WHERE OTHERWISE SHOWN OR NOTED ON THE DRAWINGS AS "TO BE RETAINED, RELOCATED", ALL EXISTING EQUIPMENT AND MATERIAL IN AREAS TO BE REMODELED/ALTERED SHALL BE REMOVED WHERE THEY INTERFERE WITH PROPOSED NEW CONSTRUCTION AND/OR WITH PROPOSED USAGE OF SPACE BY OWNER AS FOLLOWS:
   a. REMOVE ANY PIPING PROTRUDING ABOVE FINISHED FLOOR OR THROUGH WALL AND CAP AT THE NEAREST ACTIVE MAIN WITH MATERIAL TO MATCH EXISTING.
   b. REMOVE ALL EQUIPMENT, FIXTURES, CARRIERS, SUPPLY AND WASTE AND VENT PIPING AS NOTED. CAP AT NEAREST ACTIVE MAIN. SUPPLY AND RETURN MAINS ON PIPING SYSTEMS CONVEYING WATER OR GASES SHALL BE VALVED AND CAPPED
   c. IN REMODELED/ALTERED AREAS, ANY PIPING OR DUCTWORK PASSING THROUGH THE REMODELED AREAS TO SERVE (OR BEING SERVED FROM EXISTING ADJACENT, REMOTE, OR SURROUNDING AREAS THAT ARE TO REMAIN) SHALL BE RETAINED AND KEPT OPERATIONAL AND SHALL BE REROUTED IN ALL CASES WHERE THEY INTERFERE WITH ANY NEW WORK OR USAGE TO BE ACCOMPLISHED IN THE REMODELED AREA.
   d. REMOVE UNUSED OR ABANDONED HANGERS AND PATCH ABANDONED PENETRATIONS TO MATCH EXISTING.
   e. PENETRATIONS THROUGH EXISTING WALLS AND FLOORS FORMERLY OCCUPIED BY REMOVED PIPING OR DUCTWORK SHALL BE PATCHED TO MATCH EXISTING CONSTRUCTION.
   f. RE-SUPPORT ANY PIPING AND DUCTWORK THAT WAS SUPPORTED FROM BUILDING ELEMENTS REMOVED AS PART OF THE WORK.
   g. MAINTAIN CONTROL WIRING REQUIRED FOR THE CONTINUED PROPER OPERATION OF THE BUILDING AUTOMATION SYSTEM.

G. ALL EXISTING EQUIPMENT BEING REMOVED WILL BE HANDED OVER TO OWNER FOR FIRST RIGHT OF SALVAGE. IF OWNER REFUSES SALVAGE ITEMS, REMOVING CONTRACTOR SHALL BE RESPONSIBLE FOR DISPOSAL.

H. CONTRACTOR SHALL REFER TO THE DRAWINGS OF ALL TRADES TO FAMILIARIZE THEMSELVES WITH EXTENT OF WORK INCLUDING BUT NOT LIMITED TO WHERE NEW PARTITIONING IS BEING INSTALLED, WHERE EXISTING PARTITIONING IS BEING REMOVED, WHERE CEILINGS ARE BEING REMOVED AND/OR REPLACED, ETC.

I. THESE DRAWINGS ARE NECESSARILY DIAGRAMMATIC IN NATURE. NOT ALL FITTINGS, OFFSETS, VENTS OR DRAINS ARE SHOWN. THE CONTRACTOR SHALL INCLUDE ALL FITTINGS, OFFSETS, VENTS, DRAINS, AND DEVICES REQUIRED TO PROVIDE A COMPLETE AND FUNCTIONING SYSTEM.

J. PROVIDE ACCESS DOORS IN ARCHITECTURAL ELEMENTS WHERE REQUIRED TO ACCESS ALL EQUIPMENT REQUIRING MAINTENANCE AND ADJUSTMENT. THIS EQUIPMENT INCLUDES BUT IS NOT LIMITED TO SENSORS, ACTUATORS, CONTROL DEVICES, VALVES, ETC. ACCESS DOORS SHALL BE SIZED TO PROVIDE APPROPRIATE ACCESS BASED ON HEIGHT OF ACCESS REQUIRED AND ACTIVITY. INSTALL SUCH THAT ACCESS DOOR IS FULLY OPERABLE WITHOUT THE REMOVAL OF ARCHITECTURAL ELEMENTS SUCH AS CEILING RUNNERS, SUPPORTS, ETC. INSTALL IN A LOCATION SUCH THAT STEPPING OR LEANING OVER PERMANENT EQUIPMENT OR FURNITURE IS NOT REQUIRED. WHERE ACCESS DOORS ARE REQUIRED IN ARCHITECTURAL ELEMENTS THAT PROVIDE A FIRE AND/OR SMOKE RATING, ACCESS DOOR SHALL MAINTAIN THE REQUIRED RATING.

K. PIPING SHALL NOT BE ROUTED OVER ELECTRICAL AND TELECOM ROOMS. WHERE ROUTING OVER SUCH ROOMS IS UNAVOIDABLE, CONTRACTOR SHALL COORDINATE WITH OWNER, DESIGN TEAM, AHJ, AND OTHER TRADES REGARDING LOCATION OF PANELS AND UTILITY ROUTING AND SHALL PROVIDE DRIP PANS UNDER ALL UTILITIES WITH MOISTURE SENSORS OR DRAIN PIPING AS REQUIRED BY THE SPECIFICATIONS.

L. REMOVAL AND REINSTALLATION OF CEILINGS REQUIRED FOR THE COMPLETION OF WORK IS THE RESPONSIBILITY OF THE CONTRACTOR. CONTRACTOR SHALL REPAIR OR REPLACE ALL DAMAGED CEILING COMPONENTS TO MATCH EXISTING. WHERE AN IDENTICAL MATCH IS NO LONGER AVAILABLE, CONTRACTOR SHALL PROVIDE A SIMILAR REPLACEMENT UPON APPROVAL FROM THE OWNER.

M. LOCATE PIPING IN EXTERIOR BUILDING WALLS ON THE WARM SIDE OF THE BUILDING AND VAPOR BARRIER. COORDINATE INSTALLATION OF BUILDING INSULATION TO RUN CONTINUOUS BETWEEN PIPING AND BUILDING WALL.

N. SUPPORT ALL PIPING AND EQUIPMENT FROM BUILDING STRUCTURE MEMBERS. HOLD PIPING TIGHT TO BOTTOM OF STRUCTURAL MEMBERS OR RUN THROUGH JOIST WEBS IF POSSIBLE. DO NOT USE WIRE OR PERFORATED METAL TO SUPPORT PIPING. DO NOT SUPPORT PIPING FROM OTHER PIPING, DUCTWORK, AND/OR ELECTRICAL CONDUITS. SUPPORT FROM BOTTOM CHORD OF BAR JOISTS ONLY AT PANEL POINTS. ALL COMPONENTS REQUIRING MAINTENANCE SHALL BE SUPPORTED IN SUCH A MANNER AS TO BE READILY ACCESSIBLE WITHOUT REMOVAL OF THE CEILING SYSTEM AND TO ALLOW FOR REMOVAL FROM THE SYSTEM WHEN SUCH REMOVAL IS REQUIRED FOR MAINTENANCE.

O. PROTECT ALL PIPING DURING CONSTRUCTION. REFER TO SPECIFICATIONS FOR ADDITIONAL INFORMATION. AT A MINIMUM, PIPING ENDS SHALL BE COVERED AND SEALED TO PREVENT THE COLLECTION OF DUST AND DEBRIS. CLEAN ALL INTERIOR SURFACES PRIOR TO INSTALLATION AND PROTECT ONCE INSTALLED.

P. AT THE COMPLETION OF WORK, CLEAN ALL STRAINERS PROVIDED AS A PART OF THE WORK AS WELL AS PRIMARY SYSTEM STRAINERS LOCATED AT PUMPS WHERE SYSTEMS WERE EXTENDED. ON EXISTING EQUIPMENT, COORDINATE WORK WITH OWNER.

Q. PROVIDE INTERMEDIATE TESTING AND BALANCING AT THE COMPLETION OF EACH PHASE AND AS REQUIRED TO MAINTAIN PROPER OPERATION OF SYSTEMS SERVING OCCUPIED AREAS OF THE FACILITY.

R. UNLESS NOTED OTHERWISE, DETAILS SHOWN WITHIN THESE DOCUMENTS ARE APPLICABLE FOR ALL PIPING, EQUIPMENT AND DUCTWORK INSTALLATIONS WHETHER OR NOT SPECIFICALLY NOTED.

S. REFER TO SCHEDULES FOR SIZES OF FINAL RUNOUTS TO EQUIPMENT. FINAL RUNOUT SIZES LISTED SHALL BE USED TO WITHIN 10 EQUIVALENT DIAMETERS OF FINAL CONNECTION POINT. FINAL PIPING CONNECTION TO EQUIPMENT SHALL MATCH EQUIPMENT CONNECTION SIZE, PROVIDE TRANSITIONS AS REQUIRED. REFER TO DETAILS, DIAGRAMS AND SCHEMATICS FOR ADDITIONAL FINAL CONNECTION REQUIREMENTS.

T. FOR ALL PIPING, CONDUIT, AND OTHER ITEMS PENETRATING A FIRE RATED WALL, PROVIDE U.L. LISTED THROUGH PENETRATION FIRE STOPPING SYSTEM THAT IS SPECIFIC TO THE WALL CONSTRUCTION ASSEMBLY AND COMPLIANT WITH ASTM E814. INSTALL SYSTEM IN STRICT COMPLIANCE WITH THE FIRE STOPPING MANUFACTURER'S U.L. APPROVED DETAIL. WHERE EXISTING WALLS ARE BEING UPGRADED TO FIRE RATED WALLS OR THE FIRE RATING IS BEING MODIFIED, PROVIDE U.L. LISTED THROUGH PENETRATION FIRE STOPPING SYSTEM FOR ALL NEW AND EXISTING PENETRATIONS. REFER TO THE ARCHITECTURAL LIFE SAFETY PLANS FOR LOCATIONS OF FIRE RATED WALLS.

Revisions: | Date:

ARCHITECT/ENGINEER OF RECORD

CLH Calvin L. Hinz Architects, P.C.
Calvin L. Hinz Architects, P.C.
3705 North 200th Street
Elkhorn, Nebraska 68022
Phone: 402.291.6941 Fax: 402.291.9193

SPECIALIZED ENGINEERING SOLUTIONS
Specialized Engineering Solutions
10360 Ellison Circle
Omaha, Nebraska 68134
P (402) 991-5520

Shaffer & Stevens
9910 North 48th Street
Omaha, Nebraska68152
Phone: 402.455.7698 Fax: 402.455.7597

Calibre
Calibre Engineering
9090 S Ridgeline Blvd #105
Highlands Ranch, CO 80129
Phone:(303) 730-0434

STAMP

REGISTERED PROFESSIONAL ENGINEER
REG. NO. 10229
ERIC G. SHERMAN
SOUTH DAKOTA
02/26/2021

Office of Construction and Facilities Management

VA U.S. Department of Veterans Affairs

Drawing Title: MECHANICAL SYMBOLS AND ABBREVIATIONS

Approved:

Phase: CD SUBMISSION

Project Title: Mitigate Campus Drainage

Location: Sioux Falls VA Health Care System, SD

Issue Date: February 26, 2021 | Checked: FEG | Drawn: SMC

Project Number: 438-18-107

Building Number: 8

Drawing Number: M000

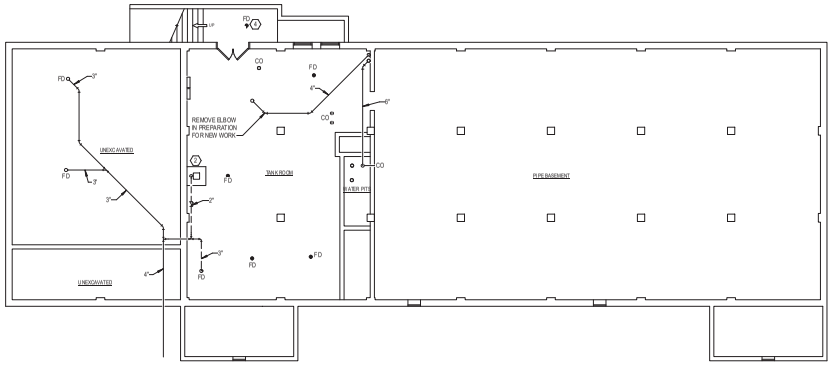

1 BASEMENT - PLUMBING - DEMOLITION
1/8" = 1'-0"

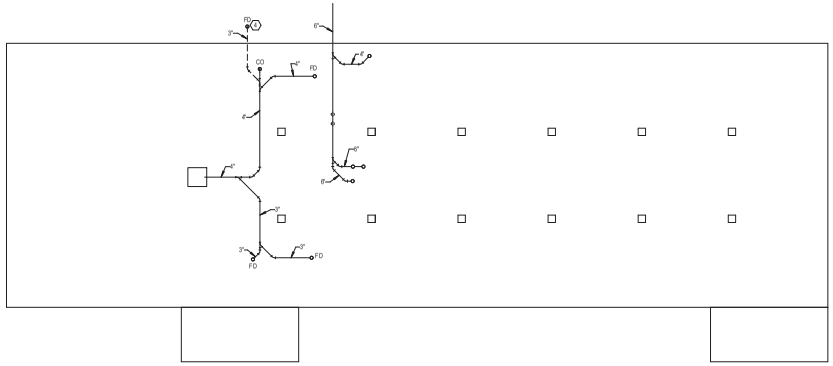

2 UNDERFLOOR - PLUMBING - DEMOLITION
1/8" = 1'-0"

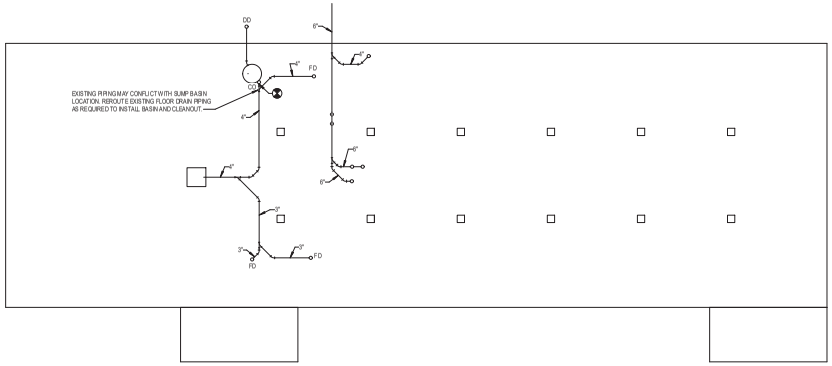

3 UNDERFLOOR - PLUMBING
1/8" = 1'-0"

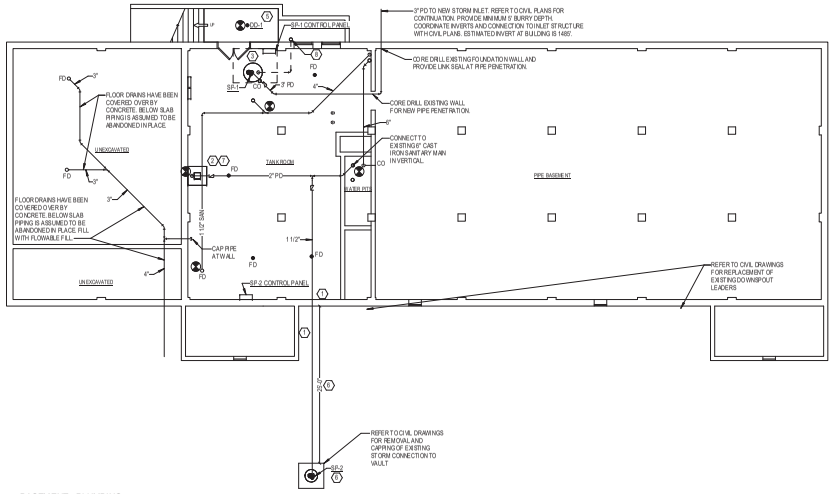

4 BASEMENT - PLUMBING
1/8" = 1'-0"

GENERAL NOTES:

1. COVER SHEET GENERAL NOTES APPLY TO ALL SHEETS.
2. ON DEMOLITION PLANS, EXISTING MECHANICAL SYSTEMS TO BE REMOVED ARE SHOWN DASHED. EXISTING MECHANICAL SYSTEMS TO REMAIN ARE SHOWN LIGHT LINE WEIGHT. ON ALL OTHER PLANS, NEW MECHANICAL SYSTEMS ARE INDICATED WITH HEAVY LINE WEIGHTS.
3. UNLESS NOTED OTHERWISE, DETAILS SHOWN WITH THESE DOCUMENTS ARE APPLICABLE FOR ALL PIPING, EQUIPMENT AND DUCTWORK INSTALLATIONS WHETHER OR NOT SPECIFICALLY NOTED.
4. THE OWNER AND ENGINEER ARE NOT RESPONSIBLE FOR THE CONTRACTOR'S SAFETY PRECAUTIONS OR FOR THE MEANS, METHODS, TECHNIQUES, CONSTRUCTION SEQUENCES, OR PROCEDURES REQUIRED TO PERFORM THIS WORK.

SHEET NOTES:

1. PATCH OPENING FROM STEAM TRENCH TO BUILDING. PATCH SHALL BE WATER TIGHT. WHERE PIPES PENETRATE THE OPENING, PROVIDE SLEEVES AND LINK SEALS FOR EACH PIPE. KNOWN PIPING LEAVING THE STEAM TRENCH INCLUDE: 2" HIGH PRESSURE STEAM, 2.5" GRAVITY CONDENSATE RETURN, AND TWO 1.5" AIR COMPRESSOR INTAKES. REINSULATE PIPING TO MATCH EXISTING CONDITIONS WHERE INSULATION MUST BE REMOVED TO INSTALL PENETRATION SEALS.
2. DISCONNECT DISCHARGE PIPING FROM EXISTING SUMP PUMP AND REROUTE DISCHARGE TO EXISTING SANITARY PIPING AS SHOWN.
3. REMOVE AND REPLACE CONCRETE AS REQUIRED TO INSTALL NEW DRAIN, PIPING AND SUMP. CORE DRILL OR SLEEVE UNDER FOUNDATION WALL AS REQUIRED. REFER TO STRUCTURAL DRAWINGS FOR REQUIREMENTS OF REMOVAL AND REINSTALLATION OF SLAB AT WALL CONNECTION. EXACT LOCATION OF SUMP BASIN SHALL BE A MINIMUM OF 2 FEET FROM THE EXISTING FOOTING.
4. REMOVE EXISTING AREA DRAIN AND PIPING TO MAIN AND CAP. REMOVAL OF SLAB SHALL BE LIMITED TO THE IMMEDIATE AREA OF THE EXISTING DRAIN AND SHALL BE COORDINATED WITH STRUCTURAL SO AS NOT TO COMPROMISE EXISTING STRUCTURAL SLAB.
5. INSTALL NEW PROMENADE DRAIN AT EXISTING DRAIN LOCATION AND PATCH PAVEMENT TO MATCH EXISTING. REMOVAL OF SLAB SHALL BE LIMITED TO THE IMMEDIATE AREA OF THE EXISTING DRAIN AND SHALL BE COORDINATED WITH STRUCTURAL SO AS NOT TO COMPROMISE EXISTING STRUCTURAL SLAB. REMOVE NONSTRUCTURAL CONCRETE TOPPING OF STAIR BASE AND REPOUR AT DEPTH REQUIRED TO MAINTAIN UNIFORM STAIR TREAD AFTER INSTALLATION OF GRIP-LOC TILES. INSTALL GREY RAISED GRIP-LOC TILES OVER ENTIRE FLOOR AREA AT BASE OF STAIRS.
6. INSTALL NEW DEWATERING SUMP AND PUMP IN EXISTING STEAM VAULT. REFER TO STRUCTURAL DRAWINGS FOR LOCATION OF SUMP IN STRUCTURAL FLOOR. HARD PIPE DISCHARGE THROUGH PIPE TRENCH INTO BUILDING AND DISCHARGE INTO PUMPED DISCHARGE. PROVIDE CORE DRILL AND LINK SEAL AT BUILDING WALL PENETRATION.
7. PROVIDE DOCUMENTATION OF EXISTING SUMP PUMP STATUS AND PROVIDE NEW WATER DETECTOR ON FLOOR OF MECHANICAL ROOM.
8. PROVIDE 2" VENT FROM SUMP PIT UP. EXTEND A MINIMUM OF 18" ABOVE FD OF LEVEL. PAINT TO MATCH BUILDING OR PER OWNER DIRECTION.

Revisions:	Date:

ARCHITECT/ENGINEER OF RECORD

CLH Calvin L. Hinz Architects, P.C.
3705 North 200th Street
Elkhorn, Nebraska 68022
Phone: 402.291.6941 Fax: 402.291.9193

Shaffer & Stevens
9910 North 48th Street
Omaha, Nebraska 68152
Phone: 402.455.5686 Fax: 402.455.5597

SES Specialized Engineering Solutions
Specialized Engineering Solutions
10360 Elkhorn Circle
Omaha, Nebraska 68134
P (402) 991-5520

Calibre Engineering
9090 S Ridgeline Blvd #105
Highlands Ranch, CO 80129
Phone:(303) 730-0434

STAMP

REGISTERED PROFESSIONAL ENGINEER
HEATH EDWARD GERHARD SHERMAN
NEBRASKA
E20080021

Office of Construction and Facilities Management

VA U.S. Department of Veterans Affairs

Drawing Title	Phase	Project Title	Project Number
FLOOR PLANS - PLUMBING	CD SUBMISSION	Mitigate Campus Drainage	438-18-107
			Building Number: 8
Approved:		Location: Sioux Falls VA Health Care System, SD	Drawing Number: PP200
		Issue Date: February 26, 2021 / Checked: FEG / Drawn: SMC	

VA FORM 08 - 6231

BIM 360://200335_005_VA_SF_Bldg 8 Mitigate Campus Drainage/200335_005_VA_SF_Bldg 8 Mit Dwgs_SES_2020.rvt

2/22/2021 11:31:03 AM

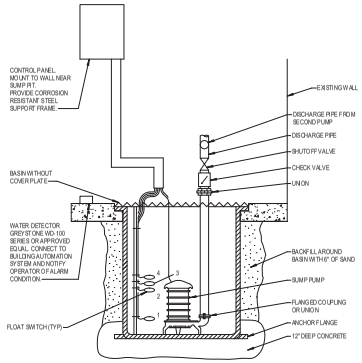

NOTES:
1. PUMPS OFF, MAINTAIN WATER ABOVE INLETS AS REQUIRED PER PUMP MANUFACTURER
2. START PRIMARY PUMP WHEN WATER LEVEL IS 9" BELOW SUMP RIM INVERT.
3. START SECONDARY PUMP WHEN WATER LEVEL IS 6" BELOW SUMP RIM INVERT.
4. ALARM WHEN WATER LEVEL 3" BELOW SUMP RIM INVERT.

1 SUMP PUMP
NO SCALE

PUMP SCHEDULE

MARK	FLOW [GPM]	TOTAL HEAD [FT]	SHUT-OFF HEAD [FT]	TYPE OF FLUID	RPM	SUCTION / DISCHARGE SIZE [IN]	MAX IMPELLER DIAMETER [IN]	ELECTRICAL DATA				MANUFACTURER	MODEL	REMARKS
								HP	VOLTAGE	PHASE	SCCR			
SP-1	28.75	20	62	SANITARY	3,450	3"	-	0.5	208 V	1	5	ZOELLER	4262	(1)(2)(3)
SP-2	18.25	10	18	DEWATERING	3,450	1.5"	-	0.3	120 V	1	5	ZOELLER	49	(2)(3)(4)

REMARKS:
1. PROVIDE NEMA 4X CONTROL PANEL, MOTOR STARTERS, HIGH WATER ALARM, PUMP DISCONNECT, DOUBLE SEAL TYPE WITH STAINLESS STEEL SHAFT, BRONZE IMPELLER AND 36" DIAMETER BY 48" DEEP BASIN WITH GASKETED COVER.
2. PROVIDE INTERFACE WITH BUILDING AUTOMATION SYSTEM TO PROVIDE PUMP STATUS AND ALARM NOTIFICATION.
3. TOTAL HEAD ASSUMES ROUTING OF PIPE TO BOTTOM OF STRUCTURE PRIOR TO CONNECTION IF OTHER ROUTE IS CHOSEN, CONFIRM TOTAL HEAD REQUIRED TO ENSURE PROPER PUMP OPERATION.
4. PROVIDE NEMA 4X CONTROLS, MOTOR STARTER, HIGH WATER ALARM, PUMP DISCONNECT, AND 12" DIAMETER BY 16" DEEP BASIN WITH COVER AND OPENING FOR PIT DRAINAGE. COORDINATE BASIN WITH STRUCTURAL DRAWINGS FOR ADDITIONAL REQUIREMENTS.

PLUMBING FIXTURE SCHEDULE

MARK	TYPE	IMAGE	DESCRIPTION	PIPING CONNECTIONS			
				COLD WATER	HOT WATER	WASTE	VENT
DD-1	DECKDRAIN		DECKDRAIN - 10" DIAMETER HEAVY DUTY ADA TRACTOR GRATE WITH BOTTOM OUTLET, DUCO CAST IRON BODY, DOME BOTTOM STRAINER, AND FLASHING COLLAR, DEEP SEAL TRAP. OUTLET SIZE AS INDICATED ON DRAWINGS. JR SMITH MODEL 2080 OR APPROVED EQUAL.	-	-	3"	-

REMARKS:
1. REFER TO ARCHITECTURAL PLANS AND ELEVATIONS FOR ADDITIONAL REQUIREMENTS, ROUGH-IN DIMENSIONS, AND COORDINATION OF ACCESSORIES. FIXTURE MOUNTING LOCATIONS AND OPERATION OF FIXTURE SHALL NOT INTERFERE WITH ADJACENT ACCESSORIES OR THEIR OPERATION.
2. CONTRACTOR SHALL COORDINATE ALL FIXTURES WITH OTHER TRADES. ANY CONFLICTS OR ADJUSTMENTS SHALL BE BROUGHT TO THE IMMEDIATE ATTENTION OF THE ENGINEER.
3. COORDINATE DRAIN GRATE WITH FLOOR SLOPING AND FLOORING PATTERN FOR ALL FLOOR DRAINS, FLOOR SINKS, AND TRENCH DRAINS. DRAIN SHALL BE SET SUCH THAT DRAIN GRATE IS FLUSH WITH FINISHED FLOOR SURFACE AND COORDINATED WITH PATTERN. REFER TO ARCHITECTURAL PLANS AND DETAILS FOR ADDITIONAL INFORMATION.

Revisions:	Date:

ARCHITECT/ENGINEER OF RECORD

Calvin L. Hinz Architects, P.C.
3705 North 200th Street
Elkhorn, Nebraska 68022
Phone: 402.291.6941 Fax: 402.291.9193

Shaffer & Stevens
9910 North 48th Street
Omaha, Nebraska68152
Phone: 402.455.5698 Fax: 402.455.5597

Specialized Engineering Solutions
10360 Elkhorn Circle
Omaha, Nebraska 68134
P (402) 991-5520

Calibre Engineering
9090 S Ridgeline Blvd #105
Highlands Ranch, CO 80129
Phone:(303) 730-0434

STAMP

NEBRASKA LICENSED PROFESSIONAL ENGINEER
HEATH ERIC G. SHERMAN
20120602021

Office of Construction and Facilities Management

VA U.S. Department of Veterans Affairs

Drawing Title	Phase	Project Title	Project Number
PLUMBING SCHEDULES & DETAILS	CD SUBMISSION	Mitigate Campus Drainage	438-18-107
			Building Number: 8
Approved:		Location: Sioux Falls VA Health Care System, SD	Drawing Number: M600
		Issue Date: February 26, 2021 / Checked: FEG / Drawn: SMC	

BIM 360://20335.005_VA Sioux Falls Building 8 Mitigate Campus Drainage/20335_005_VA_IF_Bldg 8 Mit Drain_SES_2020.rvt

2/25/2021 11:31:03 AM

VA FORM 08 - 6231

ELECTRICAL GENERAL NOTES:
(GENERAL NOTES SHALL APPLY TO ALL SHEETS)

A. BRANCH CIRCUITS WITH A TOTAL LENGTH LONGER THAN 75' SHALL UTILIZE #10 AWG CONDUCTORS. RECEPTACLE BRANCH CIRCUITS WITH A TOTAL LENGTH LONGER THAN 150' SHALL UTILIZE #8 AWG CONDUCTORS.
B. FOR ALL CONDUIT AND OTHER ITEMS PENETRATING A FIRE RATED WALL, PROVIDE UL LISTED THROUGH PENETRATION FIRE STOPPING SYSTEM THAT IS SPECIFIC TO THE WALL CONSTRUCTION ASSEMBLY AND COMPLIANT WITH ASTM E814. INSTALL SYSTEM IN STRICT COMPLIANCE WITH THE FIRE STOPPING MANUFACTURER'S U.L. APPROVED DETAIL. WHERE EXISTING WALLS ARE BEING UPGRADED TO FIRE RATED WALLS OR THE FIRE RATING IS BEING MODIFIED, PROVIDE U.L. LISTED THROUGH PENETRATION FIRE STOPPING SYSTEM FOR ALL NEW AND EXISTING PENETRATIONS. REFER TO THE ARCHITECTURAL LIFE SAFETY PLANS FOR LOCATIONS OF FIRE RATED WALLS.
C. ANY ITEMS DAMAGED BY THE CONTRACTOR SHALL BE REPLACED BY THE CONTRACTOR, AT NO ADDITIONAL COST TO THE OWNER.
D. NEW WIRING DEVICES AND ASSOCIATED COVERPLATES SHALL MATCH EXISTING FINISH OF SIMILAR INSTALLED DEVICES.
E. THE SELECTED EQUIPMENT AIC RATINGS ARE BASED ON THE IMPEDANCES FOR CONDUCTORS AND TRANSFORMERS USED IN THE CALCULATIONS. IF DIFFERENT EQUIPMENT OR DIFFERENT CONFIGURATIONS ARE SELECTED FOR INSTALLATION, THE CONTRACTOR SHALL BE RESPONSIBLE FOR PROVIDING ADEQUATELY RATED EQUIPMENT THAT MEETS APPLICABLE SELECTIVE COORDINATION GOALS AND PROVIDES SIMILAR INCIDENT ENERGY RISK OF ARC FLASH HAZARDS.
F. PROVIDE ADDITIONAL SUPPORTS AS REQUIRED TO INDEPENDENTLY SUPPORT ALL EXISTING TO REMAIN CABLING.
G. REFER TO DETAILS, SCHEDULES, AND SYMBOL LEGENDS FOR ADDITIONAL REQUIREMENTS.

SHEET NOTES:

1. UTILIZE EXISTING CIRCUIT BREAKERS IN EXISTING PANELS INDICATED BELOW. PROVIDE NEW CIRCUIT BREAKERS TO MATCH EXISTING IN RATING AND TYPE AS NECESSARY TO ACCOMMODATE NEW CONSTRUCTION. FIELD COORDINATE EXACT CIRCUIT BREAKER REQUIREMENTS. CIRCUIT BREAKER NUMBERS ARE FOR REFERENCE ONLY. PROVIDE UPDATED AS-BUILT DRAWINGS TO OWNER WITH FINAL CIRCUIT BREAKER NUMBERS. EXISTING PANELS ARE THE FOLLOWING VOLTAGE, MANUFACTURER, AND MODEL:
   A. MDP-B: 208V, 3 PHASE, 4 WIRE; EATON

EQUIPMENT CONNECTION SCHEDULE

MARK	DESCRIPTION	HP	FLA	MCA	MOCP	VOLTS	PHASE	POLES	LOAD [VA]	CONTROL TYPE	DISCONNECT BY	DISCONNECT TYPE	FEEDER	PANEL	CIRCUIT NUMBER	SCCR	GEN	REMARKS
SP-1	SUMP PUMP	0.5	7.5	9.3	15	208	1	2	1560	INT	ELECTRICAL	30/2 NF	(2M2) (1/6 - 2 HP 208V) 2-#12 CU, #12 CU GND - 3/4"C.	MDP-B	1,3	10	No	1,2
SP-2	SUMP PUMP	0.3	4	5	15	120	1	1	450	INT	ELECTRICAL	REC/SW	(1M1) (1/6 - 1 HP 120V) 2-#12 CU, #12 CU GND - 3/4"C.	MDP-B	7	5	No	1,2

REMARKS: (EQUIPMENT CONNECTION SCHEDULE)
1. PROVIDE 120V 20A BRANCH CIRCUIT FROM EXISTING PANEL MDP-B FOR CONTROL POWER. PROVIDE WITH 30A, 1 POLE NON-FUSED LOCKABLE DISCONNECT SWITCH AT CONTROL PANEL CONNECTION POINT. REFER TO MECHANICAL DRAWINGS FOR CONTROL PANEL LOCATION.
2. PROVIDE ELECTRICAL CONNECTION INDICATED FROM SOURCE PANEL TO CONTROL PANEL. PROVIDE DISCONNECT AT CONTROL PANEL LOCATION. REFER TO MECHANICAL DRAWINGS FOR CONTROL PANEL LOCATION.

GENERAL NOTES: (EQUIPMENT CONNECTION SCHEDULE)
A. EQUIPMENT LISTED MAY NOT BE UNIQUE, VERIFY QUANTITY WITH FLOOR PLANS. WHERE LOCATIONS ARE NOT INDICATED ON ELECTRICAL FLOOR PLANS, REFER TO MECHANICAL SHEETS. REFER TO DEFINITIONS BELOW FOR CLARIFICATIONS OF CONNECTION REQUIREMENTS.
B. ITEMS NOTED AS "NA" ARE NOT APPLICABLE TO THE CONNECTION.
C. "CONTROL TYPE" - PROVIDE CONTROL AND CONNECTIONS:
   - "INT" = CONTROLS ARE MANUFACTURED INTEGRAL TO THE EQUIPMENT (SELF-CONTAINED).
   - "CONT" = EQUIPMENT OPERATES CONTINUOUSLY (NO CONTROLS). FOR MOTORS WITHOUT INTERNAL OVERLOAD PROTECTION, PROVIDE SEPARATE OVERLOAD PROTECTION. OVERLOAD PROTECTION MAY BE PROVIDED AS PART OF A MANUAL MOTOR STARTER.
   - "DDC" = CONTROL SIGNAL FROM TEMPERATURE CONTROL SYSTEM PROVIDED BY MECHANICAL CONTRACTOR OR TEMPERATURE CONTROLS CONTRACTOR.
   - "TIME SW" = CONTROL SIGNAL FROM TIME SWITCH PROVIDED BY ELECTRICAL CONTRACTOR.
     - TIME SWITCH SHALL BE 7-DAY DIGITAL TYPE WITH AUTOMATIC DAYLIGHT SAVINGS ADJUSTMENTS AND BATTERY BACKUP. LOCATE TIMESWITCH IN NEAREST MECHANICAL OR ELECTRICAL UTILITY ROOM. LABEL TIME SWITCH. COORDINATE TIME SCHEDULE WITH OWNER AND MECHANICAL ENGINEER.
   - "WALL SW" = CONTROL SIGNAL FROM WALL SWITCH PROVIDED BY ELECTRICAL CONTRACTOR.
     - COORDINATE LOCATION OF WALL SWITCH WITH OWNER. LABEL WALL SWITCH.
   - "DATA" = PROVIDE WITH DATA CONNECTION FROM NEAREST DATA NETWORK COMMUNICATIONS ROOM.
   - "CONDUIT" = PROVIDE EMPTY 3/4" CONTROLS CONDUIT BETWEEN INDOOR AND OUTDOOR UNIT TO ACCOMMODATE CONTROL CABLING BY MECHANICAL OR TEMPERATURE CONTROLS CONTRACTOR.
D. "DISCONNECT BY":
   - "MECHANICAL" = DISCONNECT IS FURNISHED BY MECHANICAL CONTRACTOR OR PROVIDED WITH MECHANICAL EQUIPMENT.
     - ELECTRICAL CONTRACTOR SHALL PROVIDE MOUNTING AND ADDITIONAL CONNECTIONS REQUIRED FOR LOOSE DISCONNECTS FURNISHED BY THE MECHANICAL CONTRACTOR.
   - "ELECTRICAL" = DISCONNECT IS FURNISHED BY ELECTRICAL CONTRACTOR. COORDINATE EXACT REQUIREMENTS WITH EQUIPMENT FURNISHED BY MECHANICAL CONTRACTOR.
   - "MANUFACTURER" = DISCONNECT IS FURNISHED BY EQUIPMENT MANUFACTURER. ELECTRICAL CONTRACTOR SHALL PROVIDE MOUNTING AND ADDITIONAL CONNECTIONS REQUIRED FOR LOOSE DISCONNECTS FURNISHED BY EQUIPMENT MANUFACTURER.
E. "DISCONNECT TYPE" - PROVIDE DISCONNECT/RECEPTACLE AT EQUIPMENT LOCATION AND ASSOCIATED CONNECTION TO EQUIPMENT AND BRANCH CIRCUIT:
   - "NEMA-___" = DUPLEX (TYP) RECEPTACLE TO ACCOMMODATE CORD AND PLUG CONNECTION (CORD AND PLUG FURNISHED WITH EQUIPMENT UNLESS NOTED OTHERWISE)
   - "REC/SW" = PROVIDE 20A 120V RECEPTACLE OR 20A TOGGLE SWITCH DISCONNECT.
     - COORDINATE REQUIRED SELECTION WITH EQUIPMENT.
   - "NF" = NON-FUSED DISCONNECT. SIZE AND POLE QUANTITY AS INDICATED. 20/1 AND SMALLER SHALL BE TOGGLE SWITCH DISCONNECT.
   - "F" = FUSED DISCONNECT. SIZE AND POLE QUANTITY AS INDICATED.
     - FUSE PER MANUFACTURER'S RECOMMENDATIONS.
   - LOCATE DISCONNECT ADJACENT TO EQUIPMENT PER NEC - PROVIDE WITH STRUT MOUNTING AS REQUIRED.
   - LOCATE RECEPTACLE OR JUNCTION BOX TO DIRECTLY SERVE EQUIPMENT.
     - COORDINATE EXACT LOCATION WITH ARCHITECT, ARCHITECTURAL DETAILS, AND EQUIPMENT MANUFACTURER'S REQUIREMENTS.
   - WHERE DISCONNECT SERVES OUTDOOR EQUIPMENT, PROVIDE AS NEMA-3R.
   - PROVIDE DISCONNECT WITH EQUIPMENT GROUND KIT.
   - WHERE FEEDER INDICATED UTILIZES A NEUTRAL, PROVIDE DISCONNECT WITH SOLID NEUTRAL KIT.
   - WHERE FEEDER INDICATED UTILIZES AN ISOLATED GROUND, PROVIDE DISCONNECT WITH ADDITIONAL INSULATED GROUND KIT.
   - DISCONNECTS NOT SHOWN AS "F" OR "NF" SHALL BE NON-FUSED.
   - DISCONNECTS OF MOTORS SERVED FROM A VFD SHALL CONTAIN AUXILIARY CONTACTS CONNECTED TO THE VFD TO DISABLE VFD UPON DISCONNECTION.
   - WHERE STARTERS OR VFD'S CONTAIN INTEGRAL DISCONNECTS AND ARE LOCATED PER NEC TO SATISFY AS THE EQUIPMENT DISCONNECT, AN ADDITIONAL EQUIPMENT DISCONNECT IS NOT REQUIRED.
F. "GEN" - EQUIPMENT IS SERVED FROM A SOURCE PANEL PROVIDED WITH GENERATOR BACK-UP.
G. "SCCR" - VALUE INDICATED IS AVAILABLE SHORT CIRCUIT CURRENT (SCC) IN KILOAMPS AT THE EQUIPMENT BASED ON PRELIMINARY DESIGN PHASE CALCULATIONS. EQUIPMENT SCCR SHALL BE MINIMUM 120% OF THE AVAILABLE SCC. RATING SHALL BE ADJUSTED IF REQUIRED BASED ON FINAL SCC CALCULATION. EQUIPMENT INDICATED WITH 5 KA MAY BE PROVIDED WITH 5 KA SCCR.

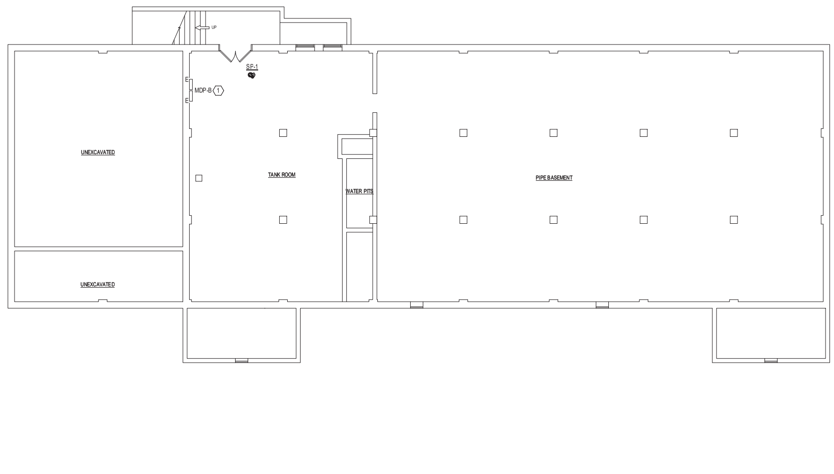

3 BASEMENT - POWER
1/8" = 1'-0"

ELECTRICAL ABBREVIATIONS

ABBREVIATION	DESCRIPTION
##"	MOUNTING HEIGHT TO CENTERLINE (ABOVE FINISHED FLOOR)
A	AMPERE
AF	AMPERE FRAME
AFF	ABOVE FINISHED FLOOR
AL	ALUMINUM
AT	AMPERE TRIP
C	CEILING
CB	CIRCUIT BREAKER
CCT	COLOR TEMP CONTROL
CU	COPPER
D	DATA (WHEN APPLIED TO COMMUNICATIONS OUTLET)
D	DEMO (WHEN APPLIED TO EXISTING/DEMO ITEMS)
E	EXISTING
EO	ELECTRICALLY OPERATED
ERMS	ENERGY REDUCING MAINTENANCE SWITCH
F	FUSE
FLA	FULL LOAD AMPS
G, GFCI	GROUND FAULT CIRCUIT INTERRUPTER
GFA	GROUND FAULT ALARM
GFP	GROUND FAULT PROTECTION
HP	HORSEPOWER
KAIC	KILOAMPERE INTERRUPTING CAPACITY
KVA	KILOVOLT AMPERE
KW	KILOWATT
MAX	MAXIMUM
MCA	MINIMUM CIRCUIT AMPS
MCB	MAIN CIRCUIT BREAKER
MIN	MINIMUM
MLO	MAIN LUGS ONLY
MO	MANUALLY OPERATED
NC	NORMALLY CLOSED
NF	NON-FUSED
NIC	NOT IN CONTRACT
NO	NORMALLY OPEN
P	POLES
PART	PARTIAL
R	RELOCATE
SCCR	SHORT CIRCUIT CURRENT RATING
SPD	SURGE PROTECTIVE DEVICE
ST	SHUNT TRIP
TYP	TYPICAL
UNO	UNLESS NOTED OTHERWISE
V	VOICE
W	WALL PHONE
W	WIRE
WR	WEATHER RESISTANT
XFMR	TRANSFORMER
ZSI	ZONE SELECTIVE INTERLOCKING

REFER TO OTHER SCHEDULES AND NOTES FOR ADDITIONAL ABBREVIATIONS.

ELECTRICAL MISC SYMBOLS

PLAN SYMBOL	NAME
	BRANCH CIRCUIT CONCEALED IN CEILING OR WALL
	BRANCH CIRCUIT CONCEALED IN FLOOR OR BELOW GRADE
	CLEARANCE SPACE
	CONDUIT BREAK
	CONDUIT DOWN
	CONDUIT STUB-OUT
	CONDUIT UP
	HOMERUN TO PANEL G = GFCI CIRCUIT (PART) = PARTIAL CIRCUIT

ELECTRICAL EQUIPMENT SYMBOLS

PLAN SYMBOL	NAME
	PANELBOARD - SURFACE

Revisions:	Date:

ARCHITECT/ENGINEER OF RECORD

Calvin L. Hinz Architects, P.C.
3705 North 200th Street
Elkhorn, Nebraska 68022
Phone: 402.291.6941 Fax: 402.291.9193

Shaffer & Stevens
9910 North 48th Street
Omaha, Nebraska68152
Phone: 402.455.7698 Fax: 402.455.7597

SPECIALIZED ENGINEERING SOLUTIONS
Specialized Engineering Solutions
10360 Ellison Circle
Omaha, Nebraska 68134
P (402) 991-5520

Calibre
Calibre Engineering
9090 S Ridgeline Blvd #105
Highlands Ranch, CO 80129
Phone:(303) 730-0434

STAMP

REGISTERED PROFESSIONAL ENGINEER 10206 TRACY J. HAUSER SOUTH DAKOTA 02/26/2021

Office of Construction and Facilities Management

VA U.S. Department of Veterans Affairs

Drawing Title ELECTRICAL SYMBOLS, SCHEDULES, AND PLANS

Approved:

Phase CD SUBMISSION

Project Title Mitigate Campus Drainage

Location Sioux Falls VA Health Care System, SD

Issue Date February 26, 2021 | **Checked** MJF | **Drawn** JMP

Project Number 438-18-107

Building Number 8

Drawing Number E000

VA FORM 08 - 6231

BIM 360://20335.005 - VA Sioux Falls Building 8 Mitigate Campus Drainage/20335_005_VA SF_Bldg 8 Mit Drain_SES_2020.rvt

2/25/2021 11:31:01 AM