U.S. FISH & WILDLIFE SERVICE

LONG LAKE NWR

NEW HEADQUARTERS AND VISITOR CENTER

CONSTRUCTION DOCUMENTS

SHEET #	SHEET NAME
C001	COVER SHEET
C002	CIVIL NOTES AND LEGEND
C101	DEMOLITION PLAN
C201	HORIZONTAL CONTROL PLAN
C301	CIVIL SITE PLAN
C401	GRADING PLAN
C402	GRADING DETAIL
C501	UTILITY PLAN
C502	UTILITY DETAILS
C503 TO C504	SITE DETAILS
C505	SITE PROFILES
C601	EROSION CONTROL PLAN
C602	EROSION CONTROL NOTES
C603	EROSION CONTROL DETAILS
A001	BUILDING CODE & LIFE SAFETY ANALYSIS
A101	GROUND FLOOR PLAN
A121	REFLECTED CEILING PLAN
A151	ROOF PLAN
A201	EXTERIOR ELEVATIONS
A301	BUILDING SECTIONS
A302	WALL SECTIONS
A401 TO A402	ENLARGED PLANS AND ELEVATIONS
A403	ENLARGED PLAN AND INTERIOR ELEVATIONS
A410	SIGNAGE DETAILS
A501	EXTERIOR DETAILS
A502 TO A504	DETAILS
A601	SCHEDULES
S101	GENERAL STRUCTURAL NOTES
S201	STRUCTURAL FOUNDATION PLAN
S301	STRUCTURAL FLOOR PLAN
S401	STRUCTURAL ROOF FRAMING PLAN
S501 TO S504	STRUCTURAL SECTIONS AND DETAILS
M001	MECHANICAL COVER SHEET
M002 TO M004	MECHANICAL SCHEDULES
M101	MECHANICAL HVAC PLAN
M102	MECHANICAL PIPING PLAN
M103	ROOF MECHANICAL PLAN
M104	MECHANICAL HVAC ZONE PLAN
M201	SECTIONS AND ENLARGED PLANS
M301 TO M304	MECHANICAL DETAILS
E001	ELECTRICAL COVER SHEET
E002 TO E003	ELECTRICAL SCHEDULES
E101	ELECTRICAL POWER AND SPECIAL SYSTEMS PLAN
E102	ELECTRICAL LIGHTING PLAN
E301 TO E302	ELECTRICAL DETAILS
ES101	ELECTRICAL SITE PLAN
P001	PLUMBING COVER SHEET
P101	PLUMBING DWV PLAN
P102	PLUMBING H20 AND GAS PLAN
P103	ROOF PLUMBING PLAN
P301 TO P302	PLUMBING DETAILS

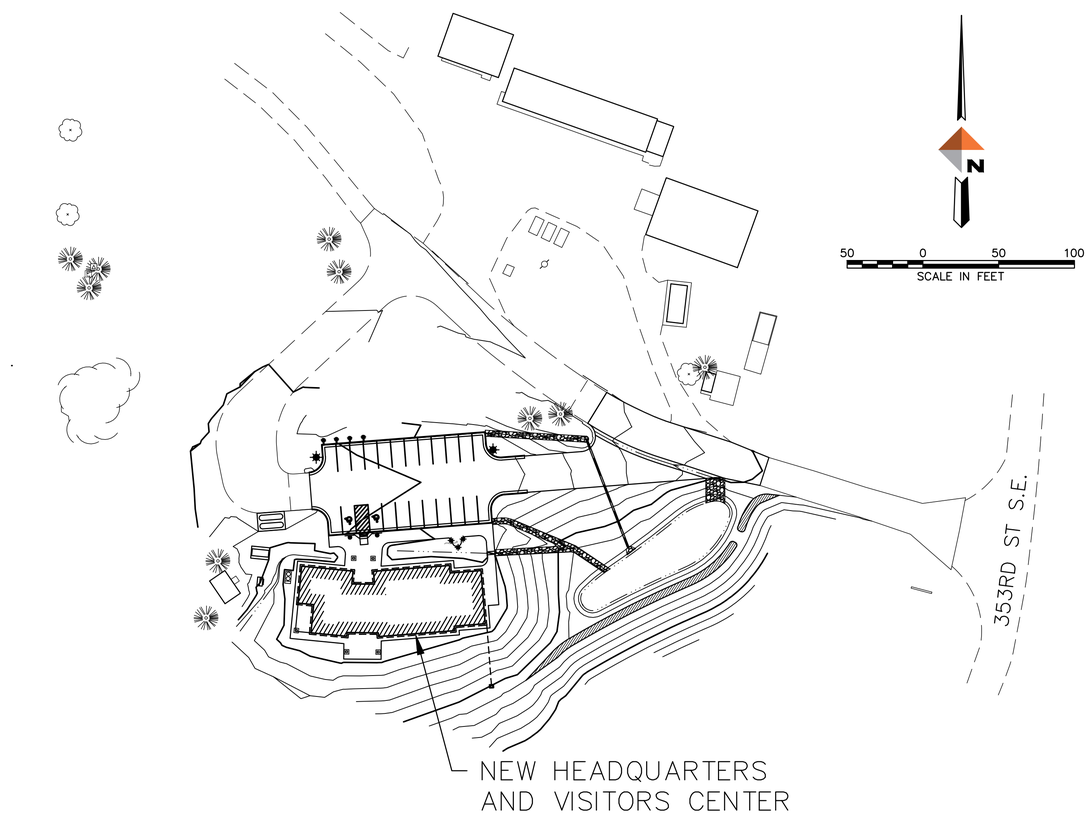

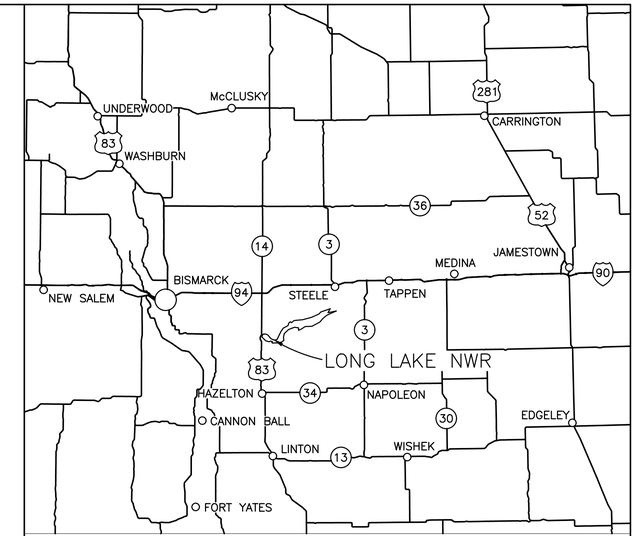

VICINITY MAP

NO SCALE

APPROVAL SIGNATURES

REGIONAL ENGINEER	DATE
EDWARD DUNN — Digitally signed by EDWARD DUNN Date: 2022.05.24 13:58:38 -06'00'	
PROGRAM SUPERVISOR	DATE
ASS'T. REGIONAL DIR.	DATE
FACILITIES	DATE
SAFETY	DATE
CULTURAL RESOURCES	DATE

NOTE TO BIDDERS:

ANY PRINT ACCOMPANYING THIS INVITATION TO BID MAY BE A REDUCED REPRODUCTION OF THE WORKING DRAWINGS. IF LINE BELOW DOES NOT MEASURE SIX INCHES IN LENGTH, THE INDICATED SCALES ARE TO BE ADJUSTED ACCORDINGLY.

UNITED STATES DEPARTMENT OF THE INTERIOR

FISH AND WILDLIFE SERVICE

REGION 6 ENGINEERING - DENVER, COLORADO

LONG LAKE

NATIONAL WILDLIFE REFUGE

BURLEIGH COUNTY, NORTH DAKOTA

NEW HEADQUARTERS AND VISITOR CENTER

COVER SHEET

REV	DATE	DESCRIPTION	BY

REGISTERED PROFESSIONAL ENGINEER — MARK Y. HINES — PE-29231 — DATE 5/6/2022 — NORTH DAKOTA

DESIGNED: MH	DRAWN: JB	CHECKED: BD
DATE: 2022.05.09		SHEET 1 OF 66

C:\dowl_pw\d0394468\SA-CS-CV-27085.dwg

GENERAL NOTES

1. THE UTILITIES SHOWN IN PLAN AND PROFILE ARE INDICATED IN ACCORDANCE WITH AVAILABLE RECORDS. (ALL UTILITIES MAY NOT BE SHOWN.) THE CONTRACTOR SHALL BE RESPONSIBLE FOR OBTAINING EXACT LOCATIONS AND ELEVATIONS OF ALL UTILITIES FROM THE OWNERS OF RESPECTIVE UTILITIES. ALL UTILITIES SHALL BE NOTIFIED AT LEAST 72 HOURS PRIOR TO EXCAVATION.
2. ALL MINOR OBSTRUCTIONS MAY NOT BE SHOWN ON PLANS. THE CONTRACTOR SHALL VISIT THE SITE AND DETERMINE THE ACTUAL CONDITIONS WITH REGARD TO THE EXISTENCE OF FENCES, DRIVEWAYS, TREES, SIDEWALKS, CULVERTS, UTILITIES AND OTHER MISCELLANEOUS OBSTACLES THAT MAY INTERFERE WITH CONSTRUCTION PRIOR TO SUBMITTING BIDS.
3. PROTECT OR RESTORE ALL LOT CORNERS AND SURVEY MONUMENTS.
4. SYMBOLS ON THE DRAWINGS (BECAUSE OF THEIR SIZE) MAY NOT REPRESENT THE EXACT LOCATION OF EITHER PROPOSED OR EXISTING UTILITIES. (EX. GATE VALVES & HYDRANTS)
5. ALL UNITS ARE IN FEET, UNLESS OTHERWISE NOTED.
6. IF INSTALLATION DETAILS AND MANUFACTURER'S INSTALLATION REQUIREMENTS DO NOT MATCH, THE PROJECT OWNER SHALL BE CONSULTED ON DISCREPANCIES.

CIVIL SITE LEGEND

PROPOSED	EXISTING	PROPOSED	EXISTING
W WATER LINE	w w w WATER LINE	CS CURB STOP	W WATER METER
S SEWER LINE	s s s SEWER LINE	SANITARY SEWER CLEAN OUT	WATER VALVE
STORM	SD SD SD STORM	TRANSFORMER	UTILITY POLE
E UNDERGROUND ELECTRIC CONDUIT	E E E UNDERGROUND ELECTRIC CONDUIT	GRADING LIMIT	TREE
G GAS LINE	G G G GAS LINE	TRAFFIC SIGN	B-1 BORE HOLE LOCATION
FO FIBER OPTIC	FO FO FO FIBER OPTIC	CONCRETE	W WELL
1400 MAJOR CONTOUR	1400 MAJOR CONTOUR	RIPRAP	
1401 MINOR CONTOUR	1401 MINOR CONTOUR	CP-102 REBAR CONTROL POINT	
CURB AND GUTTER		x x x FENCE	
DITCH/SWALE			
EDGE OF GRAVEL	EDGE OF GRAVEL		

UTILITIES

ELECTRIC:
CAPITAL ELECTRIC COOPERATIVE, INC.
4111 STATE STREET
PO BOX 730
BISMARCK, ND 58502
CONTACT: BEAU TOWNSEND
PHONE: 701-712-7903

COMMUNICATIONS/DATA:
BEK HEADQUARTERS
200 EAST BROADWAY
PO BOX 230
STEELE, ND 58482
CONTACT: ENGINEERING
PHONE: 701-475-2361

LONG LAKE TOWNSHIP

MATT SEIBEL
2290 295TH ST SE
MOFFIT ND 58560
PHONE:701-214-9628

EMAIL: seibelmatt1@gmail.com

CONTACTS

FWS ENGINEERING:
REGIONAL OFFICE 6
134 UNION BLVD
LAKEWOOD, CO 80228
CONTACT: MICHAEL LEMIEUX
TELE: 303-236-4474

STATION MANAGER
LONG LAKE NWR COMPLEX
12000 353 RD STREET SE
MOFFIT, ND 58560
CONTACT: JARED NEWTON
TELE: 701-387-4397 EXT. 14

CIVIL ENGINEER:
DOWL
1833 S. SHERIDAN AVE.
SHERIDAN, WY 82801
CONTACT: MARK HINES, P.E.
TELE: 307-257-8667

ARCHITECT:
STANLEY CONSULTANTS INC.
225 IOWA AVENUE
MUSCATINE, IA 52761
CONTACT: CHAD CHAMBERLIN, A.I.A.
TELE: 563-264-6671

ELECTRICAL ENGINEER:
ASSOCIATED CONSTRUCTION ENGINEERING (ACE)
2040 HARNIS BLVD.
BILLINGS, MT 59101
CONTACT: CHRIS GREEN, P.E.
TELE: 406-245-0136

MECHANICAL/PLUMBING ENGINEER
ASSOCIATED CONSTRUCTION ENGINEERING (ACE)
2040 HARNISH BOULEVARD
BILLINGS, MT 59101
CONTACT: AARON SADOWSKI, P.E.
TELE: 406-245-0136

STRUCTURAL ENGINEER:
DOWL
222 NORTH 32ND STREET, SUITE 700
BILLINGS, MT 59101
CONTACT: MATTHEW METTLER, P.E.
TELE: 406-869-6384

REGISTERED PROFESSIONAL ENGINEER
MARK V. HINES
PE-29231
DATE 5/12/2022
NORTH DAKOTA

C:\dowl_pw\d0394468\SA-CS-CV-27085.dwg

LONG LAKE NWR

CIVIL NOTES AND LEGEND

NEW HEADQUARTERS AND VISITORS CENTER

SUB-SHEET C002

DESIGNED	DRAWN	CHECKED	DATE		SHEET
MH	JB	BD	2022.05.09		2 OF 66

GENERAL NOTES

1. CONTRACTOR SHALL COORDINATE DEMOLITION, TEMPORARY RELOCATIONS, ETC. WITH NEW CONSTRUCTION AS REQUIRED.
2. DEMOLITION OF STRUCTURES INCLUDES FULLY REMOVING ALL FOUNDATIONS, SUMPS, DRAINS, SEWERS AND PIPING.
3. CONTRACTOR TO BACKFILL DEMOLISHED AREAS WITH COMPACTED SOIL FILL OR TOPSOIL FROM APPROVED SOURCE TO MATCH ADJACENT GRADES.
4. CONTRACTOR TO VERIFY ALL UTILITIES ARE DISCONNECTED PRIOR TO DEMOLITION. CONTRACTOR SHALL VERIFY EXTENT OF DEMOLITION IN THE FIELD, MARK AND PROTECT EXISTING UTILITIES FOR FUTURE CONNECTION. CONTRACTOR TO COORDINATE WITH UTILITY COMPANIES AND FWS AS NEEDED.
5. CONTRACTOR SHALL PLACE ORANGE CONSTRUCTION FENCING AROUND ANY EXISTING ITEMS OR TREES TO REMAIN WITHIN THE VICINITY OF THE DEMOLITION WORK AREA TO PROTECT THEM IN-PLACE.
6. REMOVE EXISTING SURFACING AND TOPSOIL AS REQUIRED.
7. ALL DEMOLISHED STRUCTURES AND DEMOLITION DEBRIS SHALL BECOME THE PROPERTY OF THE CONTRACTOR UNLESS OTHERWISE NOTED. ALL MATERIALS AND DEBRIS SHALL BE REMOVED FROM THE SITE AND DISPOSED OF AT A PERMITTED LANDFILL FACILITY.

DEMOLITION KEYNOTES

1. DEMOLISH HEADQUARTERS BUILDING INCLUDING DRAIN PIT, SAND/OIL PIT, HOIST PIT.
2. DEMOLISH GENERATOR SHED AND CONCRETE PAD.
3. DEMOLISH RETAINING WALL.
4. DISCONNECT GENERATOR AND REMOVE TO SHOP AREA 500' TO THE NORTH.
5. DEMOLISH KIOSK.
6. DEMOLISH AND REMOVE EXISTING SEPTIC TANK AND SEWER PIPING
7. DEMOLISH CONCRETE DRIVEWAY AND FLATWORK.
8. SAWCUT EXISTING CONCRETE TO CLEAN VERTICAL EDGE OR REMOVE TO EXISTING JOINT WITHIN 4'.
9. DEMOLISH FLAG POLE INCLUDING BASE. FLAG SHALL BE DELIVERED TO FWS.
10. REMOVE BIRDHOUSE AND PLACE IN LOCATION DESIGNATED BY FWS.
11. REMOVE EXISTING ELECTRICAL EQUIPMENT, SERVICE AND METER AND TEMPORARILY RELOCATE AS NEEDED.
12. CAREFULLY REMOVE SEWER LIFT STATION CONTROLS AND WIRING AND RELOCATE AS SHOWN. SEWER LIFT STATION TO REMAIN IN SERVICE THROUGHOUT CONSTRUCTION. COORDINATE AND RE-INSTALL LIFT STATION CONTROLS AS DESIGNATED.
13. REMOVE FIBER OPTIC CABLE FROM BOX, LOCATE AND EXPOSE BURIED FIBER OPTIC CABLE FROM THE BUILDING TO A POINT APPROXIMATELY 40' WEST OF EXISTING BUILDING, MARK AND PROTECT CABLE FOR FUTURE SPLICE AND EXTENSION TO NEW BUILDING.
14. DISCONNECT WATER SERVICE FROM EXISTING BUILDING, CAP AND MARK SERVICE LINE.
15. DISCONNECT GEOTHERMAL HEAT BED FROM EXISTING BUILDING. CAREFULLY REMOVE REMAINING GLYCOL AND DISPOSE OF AT FACILITY APPROVED FOR DISPOSAL OF THIS LIQUID. CAP AND MARK LOCATION OF REMAINING PIPING.
16. TIME CAPSULE TO REMAIN IN PLACE. PROTECT AS REQUIRED.
17. REMOVE EXISTING TREES.
18. REMOVE EXISTING CURBING.
19. REMOVE EXISTING CULVERT.
20. WEATHER STATION TO REMAIN. FENCE AND PROTECT AS NECESSARY.

REGISTERED PROFESSIONAL ENGINEER
MARK W. HINES
PE-29231
DATE 5/12/2022
NORTH DAKOTA

LONG LAKE NWR

DEMOLITION PLAN

NEW HEADQUARTERS BUILDING

DESIGNED	DRAWN	CHECKED	DATE	
MH	JB	BD	2022.05.09	

SUB-SHEET C101

SHEET 3 OF 66

C:\dowl_pw\d0394468\SA-CS-DM-27085.dwg

HORIZONTAL CONTROL

Point ID	Northing	Easting	Elevation	Latitude (Local)	Longitude (Local)	Ellipsoid Height (Local)	Feature Code
100	366075.848	2036612.138	1736.545	N46°40'12.56457"	W100°13'43.25993"	1664.306	SET-REBAR
101	365687.495	2036282.602	1723.390	N46°40'08.74221"	W100°13'48.00464"	1651.152	SET-REBAR
102	366265.695	2036357.134	1737.012	N46°40'14.44729"	W100°13'46.90733"	1664.776	SET-REBAR

HORIZONTAL CONTROL NOTES

1. ALL DIMENSIONS ARE TO THE FACE OF BUILDING, FACE OF CURB, EDGE OF SIDEWALK, OR CENTER OF STRUCTURE.
2. DIMENSIONS ALONG ACCESS ROAD, WHERE CURB IS NOT PRESENT, ARE TO EDGE OF GRAVEL.

COORDINATE SYSTEM DETAILS

This project uses the North Dakota State Plane Coordinate System, South Zone (3302): Datum: NAD 1983 (Conus); Geoid Model:GEOID18 (Conus); Units: US survey feet. The vertical datum is NAVD88.

All values and distances are grid values, which do not equal true ground values. To determine ground values at this site, multiply grid value by a combined scale factor of 1.0001395458. Complete cartesian and geodetic control values are shown below.
DOWL established project control with an OPUS position at point number 100 (CP 100).

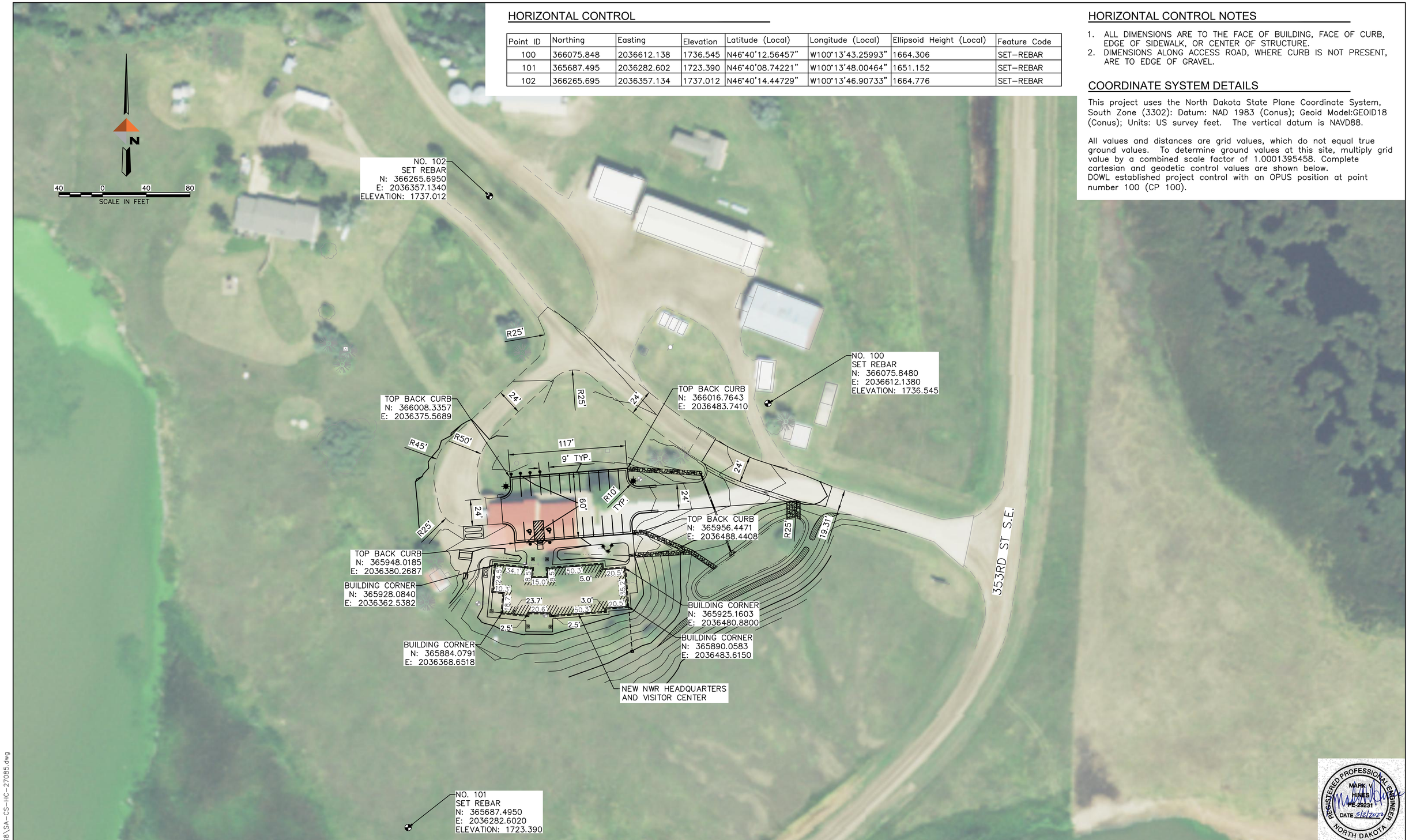

C:\dowl_pw\d0394468\SA-CS-HC-27085.dwg

LONG LAKE NWR

HORIZONTAL CONTROL PLAN

NEW HEADQUARTERS AND VISITORS CENTER

DESIGNED	DRAWN	CHECKED	DATE	
MH	JB	BD	2022.05.09	

SUB-SHEET C201

SHEET 4 OF 66

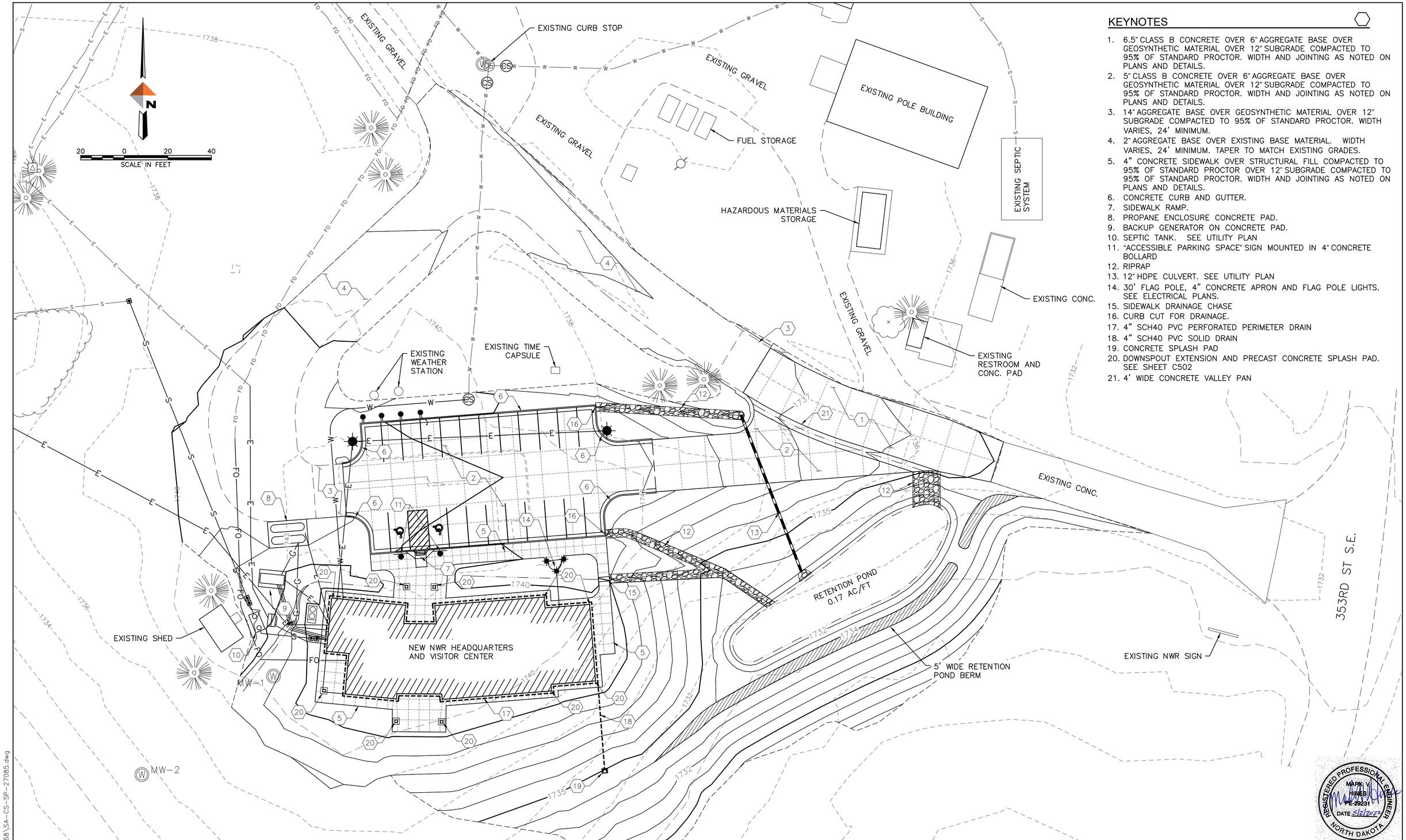

KEYNOTES

1. 6.5" CLASS B CONCRETE OVER 6" AGGREGATE BASE OVER GEOSYNTHETIC MATERIAL OVER 12" SUBGRADE COMPACTED TO 95% OF STANDARD PROCTOR. WIDTH AND JOINTING AS NOTED ON PLANS AND DETAILS.
2. 5" CLASS B CONCRETE OVER 6" AGGREGATE BASE OVER GEOSYNTHETIC MATERIAL OVER 12" SUBGRADE COMPACTED TO 95% OF STANDARD PROCTOR. WIDTH AND JOINTING AS NOTED ON PLANS AND DETAILS.
3. 14" AGGREGATE BASE OVER GEOSYNTHETIC MATERIAL OVER 12" SUBGRADE COMPACTED TO 95% OF STANDARD PROCTOR. WIDTH VARIES, 24' MINIMUM.
4. 2" AGGREGATE BASE OVER EXISTING BASE MATERIAL. WIDTH VARIES, 24' MINIMUM. TAPER TO MATCH EXISTING GRADES.
5. 4" CONCRETE SIDEWALK OVER STRUCTURAL FILL COMPACTED TO 95% OF STANDARD PROCTOR OVER 12" SUBGRADE COMPACTED TO 95% OF STANDARD PROCTOR. WIDTH AND JOINTING AS NOTED ON PLANS AND DETAILS.
6. CONCRETE CURB AND GUTTER.
7. SIDEWALK RAMP.
8. PROPANE ENCLOSURE CONCRETE PAD.
9. BACKUP GENERATOR ON CONCRETE PAD.
10. SEPTIC TANK. SEE UTILITY PLAN
11. "ACCESSIBLE PARKING SPACE" SIGN MOUNTED IN 4" CONCRETE BOLLARD
12. RIPRAP
13. 12" HDPE CULVERT. SEE UTILITY PLAN
14. 30' FLAG POLE, 4" CONCRETE APRON AND FLAG POLE LIGHTS. SEE ELECTRICAL PLANS.
15. SIDEWALK DRAINAGE CHASE
16. CURB CUT FOR DRAINAGE.
17. 4" SCH40 PVC PERFORATED PERIMETER DRAIN
18. 4" SCH40 PVC SOLID DRAIN
19. CONCRETE SPLASH PAD
20. DOWNSPOUT EXTENSION AND PRECAST CONCRETE SPLASH PAD. SEE SHEET C502
21. 4' WIDE CONCRETE VALLEY PAN

C:\dowl_pw\d0394468\SA-CS-SP-27085.dwg

LONG LAKE NWR					SUB-SHEET
CIVIL SITE PLAN					C301
NEW HEADQUARTERS AND VISITORS CENTER					
DESIGNED MH	DRAWN JB	CHECKED BD	DATE 2022.05.09		SHEET 5 OF 66

GRADING PLAN NOTES

1. SURFACE CONTOURS BASED ON TOPOGRAPHICAL SURVEY PERFORMED BY DOWL OCTOBER 2021
2. FINISH CONTOURS ARE TO TOP OF FINISHED GRADE.
3. CURB ELEVATIONS ARE FLOW LINE (FL) OR TOP BACK OF CURB (TBC) AS LABELED.
4. TOP OF CURB IS 6" ABOVE CURB FLOW LINE UNLESS OTHERWISE NOTED.
5. USFWS LONG LAKE STAFF TO FURNISH AND INSTALL SEEDING ON ALL DISTURBED AREAS INCLUDING CUT AND FILL SLOPES. CONTRACTOR SHALL COORDINATE HIS ACTIVITIES WITH STAFF FOR THIS WORK.

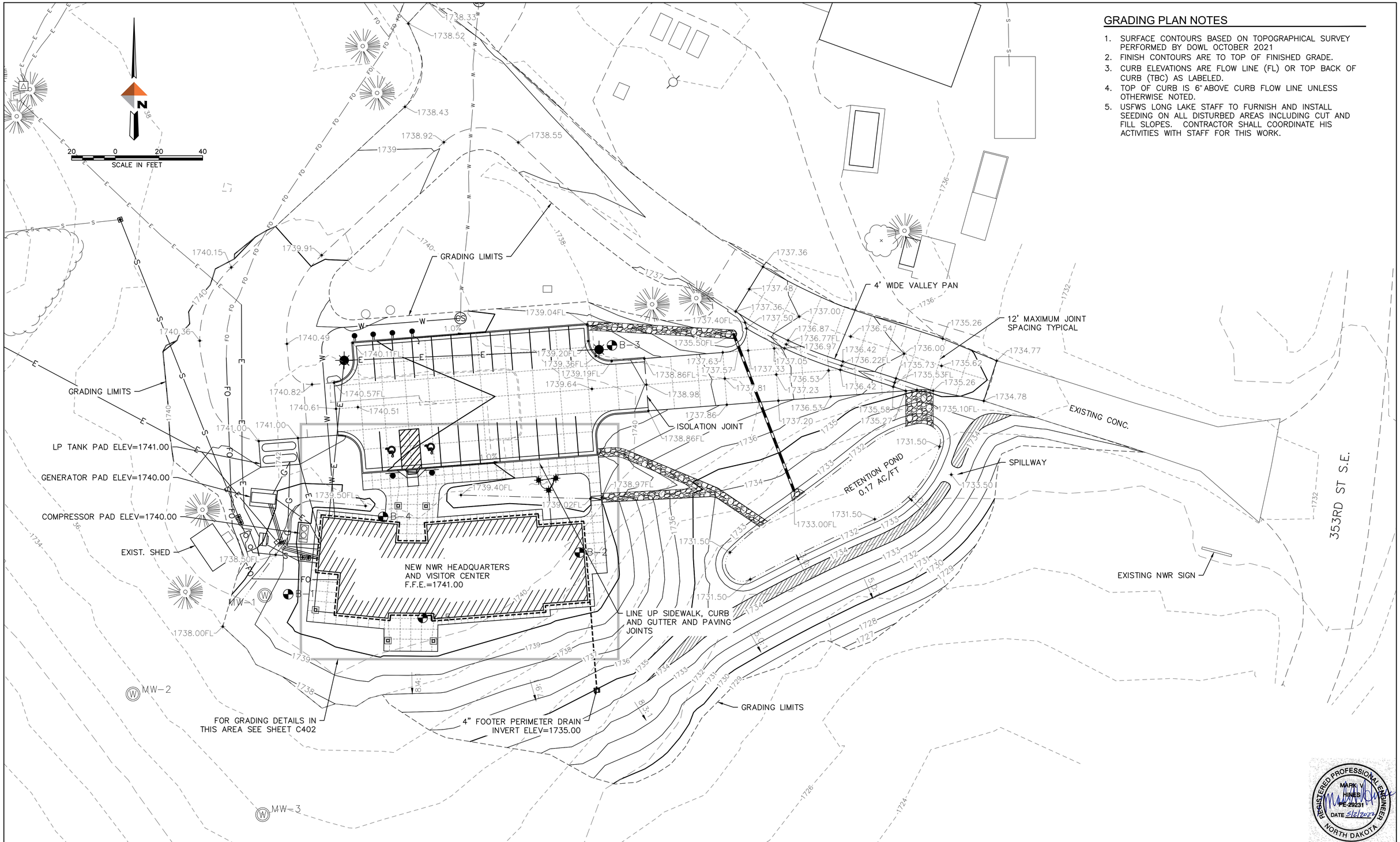

REGISTERED PROFESSIONAL ENGINEER
MARK V. HINES
PE-29231
DATE 5/2/2022
NORTH DAKOTA

LONG LAKE NWR **GRADING PLAN** NEW HEADQUARTERS AND VISITORS CENTER					SUB-SHEET C401
DESIGNED MH	DRAWN JB	CHECKED BD	DATE 2022.05.09		SHEET 6 OF 66

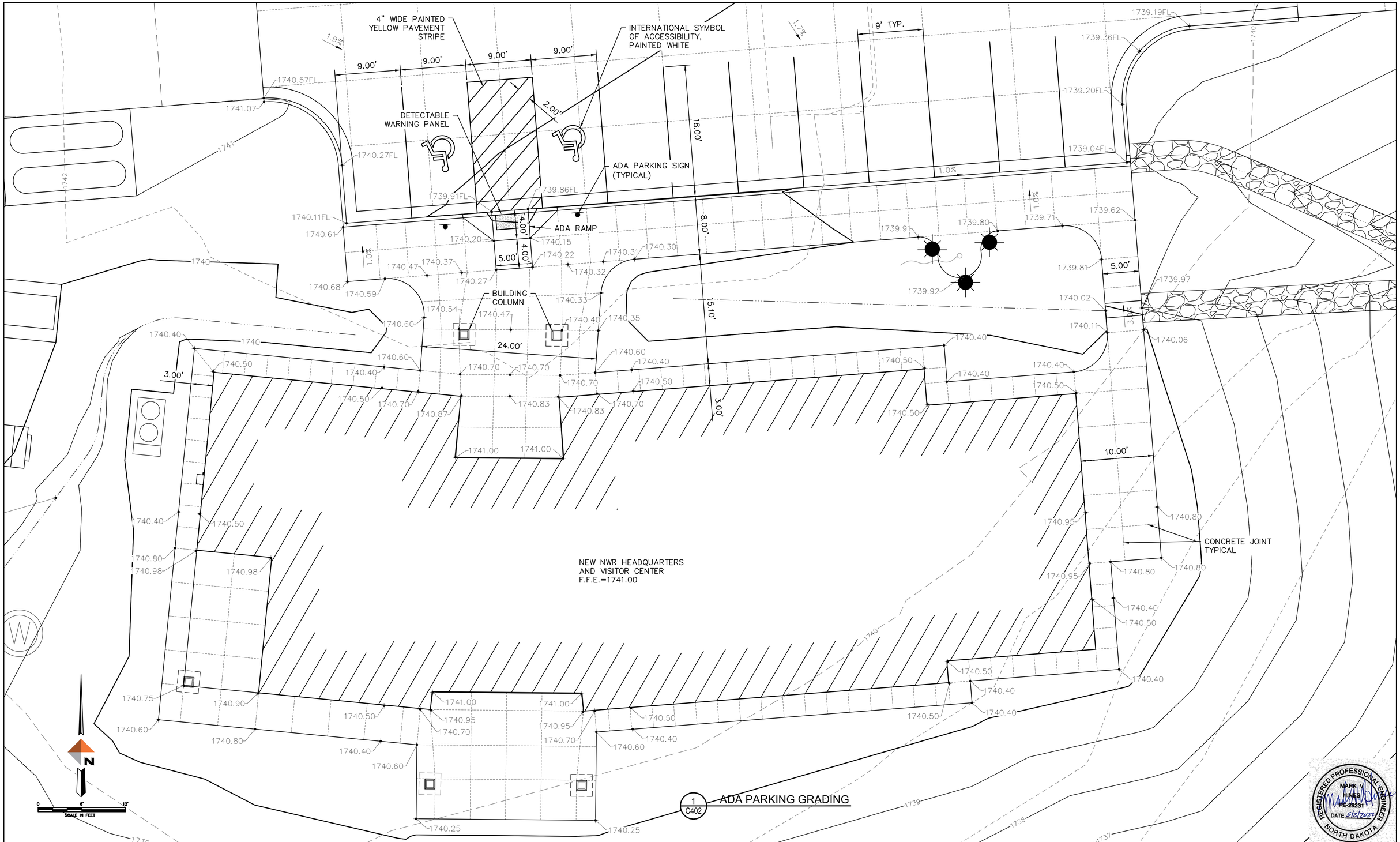

LONG LAKE NWR					SUB-SHEET
GRADING DETAIL					C402
NEW HEADQUARTERS AND VISITORS CENTER					
DESIGNED MH	DRAWN JB	CHECKED BD	DATE 2022.05.09		SHEET 7 OF 66

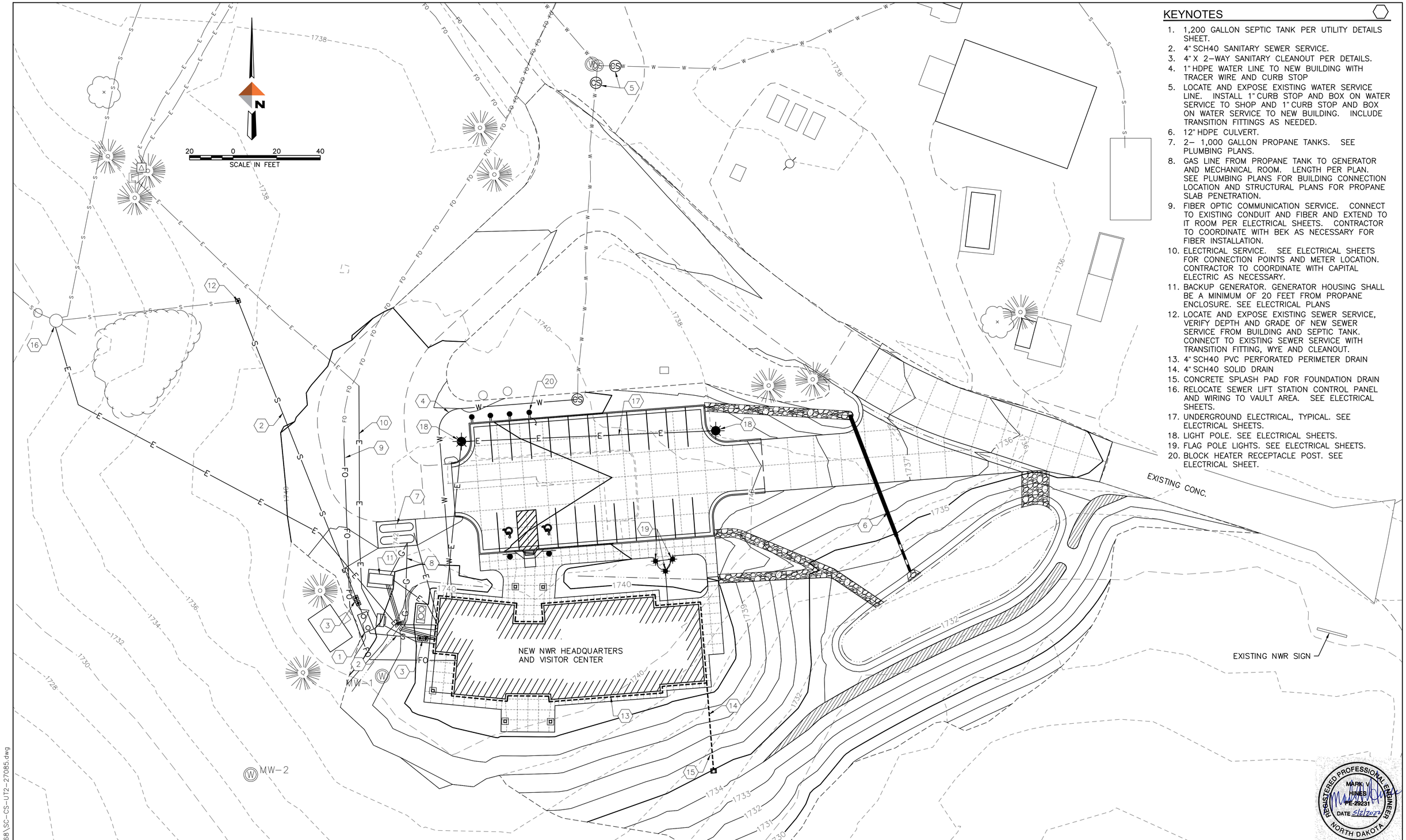

KEYNOTES

1. 1,200 GALLON SEPTIC TANK PER UTILITY DETAILS SHEET.
2. 4" SCH40 SANITARY SEWER SERVICE.
3. 4" X 2–WAY SANITARY CLEANOUT PER DETAILS.
4. 1" HDPE WATER LINE TO NEW BUILDING WITH TRACER WIRE AND CURB STOP
5. LOCATE AND EXPOSE EXISTING WATER SERVICE LINE. INSTALL 1" CURB STOP AND BOX ON WATER SERVICE TO SHOP AND 1" CURB STOP AND BOX ON WATER SERVICE TO NEW BUILDING. INCLUDE TRANSITION FITTINGS AS NEEDED.
6. 12" HDPE CULVERT.
7. 2– 1,000 GALLON PROPANE TANKS. SEE PLUMBING PLANS.
8. GAS LINE FROM PROPANE TANK TO GENERATOR AND MECHANICAL ROOM. LENGTH PER PLAN. SEE PLUMBING PLANS FOR BUILDING CONNECTION LOCATION AND STRUCTURAL PLANS FOR PROPANE SLAB PENETRATION.
9. FIBER OPTIC COMMUNICATION SERVICE. CONNECT TO EXISTING CONDUIT AND FIBER AND EXTEND TO IT ROOM PER ELECTRICAL SHEETS. CONTRACTOR TO COORDINATE WITH BEK AS NECESSARY FOR FIBER INSTALLATION.
10. ELECTRICAL SERVICE. SEE ELECTRICAL SHEETS FOR CONNECTION POINTS AND METER LOCATION. CONTRACTOR TO COORDINATE WITH CAPITAL ELECTRIC AS NECESSARY.
11. BACKUP GENERATOR. GENERATOR HOUSING SHALL BE A MINIMUM OF 20 FEET FROM PROPANE ENCLOSURE. SEE ELECTRICAL PLANS
12. LOCATE AND EXPOSE EXISTING SEWER SERVICE, VERIFY DEPTH AND GRADE OF NEW SEWER SERVICE FROM BUILDING AND SEPTIC TANK. CONNECT TO EXISTING SEWER SERVICE WITH TRANSITION FITTING, WYE AND CLEANOUT.
13. 4" SCH40 PVC PERFORATED PERIMETER DRAIN
14. 4" SCH40 SOLID DRAIN
15. CONCRETE SPLASH PAD FOR FOUNDATION DRAIN
16. RELOCATE SEWER LIFT STATION CONTROL PANEL AND WIRING TO VAULT AREA. SEE ELECTRICAL SHEETS.
17. UNDERGROUND ELECTRICAL, TYPICAL. SEE ELECTRICAL SHEETS.
18. LIGHT POLE. SEE ELECTRICAL SHEETS.
19. FLAG POLE LIGHTS. SEE ELECTRICAL SHEETS.
20. BLOCK HEATER RECEPTACLE POST. SEE ELECTRICAL SHEET.

C:\dowl_pw\d0394468\SC-CS-U12-27085.dwg

LONG LAKE NWR					SUB-SHEET
UTILITY PLAN					C501
NEW HEADQUARTERS AND VISITORS CENTER					
DESIGNED MH	DRAWN JB	CHECKED BD	DATE 2022.05.09		SHEET 8 OF 66

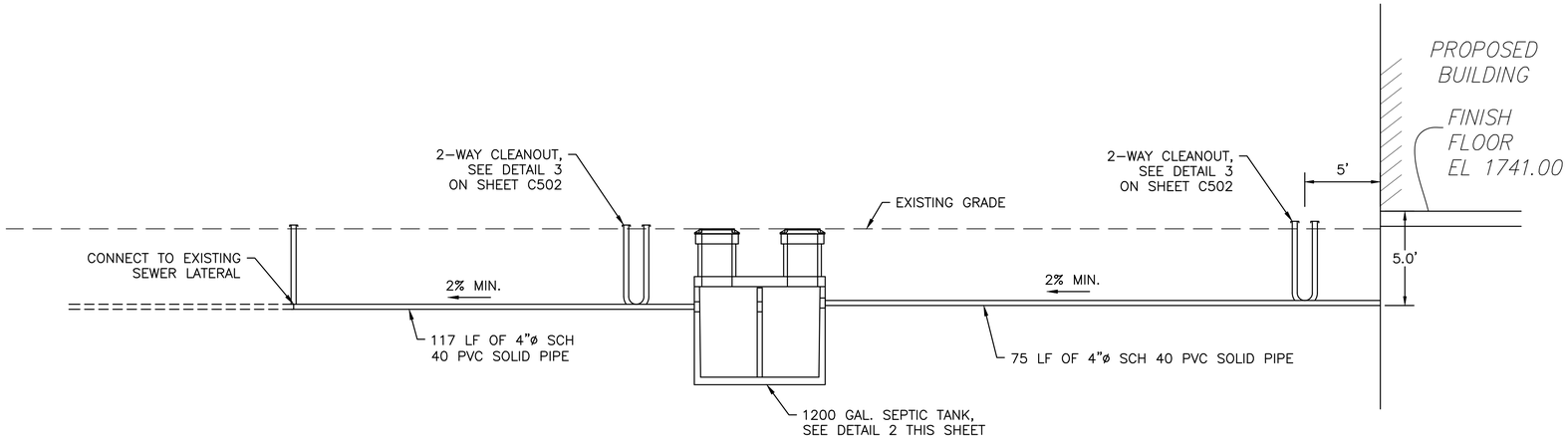

1 C502 SEWER LATERAL PROFILE
NOT TO SCALE

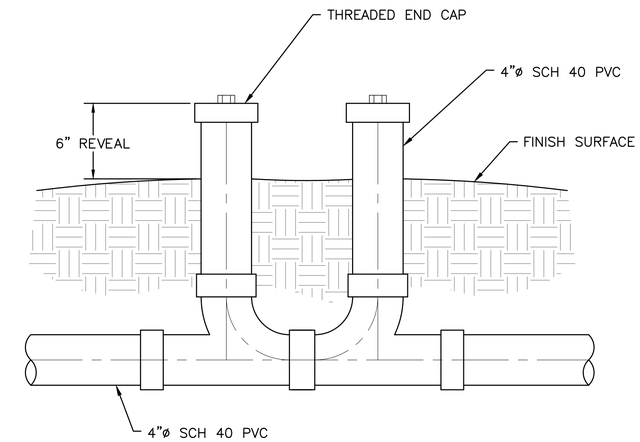

3 C502 2-WAY 2-PORT CLEANOUT DETAIL
NOT TO SCALE

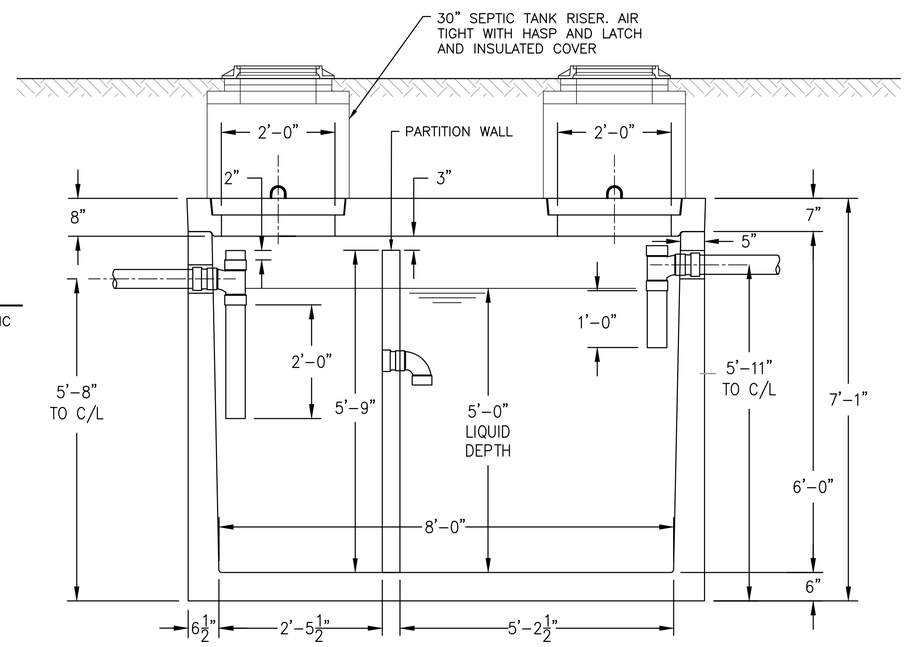

SEPTIC TANK AND LIFT STATION NOTES:

1. CONTRACTOR SHALL VERIFY FINAL LOCATION AND ELEVATION OF SEPTIC TANK AND LIFT STATION PRIOR TO ORDERING COMPONENTS AND INSTALLATING THEM AT THE SITE.

2 C502 1200 GALLON SEPTIC TANK DETAIL
NOT TO SCALE

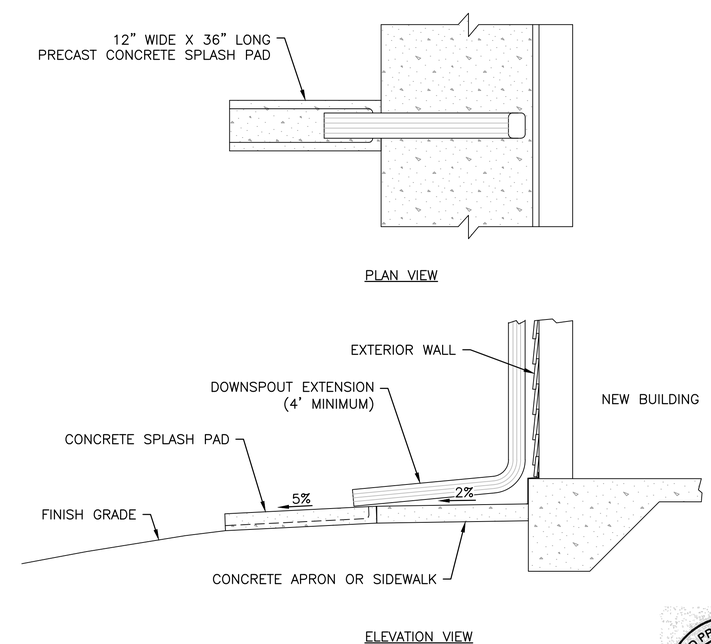

4 C502 SPLASH PAD DETAILS
NTS

REGISTERED PROFESSIONAL ENGINEER
MARK HINES
PE-29231
DATE 5/2/2022
NORTH DAKOTA

LONG LAKE NWR **UTILITY DETAILS** NEW HEADQUARTERS AND VISITORS CENTER					SUB-SHEET C502
DESIGNED MH	DRAWN JB	CHECKED BD	DATE 2022.05.09		SHEET 9 OF 66

C:\dowl_pw\d0394468\SA-CS-UT-DT-27085.dwg

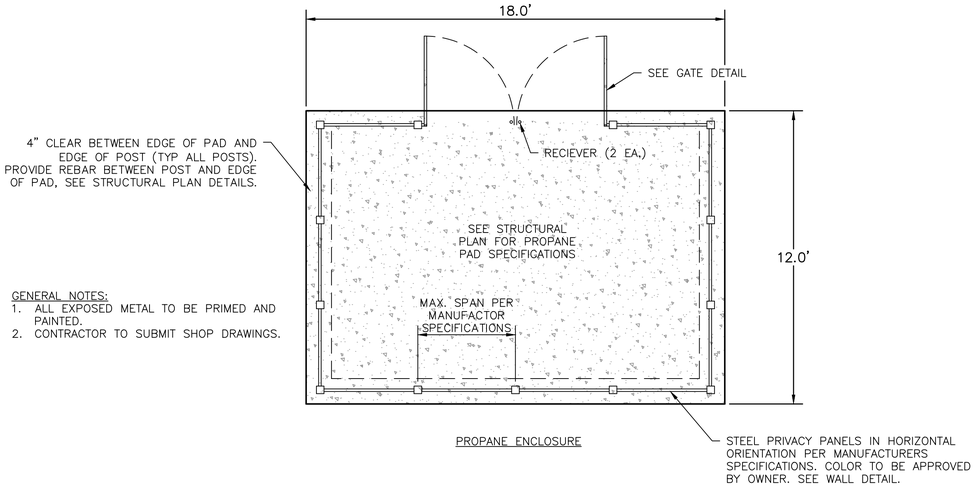

GENERAL NOTES:
1. ALL EXPOSED METAL TO BE PRIMED AND PAINTED.
2. CONTRACTOR TO SUBMIT SHOP DRAWINGS.

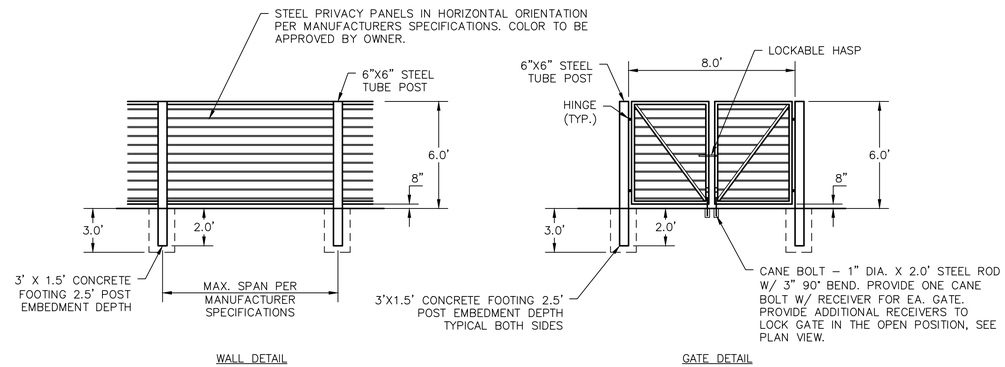

1 C503 PROPANE ENCLOSURE DETAIL
NOT TO SCALE

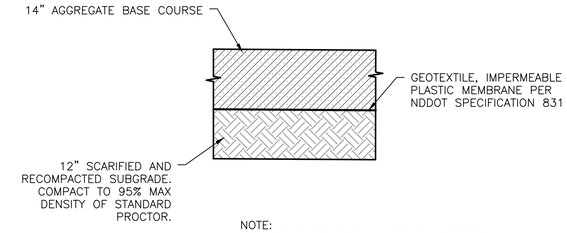

NOTE:
1. CONTRACTOR SHALL REVIEW GEOTECHNICAL REPORT FOR PAVEMENT CONSTRUCTION AND TESTING REQUIREMENTS.

4 C503 GRAVEL AGGREGATE SECTION
NOT TO SCALE

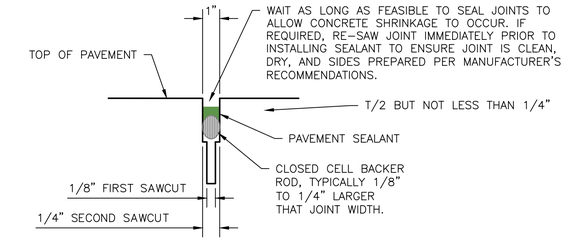

NOTES:
1. ENSURE JOINTS ARE CLEAN AND DRY PRIOR TO THE APPLICATION OF THE JOINT SEALANT.
2. INSTALL CLOSED CELL BACKER ROD AFTER JOINTS HAVE BEEN CLEANED AND DRIED IN ACCORDANCE WITH SEALANT MANUFACTURER'S REQUIREMENTS.
3. INSTALL BACKER ROD AT CONSISTENT AND UNIFORM DEPTH.
4. JOINT SEALANT APPLICATION SHALL BE IN STRICT COMPLIANCE WITH SEALANT MANUFACTURER'S REQUIREMENTS.

5 C503 CONCRETE JOINT DETAIL
NOT TO SCALE

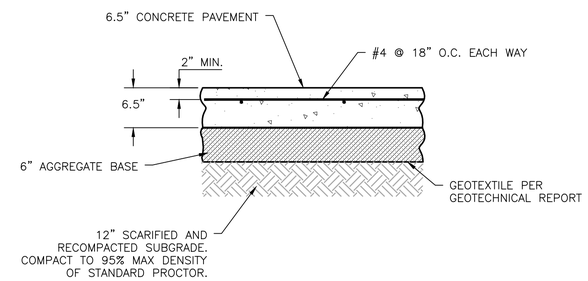

NOTE:
1. CONTRACTOR SHALL REVIEW GEOTECHNICAL REPORT FOR PAVEMENT CONSTRUCTION AND TESTING REQUIREMENTS.

6 C503 CONCRETE DRIVEWAY
NOT TO SCALE

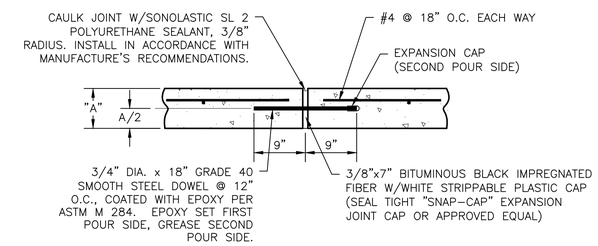

NOTES:
1. "A" PER CONCRETE SECTION AND GEOTECHNICAL REPORT.
2. REBAR SHALL NOT PASS THROUGH ANY JOINT.
3. 3/4" SQUARE DOWELS W/DOWEL CLIPS BY PNA, MAY BE SUBSTITUTED. CONTRACTOR TO SUBMIT REQUEST TO ENGINEER FOR APPROVAL.

7 C503 ISOLATION JOINT
NOT TO SCALE

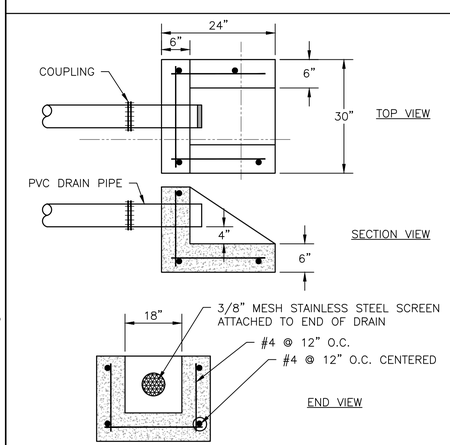

2 C503 CONCRETE SPLASH PAD DETAIL
NOT TO SCALE

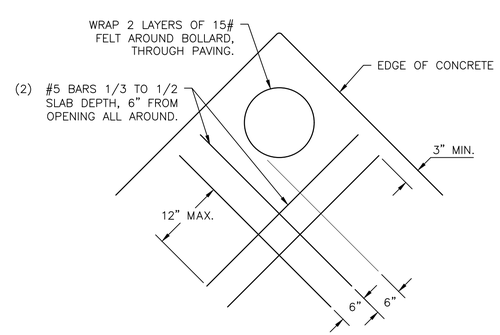

3 C503 REINFORCEMENT AT BOLLARD
NOT TO SCALE

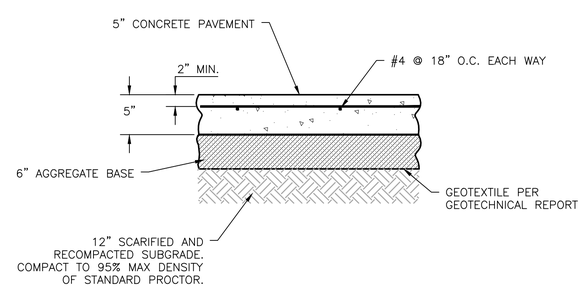

NOTE:
1. CONTRACTOR SHALL REVIEW GEOTECHNICAL REPORT FOR PAVEMENT CONSTRUCTION AND TESTING REQUIREMENTS.

8 C503 CONCRETE PARKING LOT
NOT TO SCALE

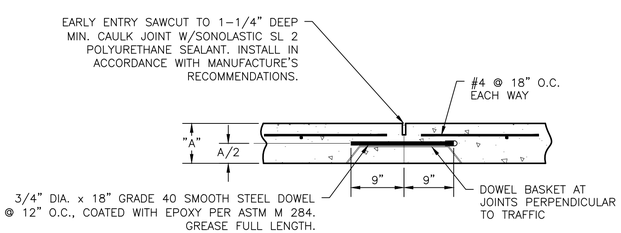

NOTES:
1. "A" PER CONCRETE SECTION AND GEOTECHNICAL REPORT.
2. REBAR SHALL NOT PASS THROUGH ANY JOINT.
4. 3/4" SQUARE DOWELS W/DOWEL CLIPS BY PNA, MAY BE SUBSTITUTED. CONTRACTOR TO SUBMIT REQUEST TO ENGINEER FOR APPROVAL.

REGISTERED PROFESSIONAL ENGINEER
MARK V. HINES
PE-29231
DATE 5/12/2022
NORTH DAKOTA

9 C503 CONTRACTION JOINT WITH DOWEL
NOT TO SCALE

C:\dowl_pw\d0394468\SA-CS-UT-DT-27085.dwg

LONG LAKE NWR **SITE DETAILS** NEW HEADQUARTERS AND VISITORS CENTER					SUB-SHEET C503
DESIGNED MH	DRAWN JB	CHECKED BD	DATE 2022.05.09		SHEET 10 OF 66

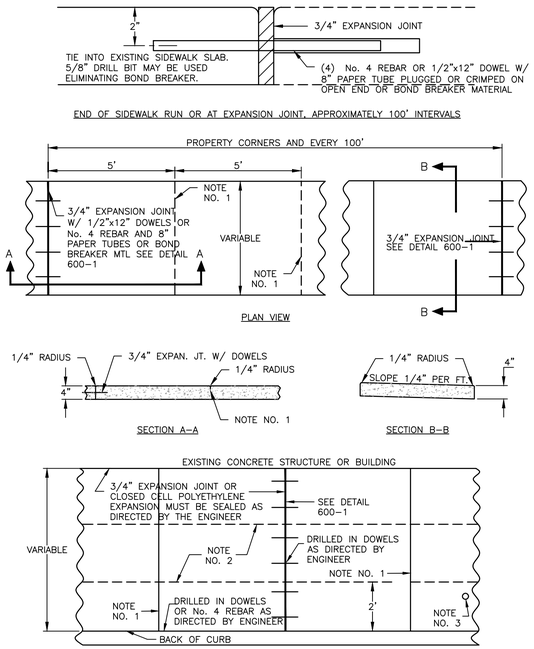

NOTES:
1. CONTRACTION JOINT SCORED 1" DEEP
2. LONGITUDINAL CONTRACTION JOINTS SHALL BE SPACED EQUIDISTANT, WITH 7' MAX. SPACING, SCORED 1/2 DEPTH OF CONCRETE.
3. SIGN & FLAG POLE HOLDERS, WHERE DESIGNATED BY THE ENGINEER, SHALL BE PLACED 2' BEHIND THE FACE OF THE CURB. ALL GATE VALVES, CURB STOP BOXES, HYDRANTS, TRAFFIC CONTROL FOUNDATIONS AND SIGN POSTS SHALL BE WRAPPED WITH APPROVED EXPANSION JOINT, OR APPROVED BOND BREAKER MATERIAL.

1 C504 SIDEWALK DETAILS
NOT TO SCALE

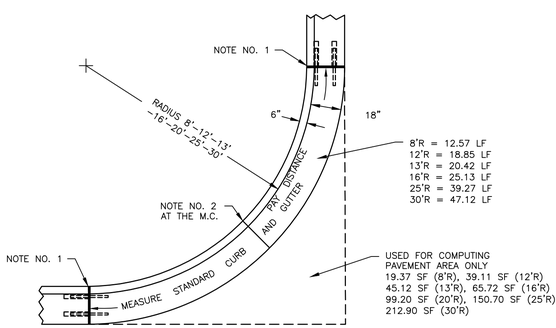

NOTES:
1. 3/4" EXPANSION JOINT WITH 3/4"X24" SMOOTH DOWELS & 16" PAPER TUBES. DOWELS SHALL BE GREASED THE FULL LENGTH. ALL PAPER TUBES SHALL BE PLUGGED OR CRIMPED ON OPEN END. ALL JOINTS SHALL BE SEALED. DOWELS SHALL BE SUPPORTED BY AN APPROVED SUPPORT MADE OF NO. 7 AWG WIRE.
2. CONTRACTION JOINT SCORED 1/3 THE DEPTH OF THE CONCRETE. JOINT SHALL BE SEALED.

2 C504 CURB AND GUTTER RADIUS DETAIL
NOT TO SCALE

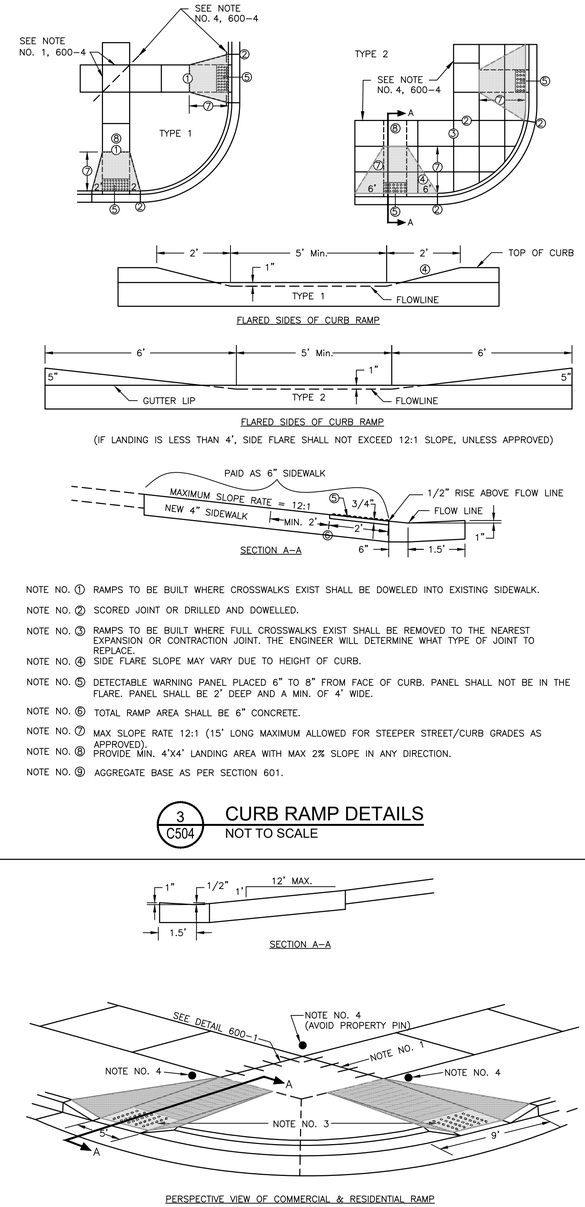

NOTE NO. ① RAMPS TO BE BUILT WHERE CROSSWALKS EXIST SHALL BE DOWELED INTO EXISTING SIDEWALK.

NOTE NO. ② SCORED JOINT OR DRILLED AND DOWELLED.

NOTE NO. ③ RAMPS TO BE BUILT WHERE FULL CROSSWALKS EXIST SHALL BE REMOVED TO THE NEAREST EXPANSION OR CONTRACTION JOINT. THE ENGINEER WILL DETERMINE WHAT TYPE OF JOINT TO REPLACE.

NOTE NO. ④ SIDE FLARE SLOPE MAY VARY DUE TO HEIGHT OF CURB.

NOTE NO. ⑤ DETECTABLE WARNING PANEL PLACED 6" TO 8" FROM FACE OF CURB. PANEL SHALL NOT BE IN THE FLARE. PANEL SHALL BE 2' DEEP AND A MIN. OF 4' WIDE.

NOTE NO. ⑥ TOTAL RAMP AREA SHALL BE 6" CONCRETE.

NOTE NO. ⑦ MAX SLOPE RATE 12:1 (15' LONG MAXIMUM ALLOWED FOR STEEPER STREET/CURB GRADES AS APPROVED).

NOTE NO. ⑧ PROVIDE MIN. 4'X4' LANDING AREA WITH MAX 2% SLOPE IN ANY DIRECTION.

NOTE NO. ⑨ AGGREGATE BASE AS PER SECTION 601.

3 C504 CURB RAMP DETAILS
NOT TO SCALE

NOTES:
1. 3/4" EXPANSION JOINT W/ 1/2" x12" SMOOTH REINFORCING STEEL OR #4 REINFORCING STEEL, WITH 8" PAPER TUBES OR BOND BREAKER MATERIAL WHEN USING 5 8" DRILL BIT, BREAKER MATERIAL MAY BE ELIMINATED.
2. RESIDENTIAL INTERSECTIONS SHALL USE 4.5' WALK AND RAMP SET 1.5' FROM PROPERTY LINE, UNLESS MOUNTABLE CURBS OR 6' SIDEWALK IS USED.
3. DETECTABLE WARNING PANEL. MIN. 2'x4'. PLACEMENT OF DETECTION PANELS SHALL BE DETERMINED BY ENGINEER ON ANY RADIUS 16' OR LARGER. PANELS MAY NOT BE PLACED IN THE FLARE OF RAMP.
4. INSTALL STEEL FENCE POSTS IN ACCORDANCE WITH SEC. 1205-3.9 WHEN DIRECTED.

4 C504 CURB RAMP DETAILS
NOT TO SCALE

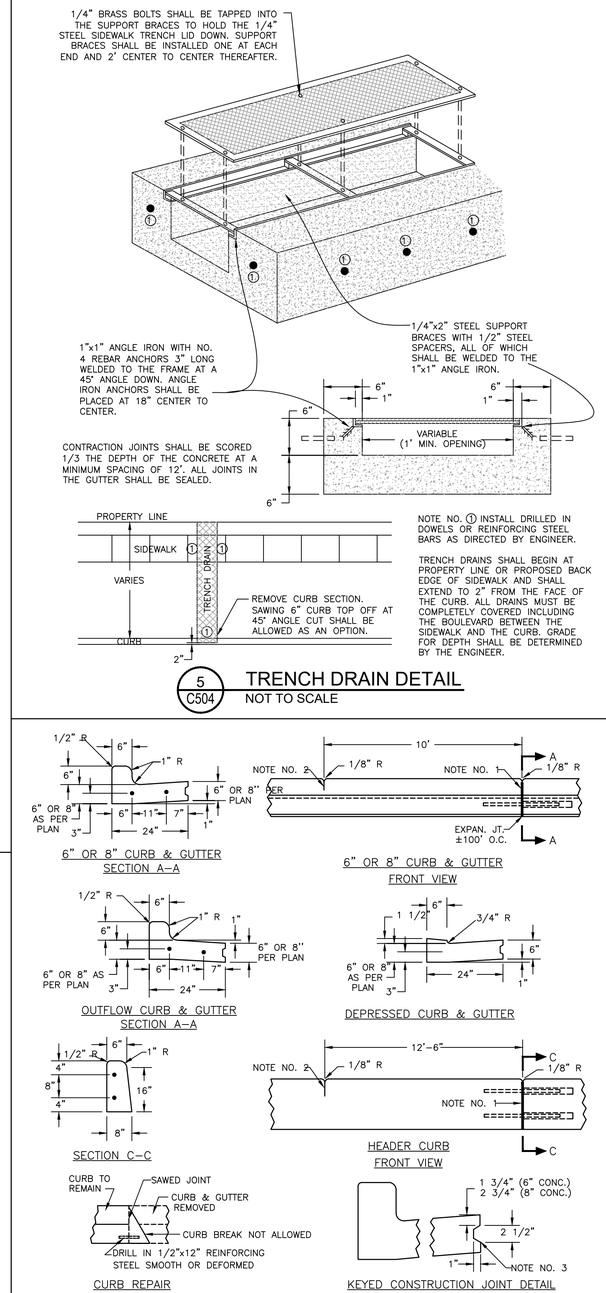

NOTES:
1. 3/4" EXPANSION WITH 3/4"x24" SMOOTH REINFORCING STEEL & 16" PAPER TUBES OR BOND BREAKER MATERIAL. DOWELS SHALL BE GREASED THE FULL LENGTH. ALL PAPER TUBES SHALL BE PLUGGED OR CRIMPED ON OPEN END. JOINTS SHALL BE PLACED EVERY 100' OR AS DETERMINED BY THE ENGINEER. JOINTS SHALL BE 1/2" LOWER THAN THE TOP OF CURB. THIS JOINT MUST BE SEALED.
2. CONTRACTION JOINT SCORED 1/3 THE DEPTH OF THE CONCRETE.
3. THIS KEYED CONSTRUCTION JOINT WHEN SPECIFIED, SHALL BE PAID FOR AS "EXTRA WORK" IN ACCORDANCE WITH SECTION 104 UNLESS SPECIFICALLY CALLED FOR IN THE SPECIAL PROVISIONS OR SHOWN ON THE PLANS.
4. CURB & GUTTER SHALL BE 6" AND UNREINFORCED UNLESS OTHERWISE SPECIFIED.

6 C504 CURB AND GUTTER DETAILS
NOT TO SCALE

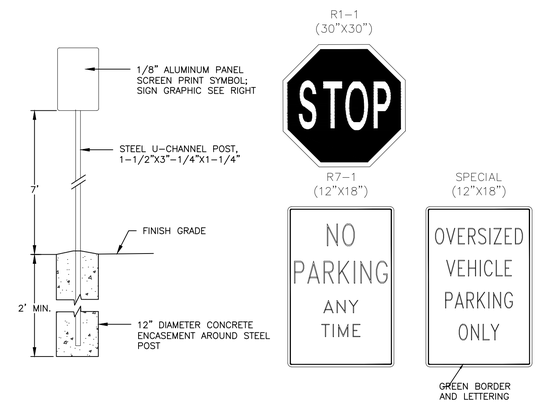

7 C504 PARKING SIGNAGE
NOT TO SCALE

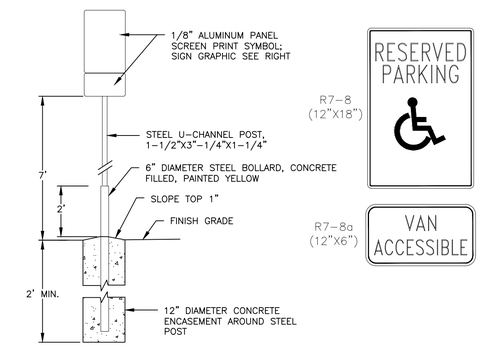

8 C504 ADA PARKING SIGNAGE - VAN ACCESSIBLE
NOT TO SCALE

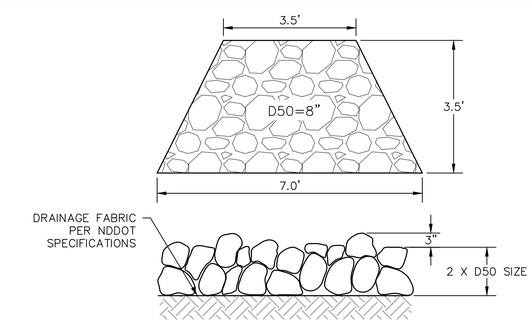

NOTES:
1. TOP OF RIPRAP TO BE AT FLOWLINE OR GRADE AS INDICATED ON PLAN (WITHIN VARIANCE GIVEN). RIPRAP PLACED ABOVE FINAL GRADE WILL NOT BE ACCEPTED.

9 C504 RIPRAP APRON DETAIL
NOT TO SCALE

REGISTERED PROFESSIONAL ENGINEER
MARK V. HINES
PE-29231
DATE 5/2/2023
NORTH DAKOTA

LONG LAKE NWR

SITE DETAILS

NEW HEADQUARTERS AND VISITORS CENTER

DESIGNED	DRAWN	CHECKED	DATE		SUB-SHEET
MH	JB	BD	2022.05.09		C504
					SHEET 11 OF 66

C:\dowl_pw\d0394468\SA-CS-UT-DT-27085.dwg

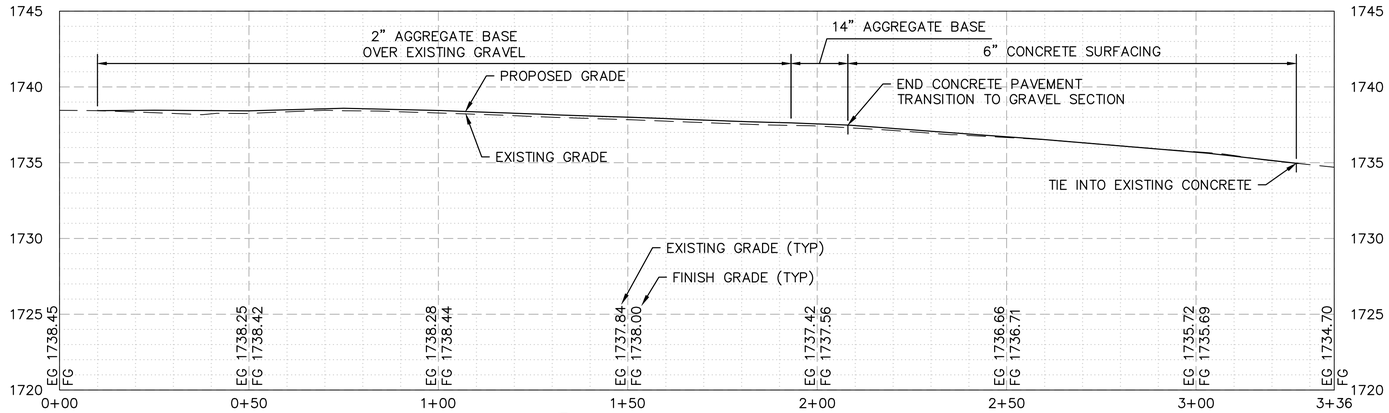

1 C505 ALIGNMENT A PROFILE

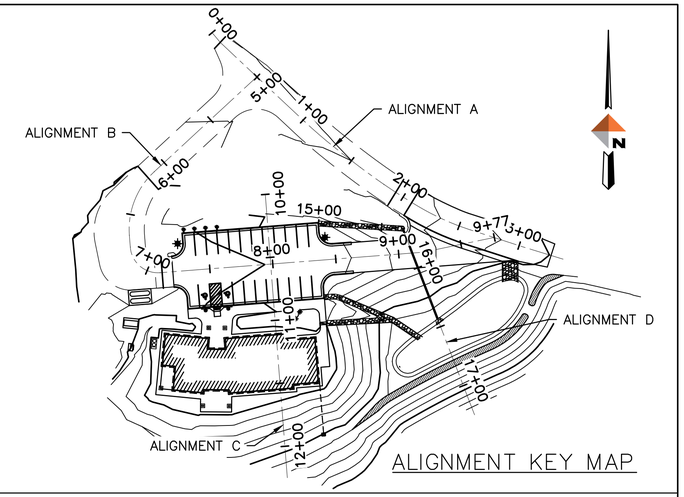

ALIGNMENT KEY MAP

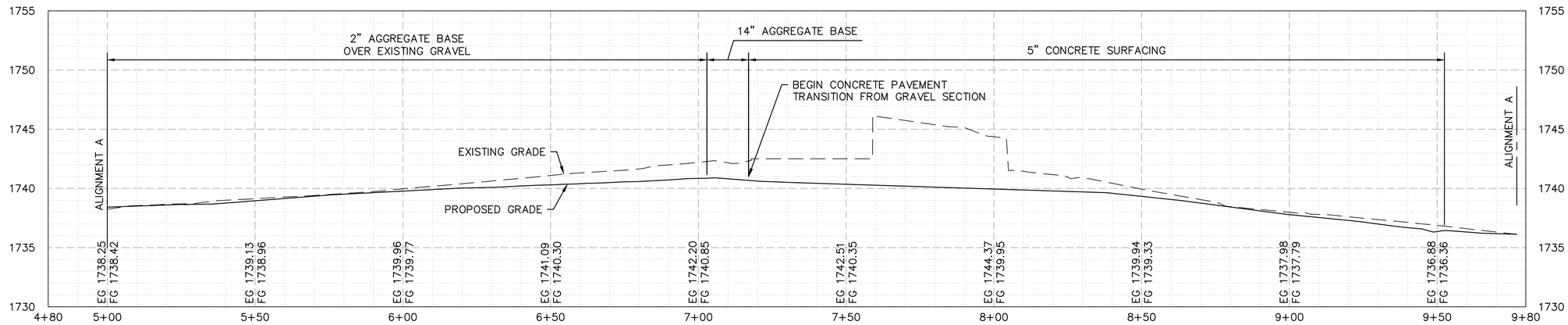

2 C505 ALIGNMENT B PROFILE

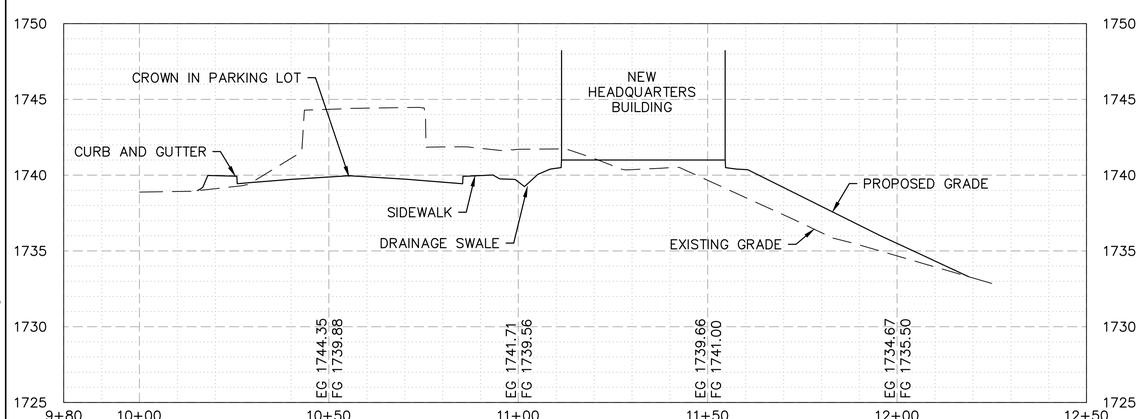

3 C505 ALIGNMENT C PROFILE

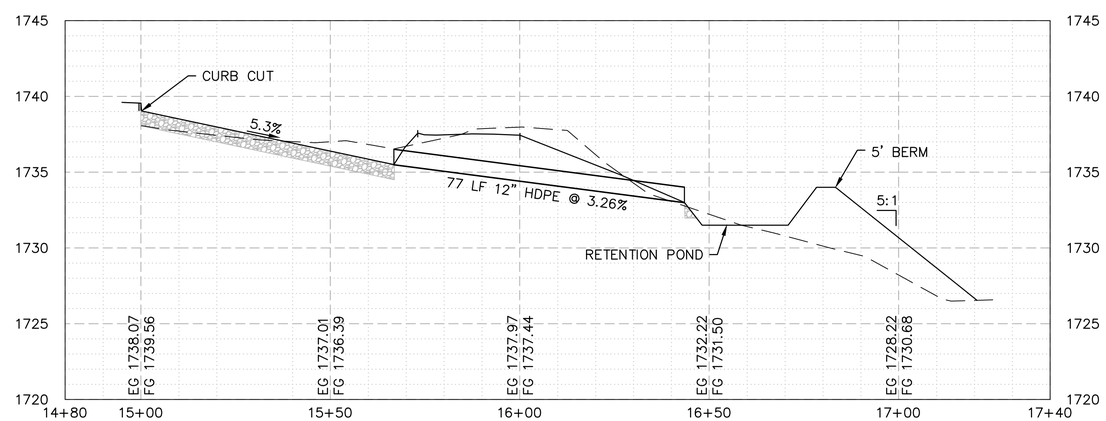

4 C505 ALIGNMENT D PROFILE

REGISTERED PROFESSIONAL ENGINEER
MARK V. HINES
PE-29231
DATE 5/6/2022
NORTH DAKOTA

C:\dowl_pw\d0394468\SA-CS-UT-DT-27085.dwg

LONG LAKE NWR **SITE PROFILES** NEW HEADQUARTERS AND VISITORS CENTER					SUB-SHEET C505
DESIGNED MH	DRAWN JB	CHECKED BD	DATE 2022.05.09		SHEET 12 OF 66

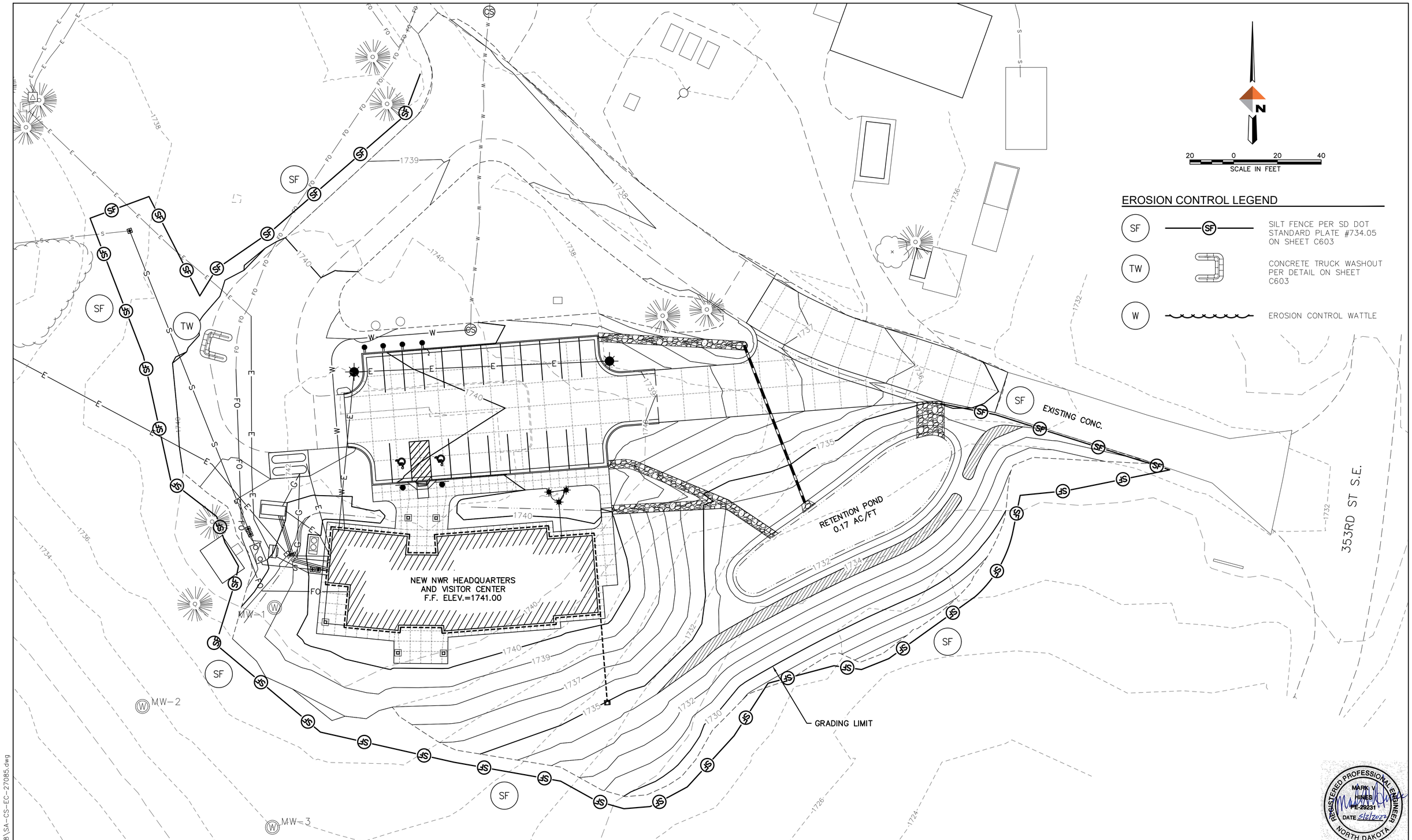

C:\dowl_pw\d0394468\SA-CS-EC-27085.dwg

LONG LAKE NWR **EROSION CONTROL PLAN** NEW HEADQUARTERS AND VISITORS CENTER					SUB-SHEET C601
DESIGNED MH	DRAWN JB	CHECKED BD	DATE 2022.05.09		SHEET 13 OF 66

RETENTION OF RECORDS

1. A COPY OF THE STORM WATER POLLUTION PREVENTION PLAN (SWPPP) SHALL BE KEPT AT A CENTRAL LOCATION ON THE CONSTRUCTION SITE FROM THE DATE OF PROJECT INITIATION TO THE DATE OF FINAL STABILIZATION.
2. PERMITTEES SHALL RETAIN COPIES OF THE SWPPP AND ANY REVISIONS TO THE PLAN, AND ALL REPORTS REQUIRED BY THE PERMIT, AND RECORDS OF ALL DATA USED TO COMPLETE THE NOTICE OF INTENT FOR A PERIOD OF A LEAST THREE YEARS FROM THE DATE THE SITE IS FINALLY STABILIZED. THIS PERIOD MAY BE EXTENDED BY THE DIRECTOR OF THE EPA AT ANY TIME.

GENERAL NOTES

1. THE OWNER/CONTRACTOR IS RESPONSIBLE FOR OBTAINING A STATE OF NORTH DAKOTA DEPARTMENT OF ENVIRONMENTAL QUALITY (NDDEQ) GENERAL PERMIT FOR STORMTWATER DISCHARGES ASSOCIATED WITH CONSTRUCTION ACTIVITIES (NDR11–0000) PRIOR TO CONSTRUCTION. FORMS MUST BE SUBMITTED TO THE NDDEQ AT LEAST 15 DAYS PRIOR TO START OF CONSTRUCTION.
2. THE OWNER/CONTRACTOR SHALL PROVIDE THE AGENCY HAVING JURISDICTION WITH A COPY OF THE NDDEQ STORM WATER CONSTRUCTION PERMIT LETTER OF APPROVAL AND CERTIFICATION FROM THE STATE. THE CONTRACTOR IS RESPONSIBLE FOR ALL FEES ASSOCIATED WITH THESE PERMITS.
3. A COPY OF THE NDDEQSTORM WATER CONSTRUCTION PERMIT, COUNTY BUILDING PERMIT, AND THE APPROVED SWPPP WITH AN EROSION AND SEDIMENT PLAN SHALL BE KEPT ON SITE AND UPDATED AT ALL TIMES.
4. THE SWPPP ADMINISTRATOR IS RESPONSIBLE FOR IMPLEMENTING AND MAINTAINING EROSION AND SEDIMENT CONTROL MEASURES AT ALL TIMES DURING CONSTRUCTION. THE SWPPP SHALL BE MODIFIED IN COMPLIANCE TO THE COUNTY AND STATE PERMITS.
5. THE NDDEQ SURFACE WATER QUALITY PROGRAM AND THE COUNTY SHALL BE NOTIFIED FOR THE FOLLOWING ITEMS:
   A) AMENDING PERMIT CERTIFICATION – AMENDMENTS TO THE PERMIT SHALL BE IN WRITING NOTING CHANGES TO THE INFORMATION PROVIDED IN THE PERMIT APPLICATION, INCLUDING THE LEGAL CONTACT, THE PROJECT LEGAL DESCRIPTION OR MAP ORIGINALLY SUBMITTED WITH THE APPLICATION, OR THE PLANNED TOTAL DISTURBED ACREAGE.
   B) NONCOMPLIANCE NOTIFICATION – THE PERMITTEE SHALL NOTIFY NDDEQ AND THE COUNTY WITHIN 24 HOURS TO REPORT THE FOLLOWING INSTANCES OF NON–COMPLIANCE:
   – ANY NONCOMPLIANCE WHICH MAY DANGER THE HEALTH OF THE ENVIRONMENT
   – ANY SPILL OR DISCHARGES OF HAZARDOUS SUBSTANCES OR CHEMICALS TO THE WATERS OF THE STATE
   – ANY DISCHARGE OF STORM WATER WHICH MAY EXCEED THE WATER QUALITY STANDARD
6. THE OPERATOR SHALL POST A SIGN OR OTHER NOTICE NEAR THE MAIN ENTRANCE OF THE CONSTRUCTION SITE ACCORDING TO THE EPA – POSTING REQUIREMENTS. THE APPROVED SWPPP WILL BE LOCATED IN THE SITE CONSTRUCTION OFFICE.
7. AT THE COMPLETION OF THE PROJECT, THE OWNER/CONTRACTOR IS RESPONSIBLE TO SUBMIT A NOTICE OF TERMINATION TO THE NDDEQ. THE OWNER/CONTRACTOR SHALL PROVIDE THE COUNTY WITH A COPY OF THIS INACTIVATION NOTICE.

SWPPP ADMINISTRATOR

A) NAME:_____
TITLE:_____
PH: _____
OPERATOR HAS CONTROL OVER: _____

B) NAME:_____
TITLE:_____
PH: _____
OPERATOR HAS CONTROL OVER: _____

EROSION CONTROL INSPECTOR

A) NAME:_____
TITLE:_____
PH: _____
OPERATOR HAS CONTROL OVER: _____

B) NAME:_____
TITLE:_____
PH: _____
OPERATOR HAS CONTROL OVER: _____

TRAINING

EMPLOYEES AND CONTRACTOR PERSONNEL SHALL BE TRAINED IN THE FOLLOWING AREAS, AT LEAST ONCE PER YEAR:

A) PREVENTIVE MEASURES, INCLUDING SPILL PREVENTION AND RESPONSE, CONSTRUCTION ACTIVITY INSPECTIONS, AND PREVENTIVE MAINTENANCE.
B) POLLUTION CONTROL LAWS AND REGULATIONS.
C) THE CONSTRUCTION ACTIVITY'S SWPPP.
D) FEATURES AND OPERATIONS OF THE CONSTRUCTION ACTIVITY THAT ARE DESIGNED TO MINIMIZE DISCHARGES OF WATER PRIORITY CHEMICALS, PARTICULARLY SPILL PREVENTION PROCEDURES.

FINAL STABILIZATION

FINAL STABILIZATION IS REACHED WHEN ALL GROUND SURFACE DISTURBING ACTIVITIES AT THE SITE HAVE BEEN COMPLETED, AND UNIFORM COVER HAS BEEN ESTABLISH WITH AN INDIVIDUAL PLANT DENSITY OF AT LEAST SEVENTY (70) PERCENT OF PRE–DISTURBANCE LEVELS, OR EQUIVALENT PERMANENT, PHYSICAL EROSION REDUCTION METHODS HAVE BEEN EMPLOYED.

FINAL STABILIZATION PRACTICES FOR OBTAINING A VEGETATIVE COVER SHOULD INCLUDE, AS APPROPRIATE: SEED MIX SELECTION AND APPLICATION METHODS; SOIL PREPARATION AND AMENDMENTS; SOIL STABILIZATION PRACTICES (E.G., CRIMPED STRAW, HYDRO MULCH OR ROLLED EROSION CONTROL PRODUCTS); AND APPROPRIATE SEDIMENT CONTROL BMPS AS NEEDED UNTIL FINAL STABILIZATION IS ACHIEVED; ETC.

COMMON NAME (VARIETY)	SCIENTIFIC NAME	SEASON GROWTH	GROWTH FORM	SEEDS/LB	LBS PLS/ACRE

OVERVIEW OF MINIMUM POLLUTION PREVENTION PROVISIONS

1. IN ADDITION TO PREVENTING SOIL FROM ERODING AND MIGRATING FROM THE SITE DURING CONSTRUCTION, POLLUTANTS THAT COULD BE DISCHARGED IN THE STORM WATER EXITING THE SITE MUST BE MINIMIZED. THESE INCLUDE OIL, GREASE, PAINTS, GASOLINE, CONCRETE TRUCK WASH DOWN, SOLVENTS, LITTER, DEBRIS, SANITARY WASTES, AND MATERIALS USED IN THE MANUFACTURE OF CONCRETE SUCH AS AGGREGATE, CEMENT, AND SAND.
2. THE FULL REQUIREMENTS FOR POLLUTION PREVENTION ON THE CONSTRUCTION SITE ARE CONTAINED IN THE PROJECT "STORM WATER POLLUTION PREVENTION PLAN" (SWPPP). THE REQUIREMENTS OF THE FULL SWPPP ARE TO BE MET BY ANY OPERATOR WORKING ON THE SITE. A BRIEF LISTING OF THE REQUIREMENTS TO BE MET ARE AS FOLLOWS:

A) VEHICLE TRACKING FROM THE SITE IS TO BE PREVENTED.
B) EQUIPMENT MAINTENANCE AND REPAIR IS TO OCCUR ONLY IN DESIGNATED AREAS.
C) WASTE RECEPTACLES SHALL BE PROVIDED AT CONVENIENT LOCATIONS. REGULAR COLLECTION OF WASTES SHALL BE PERFORMED.
D) EQUIPMENT WASH DOWN SHALL OCCUR ON THE SITE IN THE DESIGNATED AREAS. PROVIDE APPROPRIATE CONTROL OF WASH WATER TO PREVENT DRY WEATHER DISCHARGES AND AVOID MIXING WITH STORM WATER.
E) PROVIDE PROTECTED STORAGE FOR CHEMICALS, PAINTS, SOLVENTS, FERTILIZERS, AND OTHER POTENTIALLY TOXIC MATERIALS.
F) PROVIDE ADEQUATELY MAINTAINED SANITARY FACILITIES.

MAINTENANCE & INSPECTION

1. ALL EROSION AND SEDIMENT CONTROL MEASURES SHALL BE INSPECTED AT LEAST ONCE EVERY 14 CALENDAR DAYS AND WITHIN 24 HOURS OF ANY STORM EVENT.
2. ALL CONTROL MEASURES SHALL BE MAINTAINED IN GOOD WORKING ORDER. IF A REPAIR IS NECESSARY, IT SHALL BE INITIATED WITHIN 24 HOURS OF THE INSPECTION REPORT.
3. BUILT UP SEDIMENT SHALL BE REMOVED FROM SILT FENCE AND STRAW BALES WHEN IT HAS REACHED ONE–THIRD THE HEIGHT OF THE FENCE OR THE BALES.
4. SILT FENCE SHALL BE INSPECTED FOR DEPTH OF SEDIMENTS AND TEARS TO SEE IF THE FABRIC IS SECURELY ATTACHED TO THE FENCE POSTS, AND TO SEE THAT THE FENCE POSTS ARE FIRMLY IN THE GROUND.
5. THE DETENTION BASINS AND OUTLET STRUCTURES & PIPES SHALL BE INSPECTED FOR DEPTH OF SEDIMENT. BUILT UP SEDIMENT SHALL BE REMOVED WHEN IT REACHES 10 PERCENT OF THE DESIGN CAPACITY, OR AT THE END OF THE JOB.
6. LANDSCAPING, PLANTING, AND SEEDING SHALL BE INSPECTED FOR BARE SPOTS, WASHOUT, ADEQUACY OF IRRIGATION, AND HEALTHY GROWTH.
7. A MAINTENANCE INSPECTION REPORT SHALL BE MADE AFTER EACH INSPECTION. A COPY OF THE REPORT SHALL BE KEPT ON FILE WITH THE SITE SUPERINTENDENT, AND WILL BE MADE AVAILABLE TO THE OWNER, COUNTY OFFICIALS, AND THE ARCHITECT & PROJECT ENGINEER.
8. THE SITE SUPERINTENDENT SHALL SELECT TWO INDIVIDUALS WHO WILL BE RESPONSIBLE FOR INSPECTIONS, MAINTENANCE AND REPAIR ACTIVITIES, AND FILLING OUT THE INSPECTION & MAINTENANCE REPORT.

MAINTENANCE & INSPECTION REPORTS

ONCE AN INSPECTION HAS BEEN PERFORMED, A REPORT CONTAINING THE FOLLOWING MUST BE RETAINED WITH THE SWPPP FOR UP TO 3 YEARS AFTER THE SITE HAS BEEN FINALLY STABILIZED.

A) NAMES OF PERSONNEL CONDUCTING THE INSPECTION.
B) DATES OF INSPECTION.
C) OBSERVATIONS RELATING TO IMPLEMENTATION OF THE SWPPP.
D) ACTIONS TAKEN
E) INCIDENTS OF NON–COMPLIANCE.

IF NO INCIDENTS OF NON–COMPLIANCE WERE FOUND, THE REPORT SHALL CONTAIN A CERTIFICATION THAT THE SITE IS IN COMPLIANCE WITH THE SWPPP AND THE PERMIT. THE REPORT MUST BE SIGNED IN ACCORDANCE WITH REGULATORY REQUIREMENTS.

MATERIALS INVENTORY

THE MATERIALS OR SUBSTANCES LISTED BELOW ARE EXPECTED TO BE ON–SITE DURING CONSTRUCTION:

CONCRETE	PAINTS
HERBICIDES	DETERGENTS
FUEL & PETROLEUM BASED PRODUCTS	FERTILIZERS
CLEANING SOLVENTS	
_____	_____
_____	_____
_____	_____
_____	_____

CONTRACTOR TO STRIKE OUT AND ADD ITEMS AS NECESSARY.

SCHEDULE OF MAJOR CONSTRUCTION ACTIVITIES

MAJOR ACTIVITY	SCHEDULED COMPLETION DATE	REMARKS
ESTABLISH CLEARANCE LIMITS & AREAS OF NON–DISTURBED AREAS		
CLEAR & GRUB WITHIN AREAS TO BE GRADED		
INSTALL WASTE RECEPTACLES AND SANITARY FACILITIES		
INSTALL VEHICLE WASH AREA BERM		
INSTALL INTERIM EROSION, SILT & POLLUTION CONTROL MEASURES		
MASS GRADE SITE		
INSTALL SITE UTILITIES		
CONSTRUCT BUILDINGS		
CONSTRUCT E.T. TREATMENT BED		
FINISH GRADE SITE		
REMOVE EXCESS EARTHWORK MATERIAL FROM SITE		
CONSTRUCT CURB AND GUTTER		
INSTALL AGGREGATE AND PAVEMENT		
INSTALL FENCING		
INSTALL PERMANENT PLANTING & SEEDING		
AT CONSTRUCTION COMPLETION, REMOVE WASTE RECEPTACLES AND SANITARY FACILITIES.		

THE SCHEDULE OF MAJOR CONSTRUCTION EVENTS SHALL BE COMPLETED BY THE PROJECT SUPERINTENDENT PRIOR TO FILING HIS NOTICE OF INTENT. HE SHALL UPDATE THE SCHEDULE AS NEEDED.

SPILL CLEANUP

IN ADDITION TO THE GOOD HOUSEKEEPING AND MATERIAL MANAGEMENT PRACTICES DISCUSSED ELSEWHERE IN THE SWPPP PLAN, THE FOLLOWING PRACTICES SHALL BE FOLLOWED FOR SPILL PREVENTION AND CLEANUP.

1. MANUFACTURER'S RECOMMENDED METHODS FOR SPILL CLEANUP SHALL BE CLEARLY POSTED, AND SITE PERSONNEL SHALL BE MADE AWARE OF THE PROCEDURES AND THE LOCATION OF THE INFORMATION AND CLEANUP SUPPLIES.
2. MATERIALS AND EQUIPMENT NECESSARY FOR SPILL CLEANUP SHALL BE KEPT IN THE MATERIAL STORAGE AREA ON–SITE. EQUIPMENT AND MATERIALS SHALL INCLUDE, BUT NOT BE LIMITED TO BROOMS, DUST PANS, MOPS, RAKES, GLOVES, GOGGLES, KITTY LITTER, SAND, SAW DUST, AND PLASTIC AND METAL TRASH CONTAINERS SPECIFICALLY FOR THIS PURPOSE.
3. ALL SPILLS SHALL BE CLEANED UP IMMEDIATELY AFTER DISCOVERY.
4. THE SPILL AREA SHALL BE KEPT WELL VENTILATED, AND PERSONNEL WILL WEAR APPROPRIATE PROTECTIVE CLOTHING TO PREVENT INJURY FROM CONTACT WITH A HAZARDOUS SUBSTANCE.
5. SPILLS OF TOXIC OR HAZARDOUS MATERIAL SHALL BE REPORTED TO THE APPROPRIATE STATE OR LOCAL GOVERNMENT AGENCY, REGARDLESS OF SIZE.
6. IF A SPILL OCCURS, THE SPILL PREVENTION PLAN SHALL BE ADJUSTED TO INCLUDE MEASURES TO PREVENT THIS PARTICULAR TYPE OF SPILL FROM REOCCURRING, AND HOW TO CLEAN UP THE SPILL IF THERE IS ANOTHER ONE. A DESCRIPTION OF THE SPILL, WHAT CAUSED IT, AND THE CLEANUP MEASURES SHALL ALSO BE INCLUDED.
7. THE SITE SUPERINTENDENT SHALL BE THE SPILL PREVENTION AND CLEANUP COORDINATOR. HE WILL DESIGNATE AT LEAST TWO OTHER SITE PERSONNEL WHO WILL RECEIVE SPILL PREVENTION AND CLEANUP TRAINING. THESE INDIVIDUALS WILL EACH BECOME RESPONSIBLE FOR A PARTICULAR PHASE OF PREVENTION AND POSTED IN THE MATERIAL STORAGE AREA AND IN THE OFFICE.

SPILL PREVENTION

THE FOLLOWING MATERIAL MANAGEMENT PRACTICES SHALL BE USED TO REDUCE THE RISK OF SPILLS OR OTHER ACCIDENTAL EXPOSURE OF MATERIALS AND SUBSTANCES TO STORM WATER RUNOFF.

1. GOOD HOUSEKEEPING: THE FOLLOWING HOUSEKEEPING PRACTICES SHALL BE FOLLOWED ON–SITE DURING THE CONSTRUCTION OF THE PROJECT:

A) AN EFFORT SHALL BE MADE TO STORE ONLY ENOUGH PRODUCT REQUIRED TO DO THE JOB.
B) ALL MATERIAL STORED ON–SITE SHALL BE STORED IN A NEAT, ORDERLY MANNER IN THEIR APPROPRIATE CONTAINERS AND, IF POSSIBLE, UNDER ROOF OR OTHER ENCLOSURE.
C) PRODUCTS SHALL BE KEPT IN THEIR ORIGINAL CONTAINERS WITH THE ORIGINAL MANUFACTURER'S LABEL.
D) SUBSTANCES SHALL NOT BE MIXED WITH ONE ANOTHER UNLESS RECOMMENDED BY THE MANUFACTURER.
E) WHENEVER POSSIBLE, ALL OF A PRODUCT SHALL BE USED UP BEFORE DISPOSING OF THE CONTAINER.
F) MANUFACTURER'S RECOMMENDATIONS FOR PROPER USE AND DISPOSAL SHALL BE FOLLOWED.
G) THE SITE SUPERINTENDENT SHALL DAILY INSPECT ON–SITE MATERIAL TO ENSURE PROPER USE, STORAGE, AND DISPOSAL.

2. HAZARDOUS PRODUCTS: THESE PRACTICES SHALL BE FOLLOWED TO REDUCE THE RISKS ASSOCIATED WITH HAZARDOUS MATERIALS:

A) PRODUCTS SHALL BE KEPT IN ORIGINAL CONTAINERS UNLESS THEY ARE NOT RE–SEALABLE.
B) ORIGINAL LABELS AND MATERIAL SAFETY DATA SHALL BE RETAINED. THEY CONTAIN IMPORTANT PRODUCT INFORMATION.
C) IF SURPLUS PRODUCT MUST BE DISPOSED OF, MANUFACTURER'S LOCAL, STATE, AND FEDERAL RECOMMENDED METHODS FOR PROPER DISPOSAL WILL BE FOLLOWED.

SPILL CONTAINMENT PLAN

1. THE CONSTRUCTION SITE MANAGEMENT TEAM SHALL DEVELOP A SPILL PREVENTION PLAN AND ENSURE THAT THE PLAN IS COMMUNICATED TO ALL FIELD PERSONNEL.
2. THE PLAN SHALL IDENTIFY THE TYPES OF HAZARDOUS MATERIALS, WHICH MAY BE USED ON THE PROJECT.
3. DEVELOP A STRATEGY TO STOP LEAKS AT THE SOURCE OF THE SPILL.
4. DEVELOP A STRATEGY TO CONTAIN THE MATERIALS ALREADY SPILLED USING AVAILABLE MATERIALS AND EQUIPMENT.
5. CONTACT THE LOCAL FIRE MARSHALL TO REVIEW ON–SITE STORAGE AREAS TO DETERMINE SPECIFIC REQUIREMENTS AND APPROPRIATE CONTAINMENT TECHNIQUES.
6. COMPLY WITH SUGGESTIONS AND REQUIREMENTS SET BY LOCAL FIRE DEPARTMENT.
7. UPDATE SPILL CONTAINMENT DURING THE COURSE OF CONSTRUCTION AS CHANGES OCCUR IN THE TYPES OF CHEMICALS BEING STORED.
8. IF A SPILL OCCURS FOLLOW PROPER PROCEDURE AS REQUIRED IN THE SPILL CONTAINMENT PLAN.
9. DISPOSE OF MATERIALS PER AGENCY OR MANUFACTURER'S INSTRUCTION.
10. ALL SPILLS REGARDLESS OF SIZE SHOULD BE REPORTED TO THE PROPER AGENCIES.

EQUIPMENT MAINTENANCE PROCEDURES

1. PROPERLY DISPOSE OF OR RECYCLE USED OILS, HYDRAULIC FLUIDS, AND GEAR LUBRICANTS. DO NOT DUMP FUELS AND LUBRICANTS INTO PITS OR ON THE GROUND. NEVER PLACE USED OIL IN A DUMPSTER OR POUR DOWN A STORM DRAIN.
2. PROPERLY DISPOSE OF OR RECYCLE USED BATTERIES.
3. DO NOT BURY USED TIRES.
4. DO NOT DISPOSE OF EXTRA PAINTS AND COATINGS BY DUMPING LIQUID ONTO THE GROUND OR THROWING IN DUMPSTERS. ALLOW COATINGS TO DRY OR HARDEN BEFORE DISPOSAL INTO COVERED DUMPSTERS.
5. REPAIR LEAKS OF HYDRAULIC FLUIDS, OILS, AND OTHER FLUIDS AS SOON AS POSSIBLE.
6. USE STEAM OR HIGH PRESSURE WATER INSTEAD OF THINNERS AND SOLVENTS TO WASH DOWN HEAVY EQUIPMENT. LOCATE THE WASH DOWN AREA IN A CONTAINED AREA, AND DISPOSE OF WASH WATER AND DETERGENTS TO THE SANITARY SEWER SYSTEM ONLY AFTER GRIT IS REMOVED.
7. PROVIDE SPILL CONTAINMENT DIKES AROUND STORED OIL AND CHEMICAL DRUMS.
8. MAINTAIN WASTE OIL CONTAINERS IN LEAK PROOF CONDITION.
9. CLEAN EQUIPMENT RADIATORS TO MAXIMIZE COOLING EFFICIENCY AND PREVENT BOIL OVER.
10. INSPECT EQUIPMENT FOR DAMAGED HOSES AND LEAKY GASKETS DAILY. REPAIR OR REPLACE AS NEEDED.

PRODUCT SPECIFIC PRACTICES

THE FOLLOWING WILL BE FOLLOWED ON–SITE.

1. PETROLEUM PRODUCTS: ALL ON–SITE VEHICLES SHALL BE MONITORED FOR LEAKS AND RECEIVE REGULAR PREVENTIVE MAINTENANCE TO REDUCE THE CHANCE OF LEAKAGE. PETROLEUM PRODUCTS, SHALL BE STORED IN TIGHTLY SEALED CONTAINERS THAT ARE CLEARLY LABELED. ANY ASPHALT SUBSTANCE USED ON–SITE SHALL BE APPLIED ACCORDING TO THE MANUFACTURER'S RECOMMENDATIONS.
2. FERTILIZERS: FERTILIZERS USED SHALL BE APPLIED ONLY IN THE AMOUNTS RECOMMENDED BY THE MANUFACTURER OR LANDSCAPE ARCHITECT. ONCE APPLIED, FERTILIZER SHALL BE WORKED INTO THE SOIL TO LIMIT EXPOSURE TO STORM WATER. STORAGE WILL BE IN A COVERED SHED. THE CONTENTS OF ANY PARTIALLY USED BAGS OF FERTILIZER SHALL BE TRANSFERRED TO A PROPERLY LABELED, SEALABLE PLASTIC BIN TO AVOID SPILLS.
3. PAINTS: ALL CONTAINERS SHALL BE TIGHTLY SEALED AND STORED WHEN NOT REQUIRED FOR USE. EXCESS PAINT SHALL NOT BE DISCHARGED INTO THE STORM WATER SYSTEM, BUT WILL BE PROPERLY DISPOSED OF ACCORDING TO THE MANUFACTURER'S INSTRUCTIONS AND LOCAL, STATE, AND FEDERAL REGULATIONS.
4. CONCRETE TRUCKS: CONCRETE TRUCKS SHALL ONLY BE ALLOWED TO WASH OUT OR DISCHARGE SURPLUS CONCRETE OR DRUM WASH WATER AT THE APPROVED SITE WASH OUT LOCATION. THE LOCATION SHALL BE THOROUGHLY CLEANED AND RESTORED AT CLOSE OF PROJECT AND EXCESS CONCRETE DISPOSED OF OFF–SITE AT AN APPROVED LOCATION.
5. WASTE MATERIALS: ALL WASTE MATERIALS SHALL BE COLLECTED AND STORED IN A METAL DUMPSTER RENTED FROM A LICENSED SOLID WASTE MANAGEMENT COMPANY IN BURLEIGH COUNTY, NORTH DAKOTA. THE DUMPSTER SHALL MEET ALL COUNTY WASTE MANAGEMENT REGULATIONS. ALL TRASH AND CONSTRUCTION DEBRIS FROM THE SITE SHALL BE DEPOSITED IN THE DUMPSTER. THE DUMPSTER SHALL BE EMPTIED AS NECESSARY AT A MINIMUM OF BIWEEKLY OR MORE OFTEN IF NECESSARY, AND THE TRASH WILL BE HAULED TO A LICENSED LANDFILL. NO CONSTRUCTION DEBRIS OR WASTE MATERIALS ARE TO BE BURIED ON–SITE. ALL PERSONNEL SHALL BE INSTRUCTED BY THE SITE SUPERINTENDENT REGARDING THE CORRECT PROCEDURE FOR WASTE DISPOSAL. NOTICES STATING THESE PROCEDURES SHALL BE POSTED IN THE OFFICE TRAILER AND THE SITE SUPERINTENDENT WILL BE RESPONSIBLE FOR SEEING THAT THESE PROCEDURES ARE FOLLOWED.
6. HAZARDOUS WASTE: ALL HAZARDOUS WASTE MATERIALS SHALL BE DISPOSED OF IN THE MANNER SPECIFIED BY LOCAL, COUNTY, STATE AND FEDERAL REGULATIONS, AND BY THE MANUFACTURER. SITE PERSONNEL SHALL BE INSTRUCTED IN THESE PRACTICES BY THE SITE SUPERINTENDENT, WHO WILL BE RESPONSIBLE FOR SEEING THESE PRACTICES ARE FOLLOWED.
7. SANITARY WASTE: ALL SANITARY WASTE SHALL BE COLLECTED FROM THE PORTABLE UNITS A MINIMUM OF THREE TIMES PER WEEK BY A LICENSED BURLEIGH COUNTY WASTE MANAGEMENT CONTRACTOR, AS REQUIRED BY LOCAL REGULATION.
8. OFFSITE VEHICLE TRACKING: A STABILIZED CONSTRUCTION ENTRANCE WILL BE PROVIDED TO HELP REDUCE VEHICLE TRACKING OF SEDIMENTS. THE PAVED ROADWAYS ADJACENT TO THE SITE ENTRANCE SHALL BE SWEPT AS NEEDED TO REMOVE ANY EXCESS MUD, DIRT, OR ROCK TRACKED FROM THE SITE. HAUL TRUCKS AND DUMP TRUCKS REMOVING MATERIAL FROM THE CONSTRUCTION SITE SHALL BE COVERED WITH A TARPAULIN.

RELEASE OF HAZARDOUS SUBSTANCES OR OIL

1. THE PERMITTEE SHALL PREVENT OR MINIMIZE THE DISCHARGE OF HAZARDOUS SUBSTANCES OR OIL FROM THE SITE. IF A PERMITTEE ALLOWS DISCHARGES CONTAINING AN AMOUNT EQUAL TO OR IN EXCESS OF A REPORTABLE QUANTITY ESTABLISHED UNDER 40 CFR 110, 40 CFR 117, OR 40 CFR 302, DURING A 24 HOUR PERIOD, THE NATIONAL RESPONSE CENTER (NRC) MUST BE NOTIFIED (PH 800–424–8802).
2. WITHIN 72 HOURS OR KNOWLEDGE OF THE RELEASE, THE PERMITTEE SHALL PREPARE AND SUBMIT A SATISFACTORY WRITTEN PROPOSAL OF REVISIONS TO BE INCORPORATED INTO THE SWPPP TO PREVENT REOCCURRENCES OF SUCH RELEASES. THE CIRCUMSTANCES LEADING TO THE RELEASE, RESPONSES TO BE EMPLOYED FOR SUCH RELEASES, AND MEASURES TO PREVENT THE REOCCURRENCE OF SUCH RELEASES SHALL BE DOCUMENTED. AFTER A SUITABLE PROPOSAL IS ACCEPTED BY THE OWNER AND ENGINEER, (AND WITHIN 14 CALENDAR DAYS OF THE RELEASE) IT SHALL BECOME AN OFFICIAL REVISION TO THE SWPPP AND CONFORMANCE TO ITS PROVISIONS SHALL BE REQUIRED.

ALLOWABLE NON-STORMWATER DISCHARGES

1. THE ONLY DISCHARGES ALLOWED UNDER THE GENERAL PERMIT, OTHER THAN STORM WATER DISCHARGES ARE AS FOLLOWS:

A) FIRE FIGHTING ACTIVITY RUNOFF
B) FIRE HYDRANT FLUSHING
C) VEHICLE WASH WATER IF DETERGENTS ARE NOT USED
D) DUST CONTROL RUNOFF IN ACCORDANCE WITH PERMIT CONDITIONS
E) POTABLE WATER SOURCES INCLUDING WATERLINE FLUSHING
F) ROUTINE EXTERNAL BUILDING WASH DOWN THAT DO NOT INVOLVE DETERGENTS
G) NON–DETERGENT PAVEMENT WASH WATER (WHERE SPILLS/LEAKS OF TOXIC OR HAZARDOUS MATERIALS HAVE NOT OCCURRED, UNLESS ALL SPILLED MATERIAL HAD BEEN REMOVED)
H) AIR CONDITIONING CONDENSATE
I) UNCONTAMINATED GROUND WATER OR SPRING WATER
J) FOUNDATION OR FOOTER DRAIN WATER (PROVIDING THERE WAS NO CONTAMINATION WITH PROCESS MATERIALS SUCH AS SOLVENTS).

2. ALLOWABLE NON–STORMWATER DISCHARGES MUST BE DIRECTLY RELATED TO AND ORIGINATE FROM THE CONSTRUCTION OF THE SITE AS DEPICTED IN THESE PLANS, OR BE A DEDICATED SUPPORT ACTIVITY TO THE CONSTRUCTION OF THE SITE.

REGISTERED PROFESSIONAL ENGINEER
MARK V. HINES
PE-29231
DATE 5/6/2022
NORTH DAKOTA

LONG LAKE NWR					SUB-SHEET
EROSION CONTROL NOTES					C602
NEW HEADQUARTERS AND VISITORS CENTER					
DESIGNED MH	DRAWN JB	CHECKED BD	DATE 2022.05.09		SHEET 14 OF 66

C:\dowl_pw\d0394468\SA-CS-EC-27085.dwg

MANUAL HIGH FLOW SILT FENCE INSTALLATION

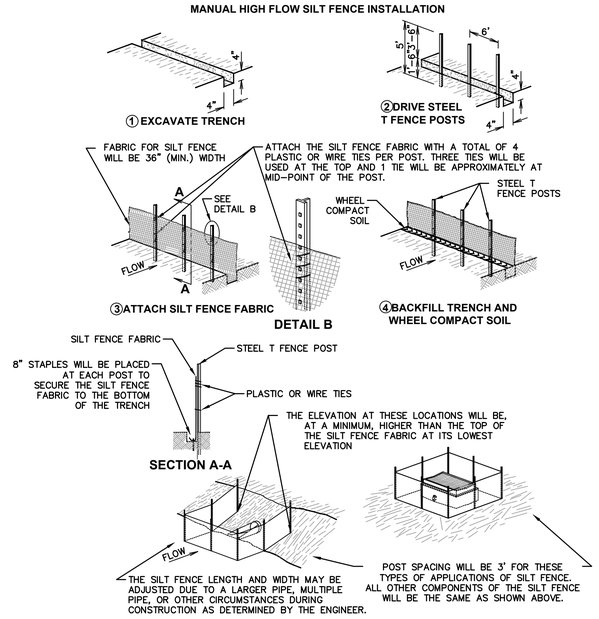

1 / C603 SIDEWALK DRAIN
NTS

MACHINE SLICED HIGH FLOW SILT FENCE INSTALLATION

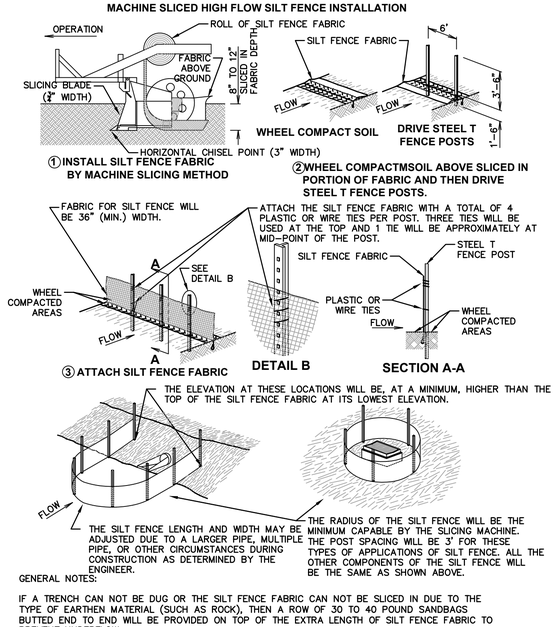

GENERAL NOTES:

IF A TRENCH CAN NOT BE DUG OR THE SILT FENCE FABRIC CAN NOT BE SLICED IN DUE TO THE TYPE OF EARTHEN MATERIAL (SUCH AS ROCK), THEN A ROW OF 30 TO 40 POUND SANDBAGS BUTTED END TO END WILL BE PROVIDED ON TOP OF THE EXTRA LENGTH OF SILT FENCE FABRIC TO PREVENT UNDERFLOW.

2 / C603 HIGH FLOW SILT FENCE
NTS

CONCRETE TRUCK CLEANING AREA CONSTRUCTION SPECIFICATIONS:

1. BUILD A THREE SIDED DIKE 12'X12'.
2. BUILD DIKES TO BE 18" HIGHER THAN EXISTING GRADE.
3. DIKE SHOULD SLOPE DOWNWARD TOWARDS THE BACK OF THE WASH AREA SO WATER DOESN'T RUN OUT OF CLEANING AREA.
4. LINE THE PIT WITH PLASTIC SHEETING OF AT LEAST 10-MIL THICKNESS THAT HAS NO SEAMS.
5. MOVE TRUCK WASHOUT AS NECESSARY FOR CONSTRUCTION PHASING.
6. IF THE TRUCK WASH IS LOCATED ON FLAT GROUND, THAN A FOURTH DIKE SHALL BE CONSTRUCTED TO CONTAIN WASHOUT LIQUIDS.

MAINTENANCE:

1. INSPECT DIKES WEEKLY, AND AFTER ANY MAJOR STORM TO ENSURE THAT THEY ARE INTACT AND WILL NOT ALLOW ANY WATER TO RUN OUT OF CLEANING AREA.
2. THOROUGHLY CLEAN AND RESTORE AT THE CLOSE OF THE PROJECT AND DISPOSE OF EXCESS CONCRETE AT AN APPROVED OFF-SITE LOCATION.

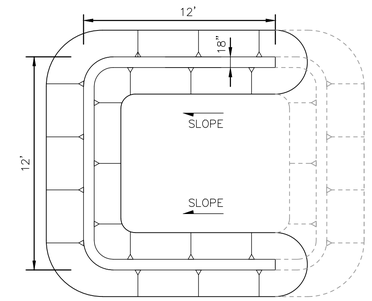

COMPACTED EARTH DIKE WITH 2:1 (H:V) SIDE SLOPES

5 / C603 CONCRETE TRUCK WASH
NTS

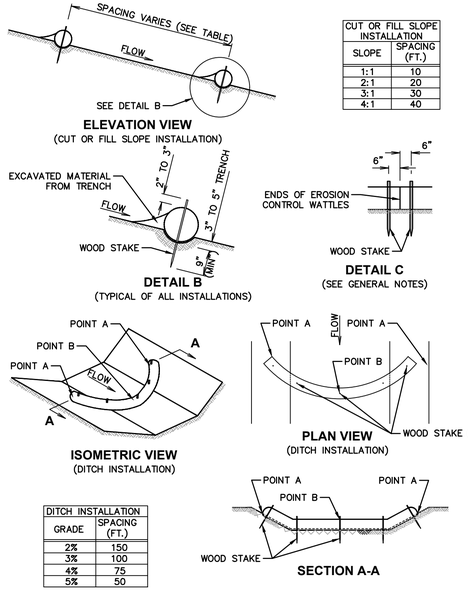

CUT OR FILL SLOPE INSTALLATION	
SLOPE	SPACING (FT.)
1:1	10
2:1	20
3:1	30
4:1	40

DITCH INSTALLATION	
GRADE	SPACING (FT.)
2%	150
3%	100
4%	75
5%	50

3 / C603 EROSION CONTROL WATTLE
NTS

GENERAL NOTES:

AT CUT OR FILL SLOPE INSTALLATIONS, WATTLES WILL BE INSTALLED ALONG THE CONTOUR AND PERPENDICULAR TO THE WATER FLOW.

AT DITCH INSTALLATIONS, POINT A MUST BE HIGHER THAN POINT B TO ENSURE THAT WATER FLOWS OVER THE WATTLE AND NOT AROUND THE ENDS.

THE CONTRACTOR WILL DIG A 3' TO 5" TRENCH, INSTALL THE WATTLE TIGHTLY IN THE TRENCH SO THAT DAYLIGHT CAN NOT BE SEEN UNDER THE WATTLE, AND THEN COMPACT THE SOIL EXCAVATED FROM THE TRENCH AGAINST THE WATTLE ON THE UPHILL SIDE. SEE DETAIL B.

THE STAKES WILL BE 1"x2" OR 2"X2" WOOD STAKES, HOWEVER, OTHER TYPES OF STAKES SUCH AS REBAR MAY BE USED ONLY IF APPROVED BY THE ENGINEER. THE STAKES WILL BE PLACED 6" FROM THE ENDS OF THE WATTLES AND THE SPACING OF THE STAKES ALONG THE WATTLES WILL BE 3' TO 4'.

WHERE INSTALLING RUNNING LENGTHS OF WATTLES, THE CONTRACTOR WILL BUTT THE SECOND WATTLE TIGHTLY AGAINST THE FIRST AND WILL NOT OVERLAP THE ENDS. SEE DETAIL C.

THE CONTRACTOR AND OWNER OR ENGINEER WILL INSPECT THE EROSION CONTROL WATTLES IN ACCORDANCE WITH THE STORM WATER PERMIT. THE CONTRACTOR WILL, REMOVE, DISPOSE, OR RESHAPE THE ACCUMULATED SEDIMENT WHEN NECESSARY AS DETERMINED BY THE OWNER OR ENGINEER.

SEDIMENT REMOVAL, DISPOSAL, OR NECESSARY SHAPING WILL BE AS DIRECTED BY THE OWNER OR ENGINEER. ALL COSTS FOR REMOVING ACCUMULATED SEDIMENT, DISPOSAL OR SEDIMENT, AND NECESSARY SHAPING WILL BE INCIDENTAL TO THE CONTRACT PRICE.

ALL COSTS FOR FURNISHING AND INSTALLING THE EROSION CONTROL WATTLES INCLUDING LABOR, EQUIPMENT, AND MATERIALS WILL BE INCIDENTAL TO THE CONTRACT PRICE.

CONTRACTOR SHALL COORDINATE WITH OWNER UPON COMPLETION OF THE PROJECT TO ENSURE ALL EROSION CONTROL IS IN GOOD CONDITION AND READY FOR SEEDING. SEEDING SHALL BE BY USFWS PERSONNEL UPON COMPLETION OF CONTRACTOR ACTIVITIES AT THE SITE.

4 / C603 EROSION CONTROL NOTES

REGISTERED PROFESSIONAL ENGINEER
MARK HINES
PE-29231
DATE 5/2/2022
NORTH DAKOTA

LONG LAKE NWR					SUB-SHEET
EROSION CONTROL DETAILS					C603
NEW HEADQUARTERS AND VISITORS CENTER					
DESIGNED MH	DRAWN JB	CHECKED BD	DATE 2022.05.09		SHEET 15 OF 66

C:\dowl_pw\d0394468\SA-CS-EC-27085.dwg

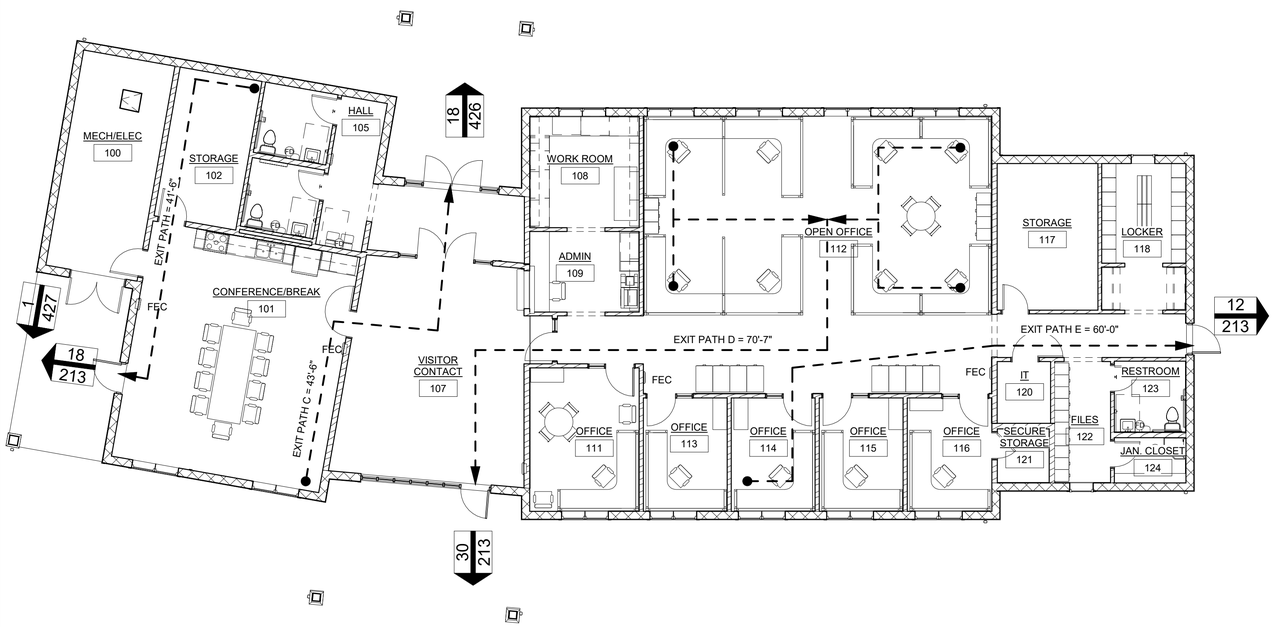

1 LIFESAFETY PLAN
1/8" = 1'-0"

APPLICABLE BUILDING CODES

IBC	INTERNATIONAL BUILDING CODE	2018
IEC	INTERNATIONAL ELECTRIC CODE	2017
IPC	INTERNATIONAL PLUMBING CODE	2018
ADA	AMERICANS WITH DISABILITIES ACT ACCESSIBILITY GUIDELINES	2010
NFPA 13	INSTALLATION OF SPRINKLER SYSTEMS	2019
NFPA 70	NATIONAL ELECTRICAL CODE	2017
NFPA 72	NATIONAL FIRE ALARM AND SIGNALING CODE	2019
NFPA 90A	STANDARD FOR THE INSTALLATION OF AIR-CONDITIONING AND VENTILATING SYSTEMS	2018
NFPA 101	LIFE SAFETY CODE	2018

USE GROUP / OCCUPANCY - Chapter 3 (IBC 2018)

B BUSINESS ENTIRE BUILDING 4,975 sq. ft. (GROSS AREA)

CONSTRUCTION TYPE - Chapter 6 (IBC 2018)

TYPE VB

FIRE SUPPRESSION - Chapter 9 (IBC 2018)

Non-Sprinklered

HEIGHT / STORIES - Chapter 5 (IBC 2018)

Allowable Height (Table 504.3): 40'-0" Designed Height: 26'-10" +/-
Allowable Stories (Table 504.4): 2 Designed Stories: 1

AREA - Chapter 5 (IBC 2018)

Allowable Area (Table 506.2): B @ NS = 9,000 sq. ft.
B @ S1 = 36,000 sq. ft.
B @ SM = 27,000 sq. ft. Designed Area: 4,975 sq. ft.

* PER CODE NO SPRINKLERS REQUIRED

OCCUPANCY SEPARATION - Chapter 5 - Table 508.4 (IBC 2018)

NONE REQUIRED

FIRE RESISTANCE RATINGS - Chapter 6 - Table 601 (IBC 2018)

Structural Frame	0
Bearing Walls	
Interior	0
Exterior	0
Non-Bearing Walls and Partitions	0
Floor Construction	0
Roof Construction	0

EXTERIOR WALL RATINGS - Chapter 6 - Table 602 (IBC 2018)

Fire Separation Distance	Type of Construction	Required	Designed
Greater than 30'	VB	0	0

OCCUPANCY CALCULATIONS - Chapter 10 (Tables 1004.5, 1006.2.1, 1006.3.2, 1006.3.3(1), 1006.3.3(2)) - IBC 2018

NUMBER	NAME	AREA	OCCUPANT LOAD FACTOR	OCCUPANCY
100	MECH/ELEC	226 SF	300 gross	1
101	CONFERENCE/BREAK	561 SF	15 net	37
102	STORAGE	140 SF	300 gross	1
103	RESTROOM	58 SF		
104	RESTROOM	57 SF		
105	HALL	78 SF		
106	VESTIBULE	113 SF		
107	VISITOR CONTACT	432 SF	15 net	29
108	WORK ROOM	136 SF	150 gross	1
109	ADMIN	99 SF	150 gross	1
111	OFFICE	175 SF	150 gross	2
112	OPEN OFFICE	1125 SF	150 gross	7
113	OFFICE	106 SF	150 gross	1
114	OFFICE	106 SF	150 gross	1
115	OFFICE	106 SF	150 gross	1
116	OFFICE	108 SF	150 gross	1
117	STORAGE	165 SF	300 gross	2
118	LOCKER	136 SF	150 gross	1
119	HALL	92 SF		
120	IT	37 SF	300 gross	1
121	SECURE STORAGE	31 SF	300 gross	1
122	FILES	76 SF	300 gross	1
123	RESTROOM	56 SF		
124	JAN. CLOSET	36 SF	300 gross	1
Total Occupants			**90**	

EXIT ACCESS TRAVEL DISTANCE - Chapter 10 - Table 1017.2 (IBC 2018)

B Occupancy	Non-Sprinklered	200 feet
	Fully Sprinklered	250 feet
	Maximum Distance	70 feet

EXIT WIDTH REQUIREMENTS - Chapter 10 - Section 1005 (IBC 2018)

	# of Occ.	Inches/Occ.	Min. Width	# of Exits	Min. Width / Exit	Design Width
Door Egress	89	0.15"	13.35"	3	36"	108"

PLUMBING FIXTURES - Chapter 29 - Table 2902.1 (IBC 2018)

Water Closets 1 per 25 for the first 50 and 1 per 50 for the remainder exceeding 50	**Required (89 occupants) = 3**	**Provided = 3**
Lavatories 1 per 40 for the first 80 and 1 per 80 for the remainder exceeding 80	**Required (89 occupants) = 3**	**Provided = 3**
Drinking Fountains 1 per 100	**Required (89 occupants) = 1**	**Provided = 2**
Other	**Required = 1 Service Sink**	**Provided = 1**

EGRESS PATH

FEC

FIRE EXTINGUISHER CABINET

#
#

COMBINED OCCUPANT LOAD AT A GIVEN EXIT DOOR.
THIS SUM EQUALS TOTAL OCCUPANT LOAD.
OCCUPANT LOAD CAPACITY OF DOOR OR STAIR
THE CAPACITY OF DOORS IS DETERMINED AS FOLLOWS:
CLEAR OPENING WIDTH IN INCHES DIVIDE BY 0.15.
THE CAPACITY OF STAIRS IS DETERMINED AS FOLLOWS:
WIDTH IN INCHES DIVIDE BY 0.20.

NORTH

0 4' 8' 16'
SCALE: 1/8"=1'-0"

I hereby certify that this plan specification, or report was prepared by me or under my direct supervision, and that I am a duly Registered Architect under the laws of the State of North Dakota.

Andrew John Haynes

Date 05/09/2022 Lic..No. 2359

C:\REVIT_2020_PROJECT_FILES\293320.00 LONG LAKE HQ_A_9922.rvt

LONG LAKE NWR

BUILDING CODE & LIFE SAFETY ANALYSIS

NEW HEADQUARTERS AND VISITOR CENTER

SUB-SHEET A-001

DESIGNED	DRAWN	CHECKED	DATE	DRAWING NO.	SHEET
CH	CH	AJH	2022.05.09		16 OF 66

WALL TYPE SCHEDULE

TYPE MARK	WIDTH	DESCRIPTION	COMMENTS
A	5 1/4"	2x4 WOOD FRAMING WITH SOUND BATTS, RC-1 CHANNEL ON ONE SIDE AT 24" OC, 5/8" GYP EACH SIDE	
B	6 3/4"	2x6 WOOD FRAMING WITH SOUND BATTS. 5/8" GYP EACH SIDE	
C	5 1/4"	5/8" GYP, 2x4 WOOD FRAMING, SOUND BATTS, 1/2" PLYWOOD SHEATHING, 5/8" GYP	1
D	7"	(2) LAYERS 5/8" TYPE X GYP, METAL LATH, 3/4" PLYWOOD SHEATHING, 2x4 WOOD FRAMING, SOUND BATTS, 3/4" PLYWOOD SHEATHING, 5/8" GYP	
E	4 3/4"	TILE UP TO 3'-4" A.F.F. AND 5/8" GYP ABOVE, 2x4 WOOD FRAMING, SOUND BATTS, 5/8" GYP	2
F	6 3/4"	TILE UP TO 3'-4" A.F.F. AND 5/8" GYP ABOVE, 2x6 WOOD FRAMING, SOUND BATTS, 5/8" GYP	2
G	4 3/4"	2x4 WOOD FRAMING WITH 5/8" GYP EACH SIDE	
H	7 1/4"	2x6 WOOD FRAMING WITH SOUND BATTS. 1/2" OSB ON PUBLIC SIDE, 5/8" GYP EACH SIDE	
J	4 1/8"	TILE UP TO 3'-4" A.F.F. AND 5/8" GYP ABOVE, 2x4 WOOD FRAMING, SOUND BATTS, 5/8" GYP	

NOTES:
1. INSTALL PLYWOOD ON THE INTERIOR SIDE OF ROOM
2. INTALL 5/8" CEMENT BOARD BACKING BEHIND TILE

GENERAL NOTES:

1. COORDINATE BUILDING PLAN WITH SITE PLAN.
2. EXTERIOR WALL CONSTRUCTION ABOVE GRADE.
   A. FIBER CEMENT BOARD SIDING, WEATHER BARRIER, 8" SIPS PANELS, 5/8" TYPE "X" GYP BOARD AT INTERIOR.
3. WALLS ARE FULL HEIGHT TO UNDERSIDE OF STRUCTURE UNLESS NOTED OTHERWISE. ALLOW FOR DEFLECTION.
4. DIMENSIONS ARE TO FACE OF STUDS OR SIPS PANELS UNLESS NOTED OTHERWISE.
5. INTERIOR PARTITIONS ARE TYPE B UNLESS NOTED OTHERWISE.
6. WALL PENETRATIONS:
   A. ALLOW FOR EXPANSION WHEN REQUIRED OR AS INDICATED BY OTHER DISCIPLINES.
7. DOOR RETURN - 4" ON HINGE SIDE, UNLESS NOTED OTHERWISE.
8. FLOOR DRAINS: NOT ALL FLOOR DRAINS ARE SHOWN ON ARCHITECTURAL PLANS. SEE PLUMBING DRAWINGS FOR LOCATION AND TYPE OF ALL FLOOR DRAINS.
9. PROVIDE BLOCKING IN PARTITION WALLS AS FOLLOWS:
   A. WOOD BLOCKING AND METAL REINFORCEMENT INSTALLED DURING CONSTRUCTION TO SUPPORT ALL WALL HUNG ITEMS AND FIXTURES.
   B. LOCKERS - PROVIDE ADDITIONAL BLOCKING IN WALLS FOR ATTACHMENT.
10. SIDEWALK, DOOR PADS AND STEPS, PAVEMENT GRADES AND ELEVATIONS TO BE COORDINATED WITH CIVIL DRAWINGS.
11. SEE CIVIL DRAWINGS FOR DOWNSPOUT (DS) EXTENSION AND SPLASH BLOCK LOCATION.

ROOM SCHEDULE

NUMBER	NAME	AREA
100	MECH/ELEC	226 SF
101	CONFERENCE/BREAK	561 SF
102	STORAGE	140 SF
103	RESTROOM	58 SF
104	RESTROOM	57 SF
105	HALL	78 SF
106	VESTIBULE	113 SF
107	VISITOR CONTACT	432 SF
108	WORK ROOM	136 SF
109	ADMIN	99 SF
111	OFFICE	175 SF
112	OPEN OFFICE	1125 SF
113	OFFICE	106 SF
114	OFFICE	106 SF
115	OFFICE	106 SF
116	OFFICE	108 SF
117	STORAGE	165 SF
118	LOCKER	136 SF
119	HALL	92 SF
120	IT	37 SF
121	SECURE STORAGE	31 SF
122	FILES	76 SF
123	RESTROOM	56 SF
124	JAN. CLOSET	36 SF

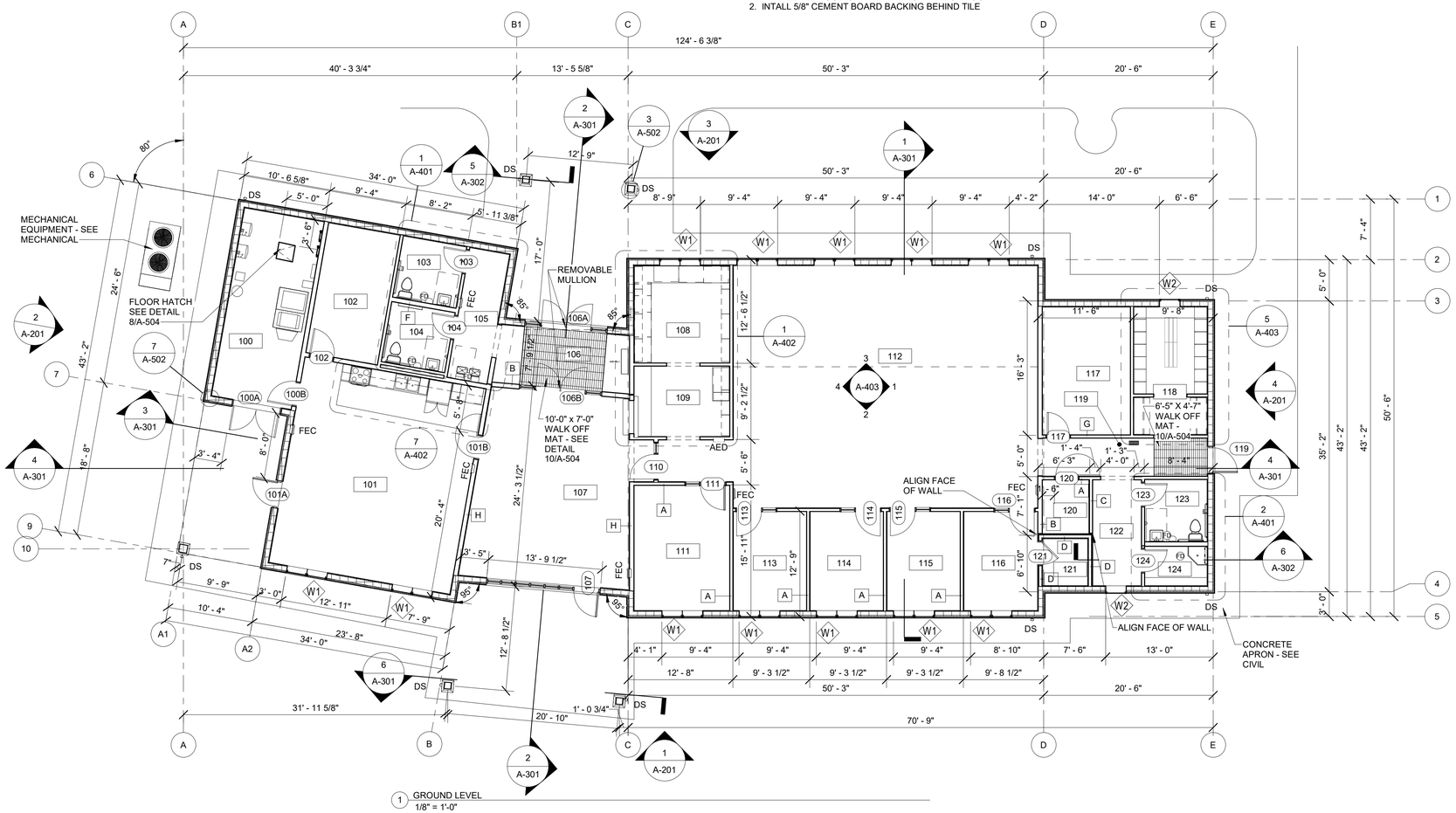

NORTH

SCALE: 1/8"=1'-0"

I hereby certify that this plan specification, or report was prepared by me or under my direct supervision, and that I am a duly Registered Architect under the laws of the State of North Dakota.

Andrew John Haynes

Date 05/09/2022 Lic. No. 2359

C:\REVIT_2020_PROJECT_FILES\29320.00 LONG LAKE HQ_A_9922.rvt

LONG LAKE NWR **GROUND FLOOR PLAN** NEW HEADQUARTERS AND VISITOR CENTER					SUB-SHEET A-101
DESIGNED CH	DRAWN CH	CHECKED AJH	DATE 2022.05.09	DRAWING NO.	SHEET 17 OF 66

RCP GENERAL NOTES:

1. CONTRACTOR TO FIELD VERIFY DIMENSIONS AND VERTICAL CONTROL POINTS PRIOR TO INSTALL ATION OF CEILING SYSTEM.
2. CONTRACTOR SHALL PROMPTLY NOTIFY OWNER'S REPRESENTATIVE OF DISCREPANCIES IN WORK WHICH WILL AFFECT INSTALLATION OF CEILINGS AS SHOWN ON DRAWINGS.
3. GYP BOARD CEILING INDICATED AT 8'-0" A.F.F. SHALL BE INSTALLED OVER NON-STRUCTURAL METAL FRAMING. ALL OTHER GYP BOARD CEILINGS SHALL BE FASTENED TO BOTTOM CHORD OF ROOF TRUSSES, UNLESS NOTED OTHERWISE.
4. COORDINATE MECHANICAL, ELECTRICAL, AND FIRE PROTECTION SYSTEM INSTALLATION WITH RESPECTIVE DISCIPLINE DRAWINGS AND SPECIFICATIONS.
5. CEILINGS SHALL BE 8'-0" A.F.F. UNLESS NOTED OTHERWISE.
6. REFERENCE SPECIFICATIONS AND ROOM FINISH SCHEDULE FOR CEILING TYPES AND FINISHES.
7. CONTRACTOR IS RESPONSIBLE FOR COORDINATION OF ABOVE CEILING WORK TO ENSURE CLEARANCES FOR SCHEDULED CEILING HEIGHTS.

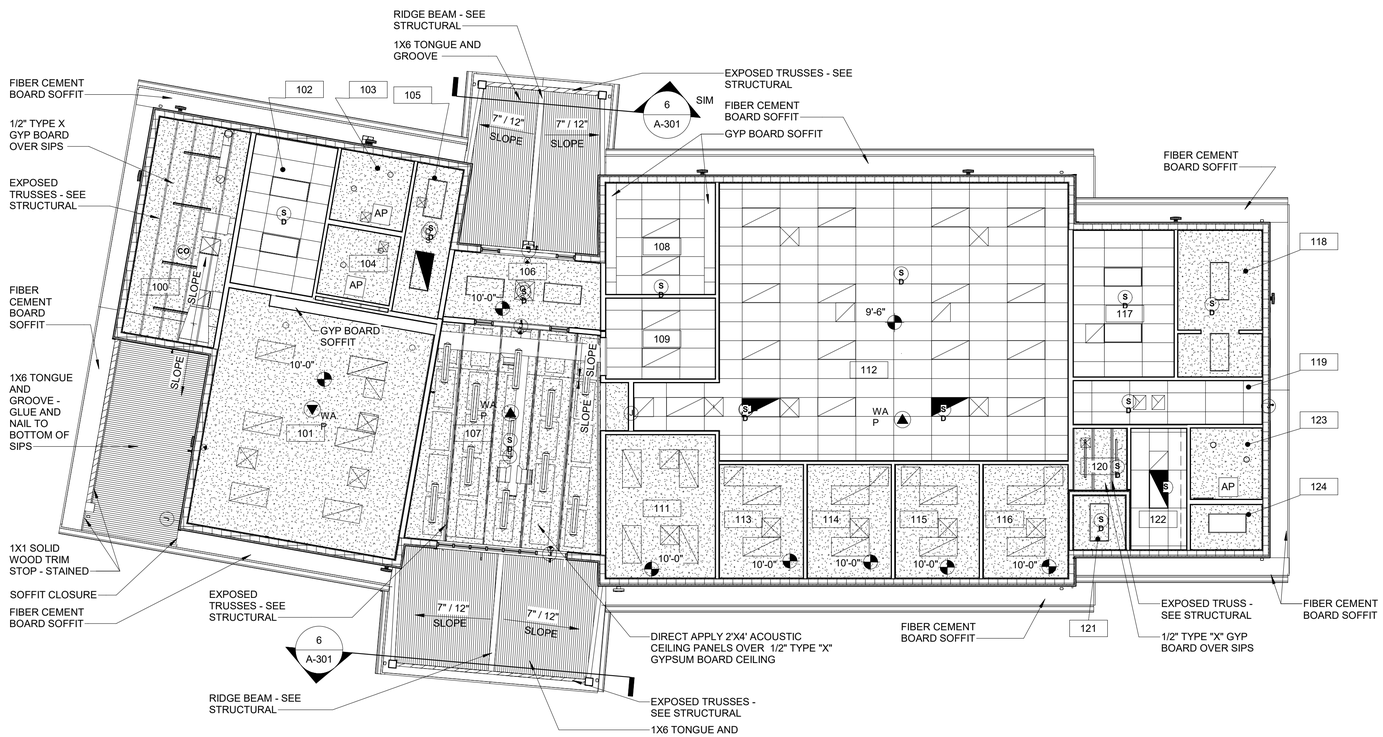

1 REFLECTED CEILING PLAN
1/8" = 1'-0"

RCP LEGEND

- GYP BOARD
- ACT
- X'-X" CEILING HEIGHT
- CEILING SLOPE AS NOTED
- AP ACCESS PANEL
- EXIT
- S SMOKE DETECTOR
- AP 24"x24" AP (ACCESS PANEL)
- CAN LIGHT
- WA WIRELESS ACCESS
- PENDANT LIGHTING
- PENDANT LIGHTING
- FIXED LIGHTING
- SUPPLY AIR
- RETURN AIR
- WALL MOUTED LIGHT
- 2'X4' LIGHT FIXTURE
- 2'X4' LIGHT FIXTURE

ROOM SCHEDULE

NUMBER	NAME	AREA
100	MECH/ELEC	226 SF
101	CONFERENCE/BREAK	561 SF
102	STORAGE	140 SF
103	RESTROOM	58 SF
104	RESTROOM	57 SF
105	HALL	78 SF
106	VESTIBULE	113 SF
107	VISITOR CONTACT	432 SF
108	WORK ROOM	136 SF
109	ADMIN	99 SF
111	OFFICE	175 SF
112	OPEN OFFICE	1125 SF
113	OFFICE	106 SF
114	OFFICE	106 SF
115	OFFICE	106 SF
116	OFFICE	108 SF
117	STORAGE	165 SF
118	LOCKER	136 SF
119	HALL	92 SF
120	IT	37 SF
121	SECURE STORAGE	31 SF
122	FILES	76 SF
123	RESTROOM	58 SF
124	JAN. CLOSET	36 SF

I hereby certify that this plan specification, or report was prepared by me or under my direct supervision, and that I am a duly Registered Architect under the laws of the State of North Dakota.

Andrew John Haynes

Date 05/09/2022 Lic..No. 2359

NORTH

0 4' 8' 16'
SCALE: 1/8"=1'-0"

C:\REVIT_2020_PROJECT_FILES\29320.00 LONG LAKE HQ_A_9922.rvt

LONG LAKE NWR

REFLECTED CEILING PLAN

NEW HEADQUARTERS AND VISITOR CENTER

DESIGNED	DRAWN	CHECKED	DATE	DRAWING NO.	SHEET
CH	CH	AJH	2022.05.09		18 OF 66

SUB-SHEET A-121

ROOF PLAN NOTES:

1. COORDINATE LOCATIONS AND SIZE OF CURBS AND PENETRATIONS WITH STRUCTURAL ROOF FRAMING PLAN AND DISCIPLINE DRAWINGS.
2. PIPE PENETRATIONS SMALLER THAN 6" MAY NOT BE SHOWN. COORDINATE WITH DISCIPLINE DRAWINGS.
3. MISCELLANEOUS ROOF PENETRATIONS NOT SPECIFICALLY SHOWN ON THIS DRAWING SHALL BE FLASHED AND SEALED ACCORDING TO DETAILS SHOWN, AND PER ROOFING MANUFACTURER'S RECOMMENDED GUIDE DETAILS.

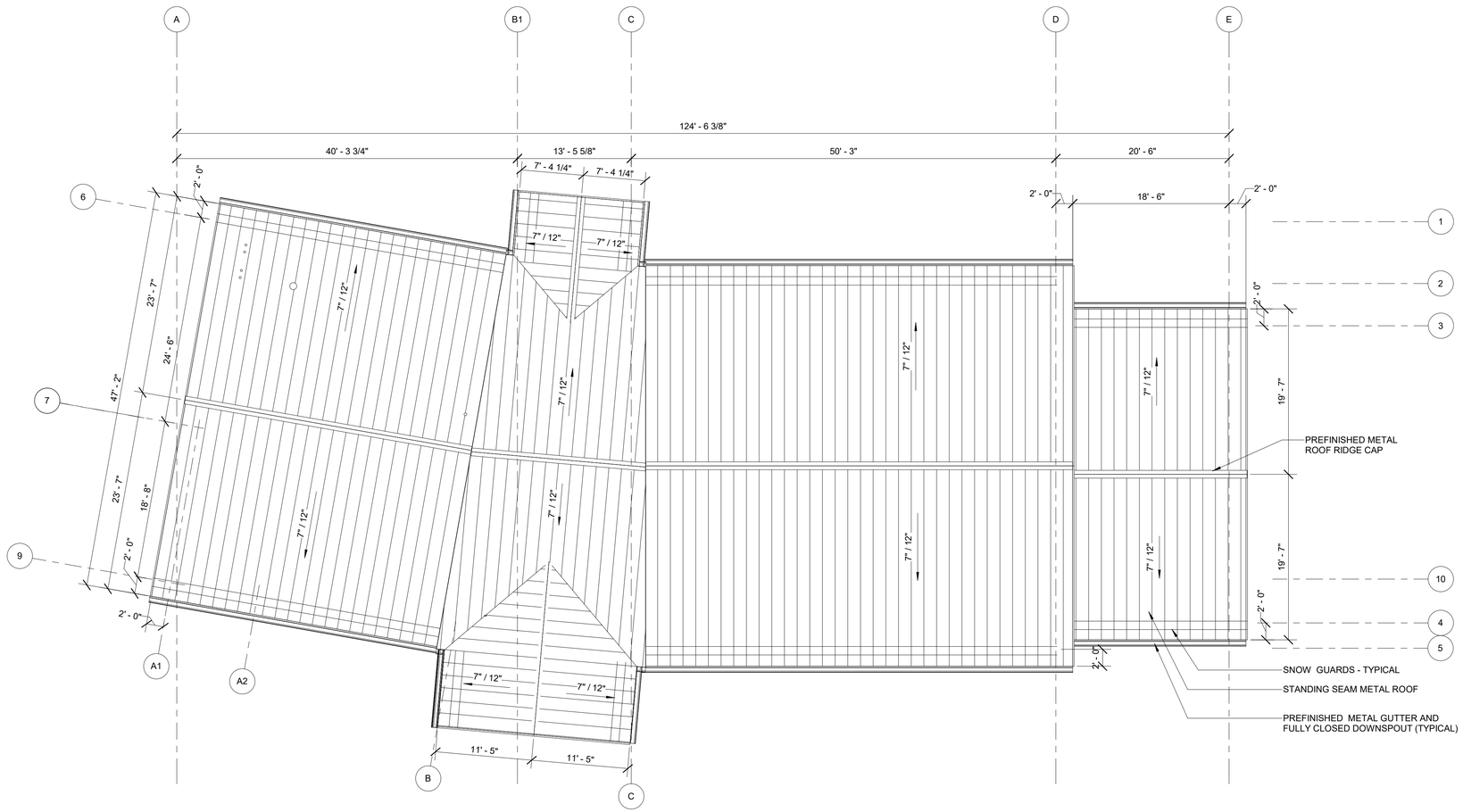

1 ROOF PLAN
1/8" = 1'-0"

NORTH

0 4' 8' 16'
SCALE: 1/8"=1'-0"

I hereby certify that this plan specification, or report was prepared by me or under my direct supervision, and that I am a duly Registered Architect under the laws of the State of North Dakota.

Andrew John Haynes

Date 05/09/2022 Lic..No. 2359

C:\REVIT_2020_PROJECT_FILES\29320.00 LONG LAKE HQ_A_9922.rvt

LONG LAKE NWR **ROOF PLAN** NEW HEADQUARTERS AND VISITOR CENTER					SUB-SHEET A-151
DESIGNED CH	DRAWN CH	CHECKED AJH	DATE 2022.05.09	DRAWING NO.	SHEET 19 OF 66

GENERAL NOTES:

1. EXPOSED WOOD TRUSSES AND WOOD COLUMNS TO BE STAINED IN THE SAME COLOR.

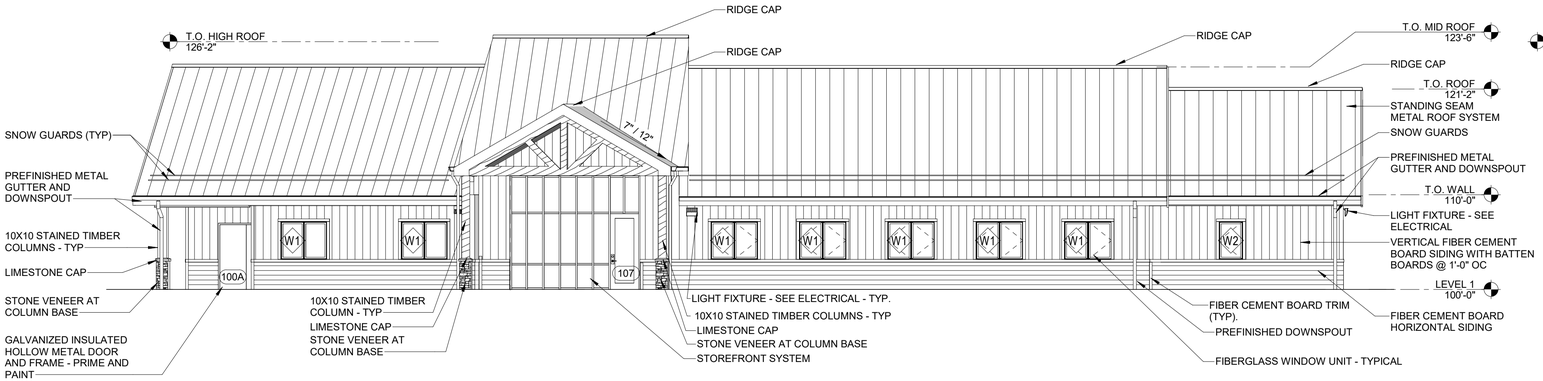

1 SOUTH ELEVATION
1/8" = 1'-0"

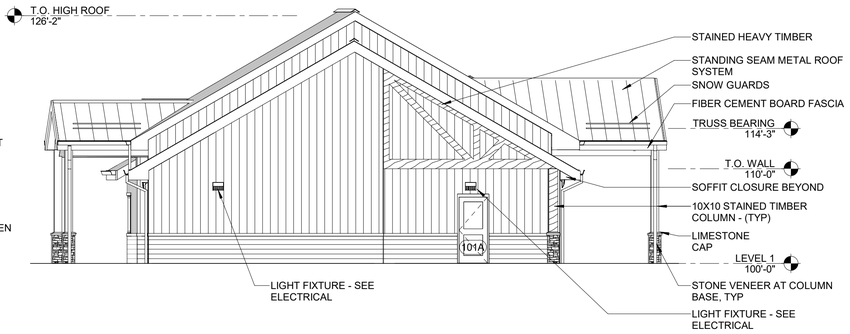

2 WEST ELEVATION
1/8" = 1'-0"

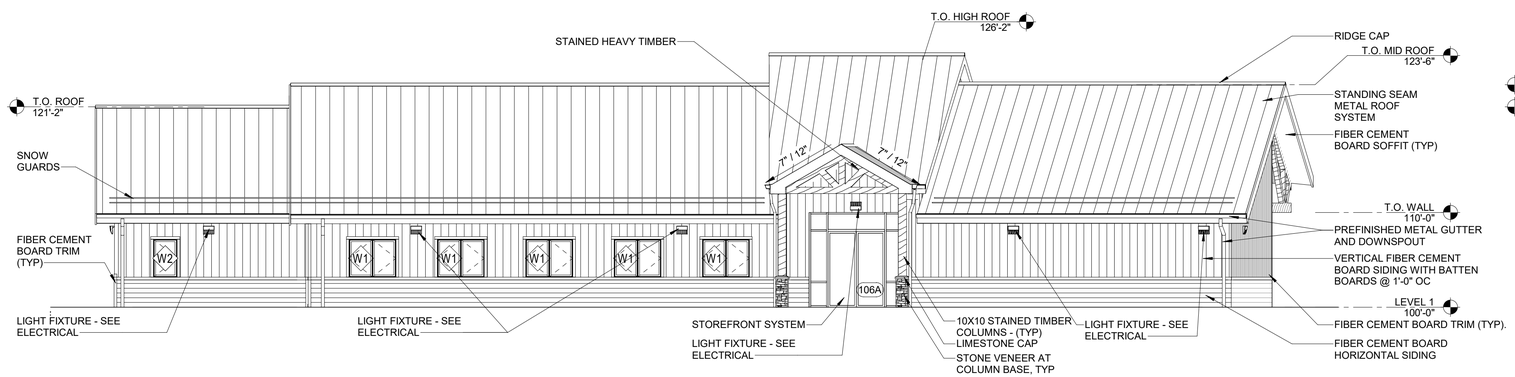

3 NORTH ELEVATION
1/8" = 1'-0"

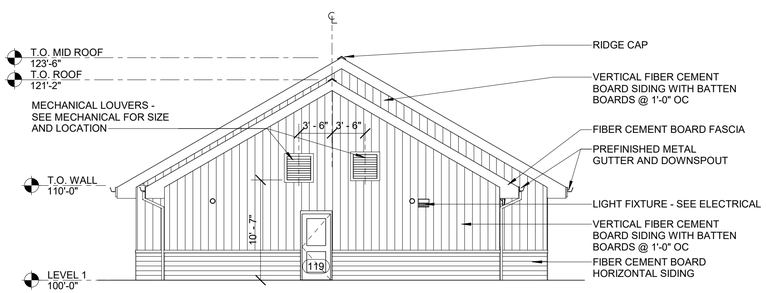

4 EAST ELEVATION
1/8" = 1'-0"

0 4' 8' 16'
SCALE: 1/8"=1'-0"

I hereby certify that this plan specification, or report was prepared by me or under my direct supervision, and that I am a duly Registered Architect under the laws of the State of North Dakota.

Andrew John Haynes

Date 05/09/2022 Lic..No. 2359

C:\REVIT_2020_PROJECT_FILES\29320.00 LONG LAKE HQ_A_9922.rvt

LONG LAKE NWR					SUB-SHEET
EXTERIOR ELEVATIONS					A-201
NEW HEADQUARTERS AND VISITOR CENTER					
DESIGNED	DRAWN	CHECKED	DATE	DRAWING NO.	SHEET
CH	CH	AJH	2022.05.09		20 OF 66

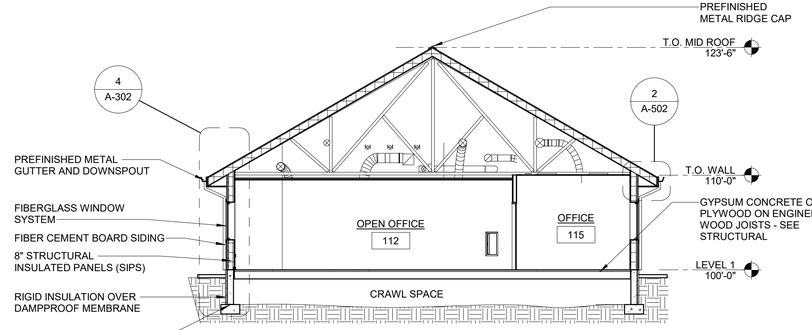

1 SECTION AT OFFICES
1/8" = 1'-0"

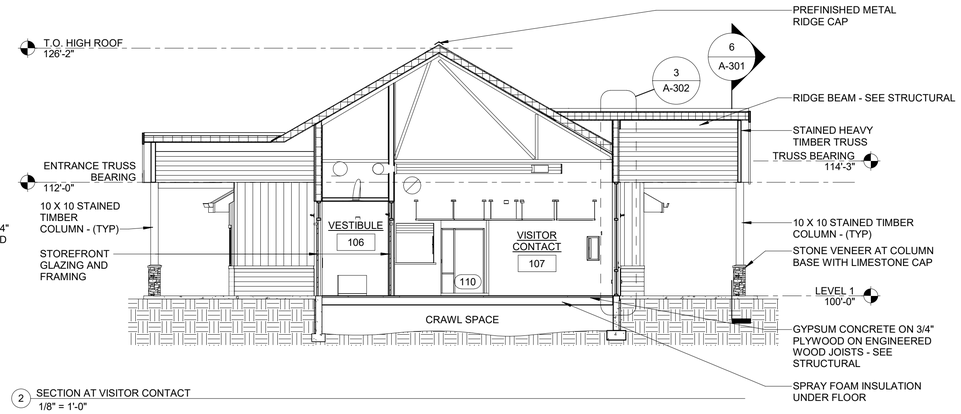

2 SECTION AT VISITOR CONTACT
1/8" = 1'-0"

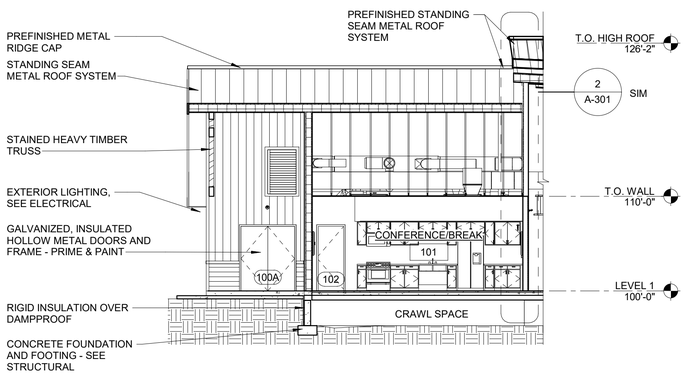

3 SECTION AT CONFERENCE/BREAK
1/8" = 1'-0"

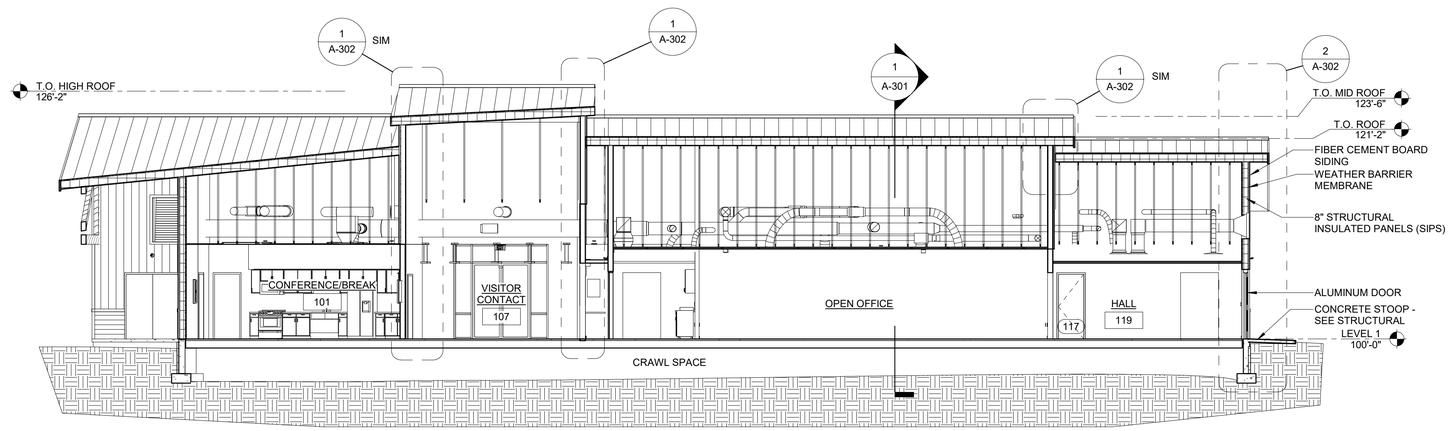

4 W-E SECTION
1/8" = 1'-0"

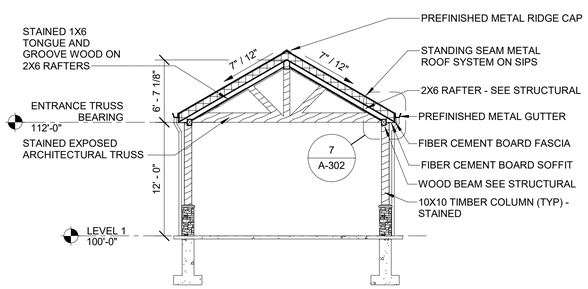

6 SECTION THRU SOUTH ENTRANCE
1/8" = 1'-0"

0 4' 8' 16'
SCALE: 1/8"=1'-0"

I hereby certify that this plan specification, or report was prepared by me or under my direct supervision, and that I am a duly Registered Architect under the laws of the State of North Dakota.
Andrew John Haynes
Date 05/09/2022 Lic..No. 2359

C:\REVIT_2020_PROJECT_FILES\29320.00 LONG LAKE HQ_A_9922.rvt

LONG LAKE NWR **BUILDING SECTIONS** NEW HEADQUARTERS AND VISITOR CENTER					SUB-SHEET A-301
DESIGNED CH	DRAWN CH	CHECKED AJH	DATE 2022.05.09	DRAWING NO.	SHEET 21 OF 66

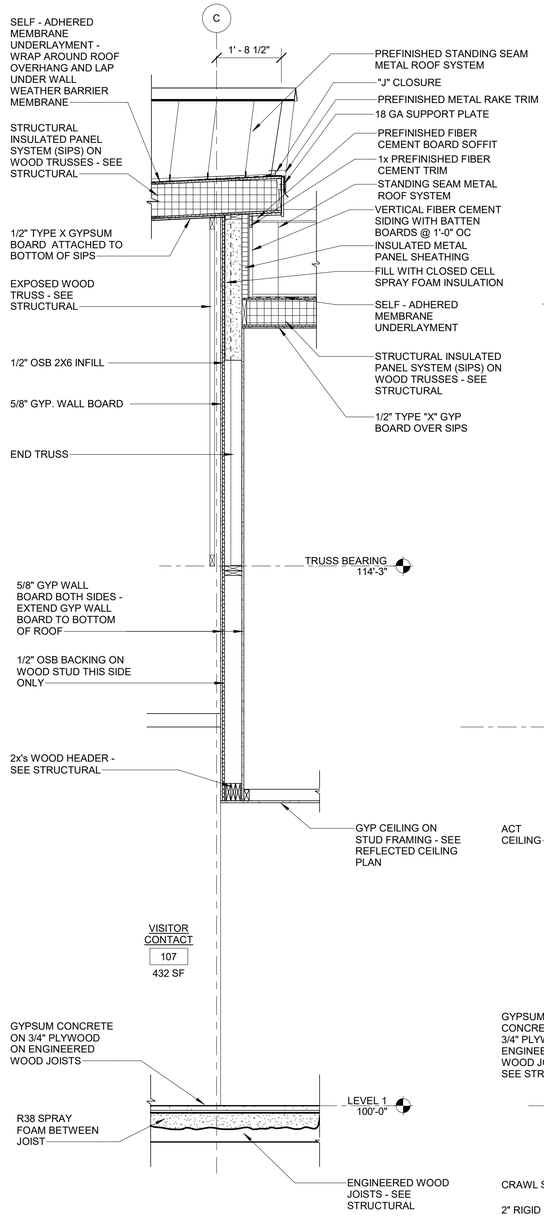

1 WALL SECTION
1/2" = 1'-0"

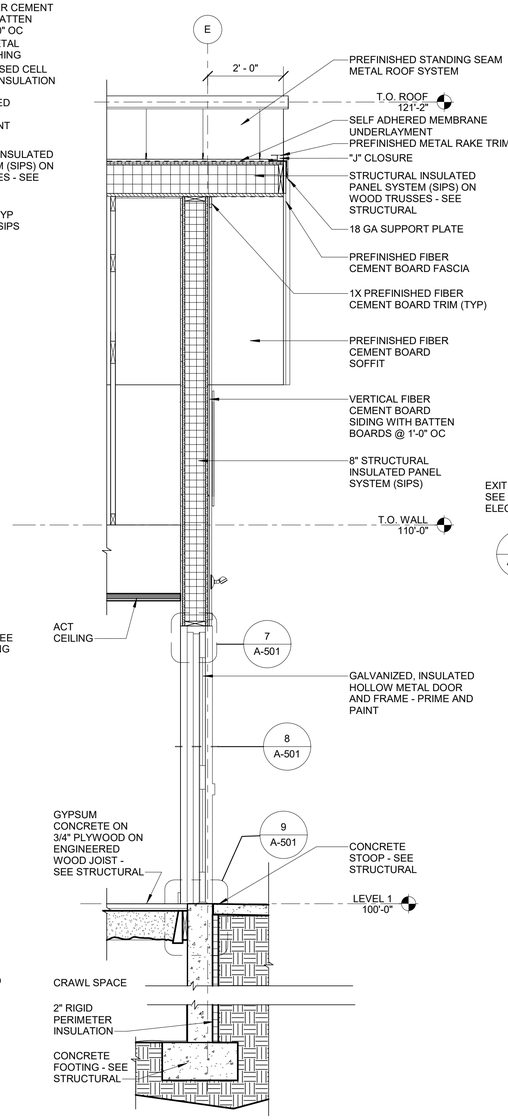

2 WALL SECTION - EAST
1/2" = 1'-0"

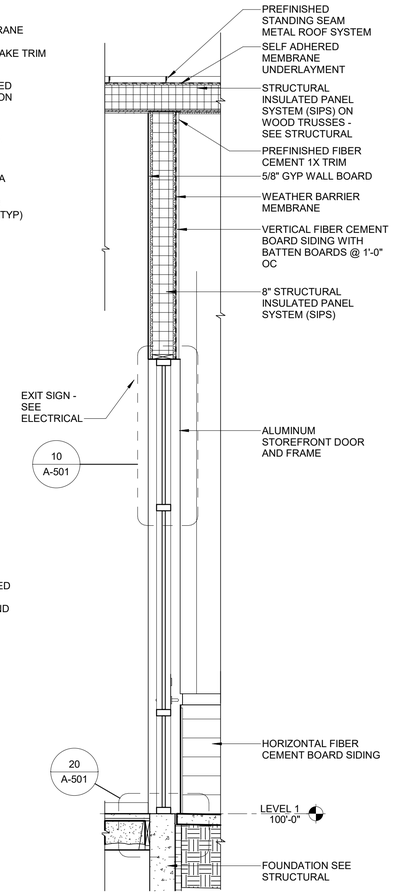

3 WALL SECTION THRU STOREFRONT
1/2" = 1'-0"

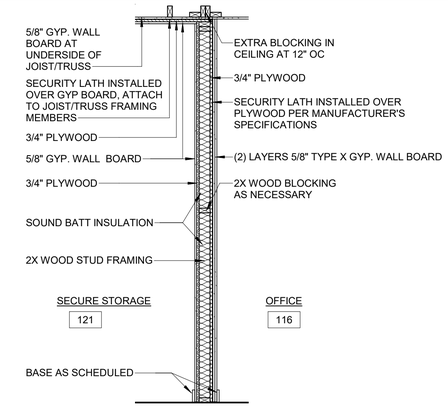

NOTES:
1. WALLS ARE TO EXTEND AND SOLIDLY ATTACH TO THE STRUCTURE ABOVE
2. SECURITY LATH IS TO WRAP CONTINUOUSLY FROM THE WALLS UP AND OVER THE CEILING
3. ATTACH BLOCKING AND PLYWOOD WITH SCREWS AT 8" OC TO REINFORCE CONNECTIONS
4. PROVIDE AN EXHAUST FAN
5. PROVIDE A SECURE DOOR LOUVER WITHIN THE STEEL DOOR

6 WALL SECTION AT SECURITY ROOM
1/2" = 1'-0"

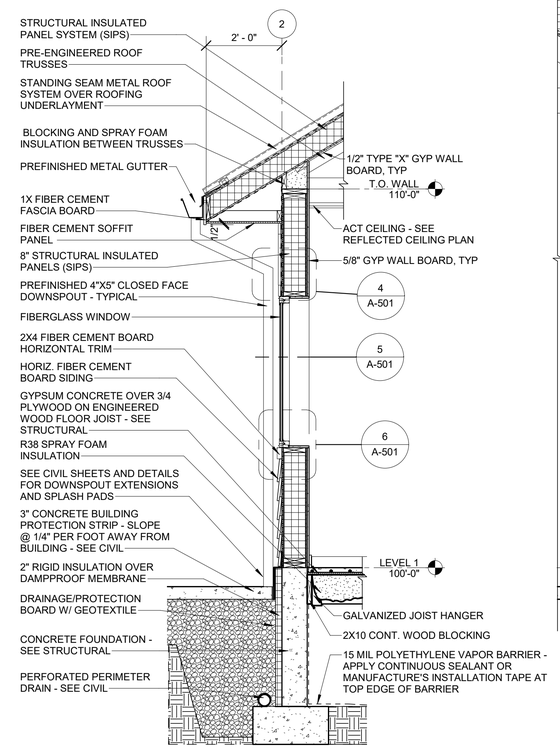

4 WALL SECTION AT OFFICES
1/2" = 1'-0"

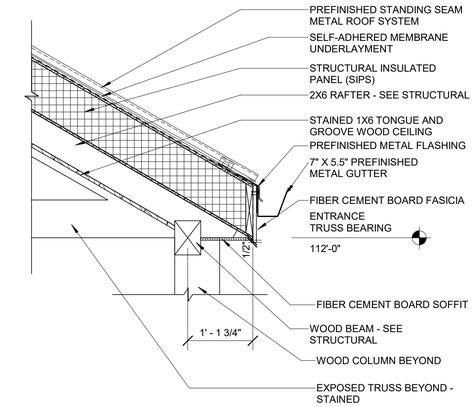

5 SECTION AT EXTERIOR COLUMN
1/2" = 1'-0"

7 EAVE DETAIL AT ENTRANCE
3/4" = 1'-0"

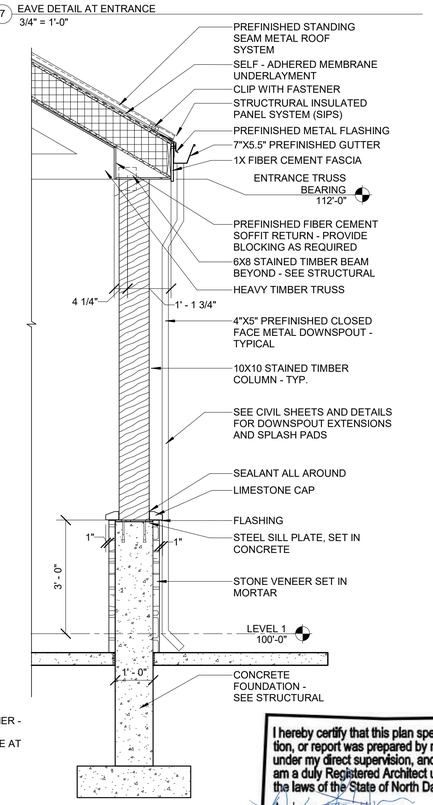

I hereby certify that this plan specification, or report was prepared by me or under my direct supervision, and that I am a duly Registered Architect under the laws of the State of North Dakota.

Andrew John Haynes

Date 05/09/2022 Lic..No. 2359

SCALE: 1/2"=1'-0"

C:\REVIT_2020_PROJECT_FILES\29320.00 LONG LAKE HQ_A_9922.rvt

LONG LAKE NWR **WALL SECTIONS** NEW HEADQUARTERS AND VISITOR CENTER					SUB-SHEET A-302
DESIGNED CH	DRAWN CH	CHECKED AJH	DATE 2022.05.09	DRAWING NO.	SHEET 22 OF 66

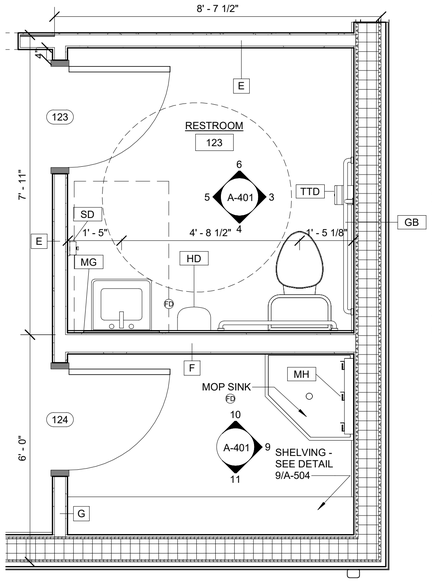

2 RESTROOM 123
1/2" = 1'-0"

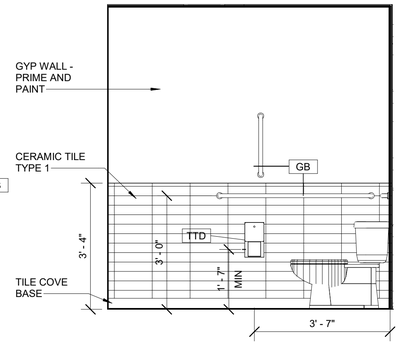

3 123 EAST ELEVATION
1/2" = 1'-0"

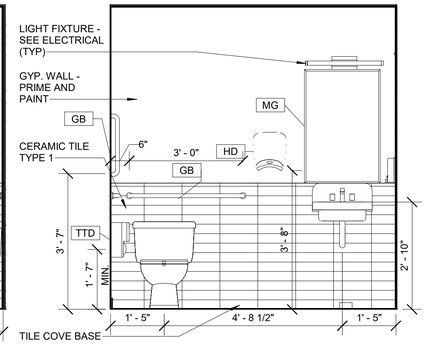

4 123 SOUTH ELEVATION
1/2" = 1'-0"

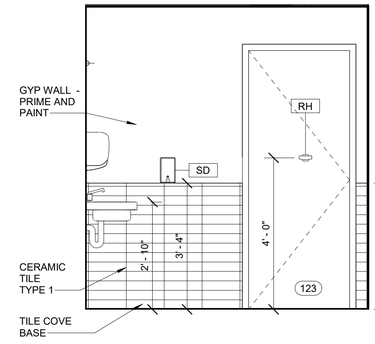

5 123 WEST ELEVATION
1/2" = 1'-0"

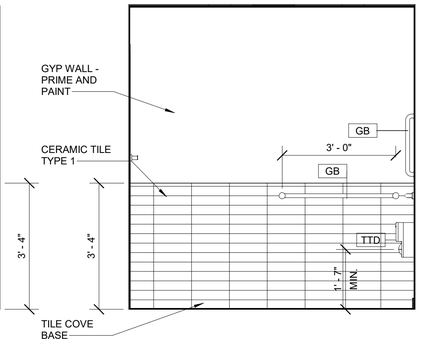

6 123 NORTH ELEVATION
1/2" = 1'-0"

ENLARGED PLAN NOTES:

1. WALLS ARE FULL HEIGHT TO UNDERSIDE OF STRUCTURE UNLESS NOTED OTHERWISE. ALLOW FOR DEFLECTION.
2. DIMENSIONS ARE TO FACE OF STUDS OR SIPS PANELS UNLESS NOTED OTHERWISE.
3. WALL PENETRATIONS:
   A. ALLOW FOR EXPANSION WHEN REQUIRED OR AS INDICATED BY OTHER DISCIPLINES.
4. SEE A101 FOR WALL TYPES.
5. DOOR RETURN - MINIMUM OF 4" ON HINGE SIDE.
6. FLOOR DRAINS: NOT ALL FLOOR DRAINS ARE SHOWN ON ARCHITECTURAL PLANS. SEE PLUMBING DRAWINGS FOR LOCATION AND TYPE OF FLOOR DRAINS.
7. PROVIDE BLOCKING IN PARTITION WALLS AS FOLLOWS:
   A. WOOD BLOCKING AND METAL REINFORCEMENT INSTALLED DURING CONSTRUCTION TO SUPPORT WALL HUNG ITEMS AND FIXTURES.
8. SEE SPECIFICATIONS FOR TOILET ACCESSORIES.

TOILET ACCESSORY LEGEND

MARK	DESCRIPTION
BCS	BABY CHANGING STATION
GB	36" HORIZONTAL GRAB BAR, 42" HORIZONTAL GRAB BAR, 18" VERTICAL GRAB BAR
HD	ELECTRIC HAND DRYER
MG	24" x 36" MIRROR
MH	MOP AND BROOM HOLDER
RH	SURFACE MOUNTED ROBE HOOK
SD	SOAP DISPENSER
TTD	TOILET TISSUE DISPENSER

FD MEANS FLOOR DRAIN

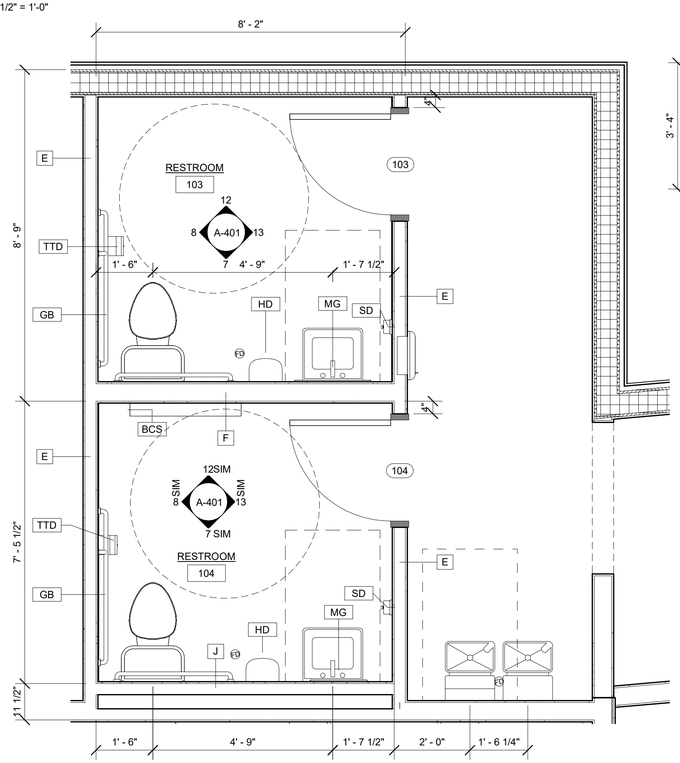

1 RESTROOMS 103 & 104
1/2" = 1'-0"

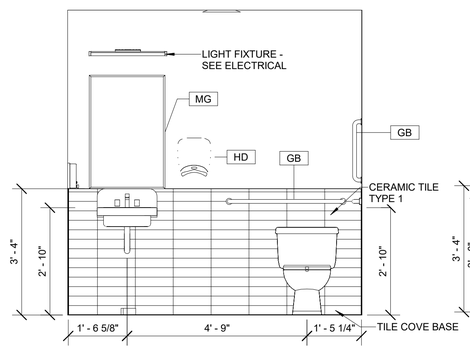

7 103-104 RESTROOM SOUTH ELEVATION
1/2" = 1'-0"

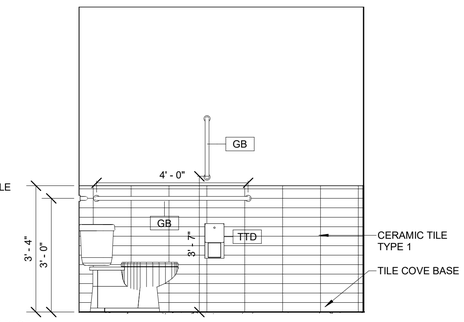

8 103-104 RESTROOM WEST ELEVATION
1/2" = 1'-0"

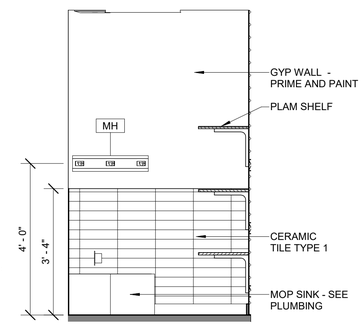

9 124 INTERIOR ELEVATION - EAST
1/2" = 1'-0"

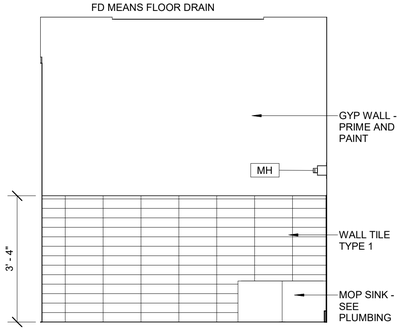

10 124 INTERIOR ELEVATION - NORTH
1/2" = 1'-0"

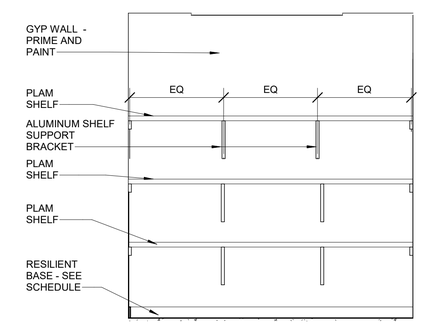

11 SHELVING ELEVATION
1/2" = 1'-0"

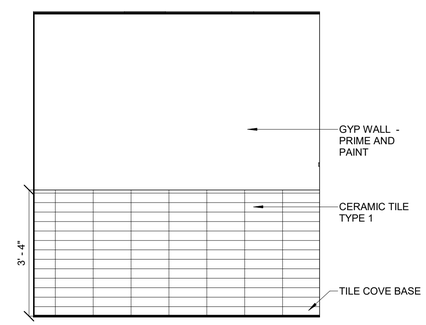

12 103-104 RESTROOM NORTH ELEVATION
1/2" = 1'-0"

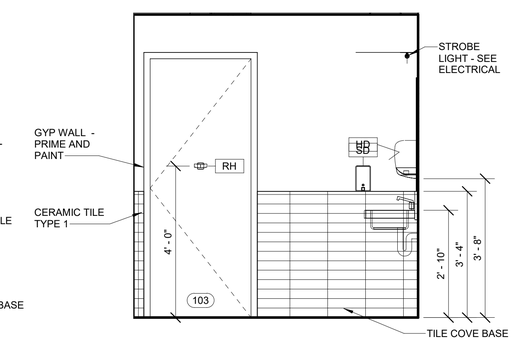

13 103-104 RESTROOM EAST ELEVATION
1/2" = 1'-0"

0 1' 2' 4'
SCALE: 1/2"=1'-0"

I hereby certify that this plan specification, or report was prepared by me or under my direct supervision, and that I am a duly Registered Architect under the laws of the State of North Dakota.

Andrew John Haynes

Date 05/09/2022 Lic..No. 2359

C:\REVIT_2020_PROJECT_FILES\29320.00 LONG LAKE HQ_A_9922.rvt

LONG LAKE NWR **ENLARGED PLANS & ELEVATIONS** NEW HEADQUARTERS AND VISITOR CENTER					SUB-SHEET A-401
DESIGNED CH	DRAWN CH	CHECKED AJH	DATE 2022.05.09	DRAWING NO.	SHEET 23 OF 66

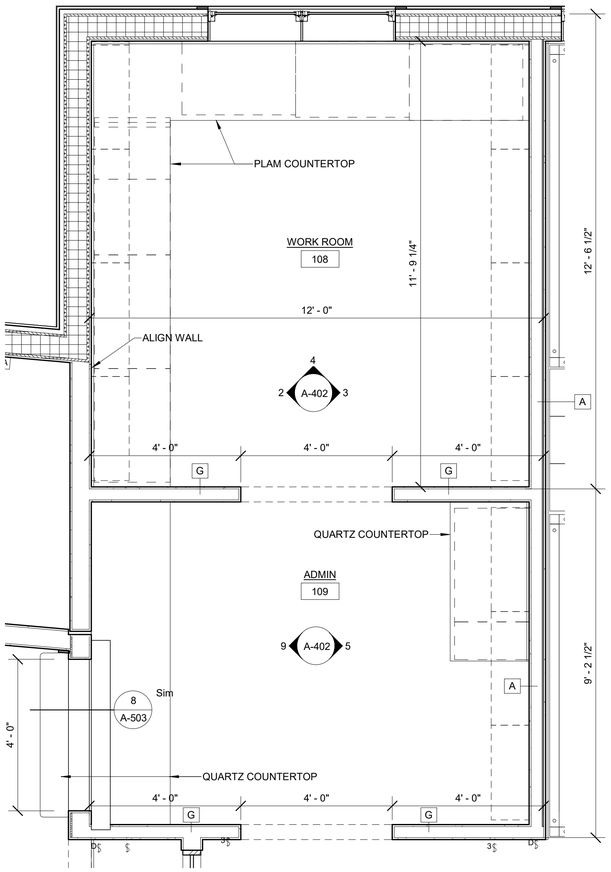

1 108 WORK ROOM & 109 ADMIN
1/2" = 1'-0"

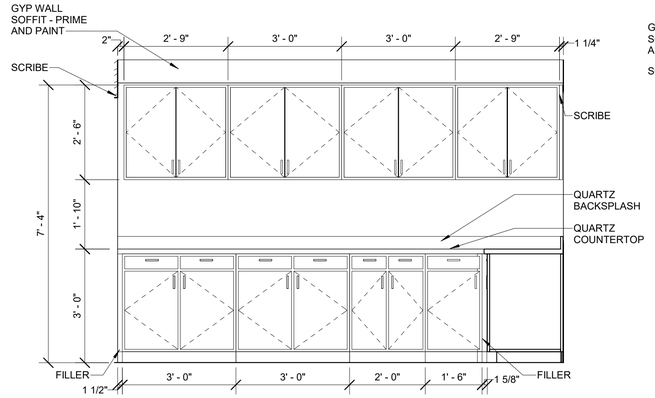

2 108 WORK ROOM - WEST
1/2" = 1'-0"

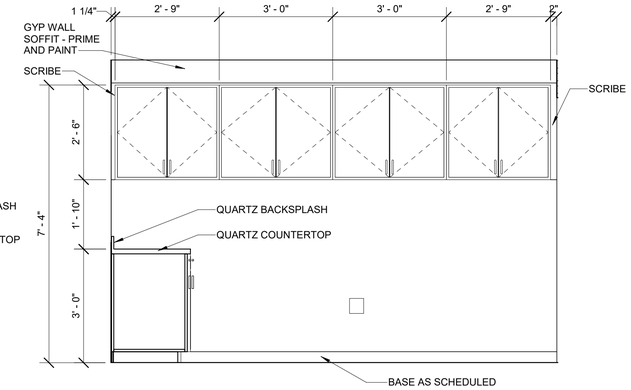

3 108 WORK ROOM - EAST
1/2" = 1'-0"

GENERAL NOTES:

1. SEE SHEET A-504 FOR CABINET DETAILS.
2. CABINETS TO BE STAINED WOOD UNLESS NOTED OTHERWISE (SPECIES - OAK).
3. CABINET INTERIORS TO BE WHITE UNLESS NOTED OTHERWISE.

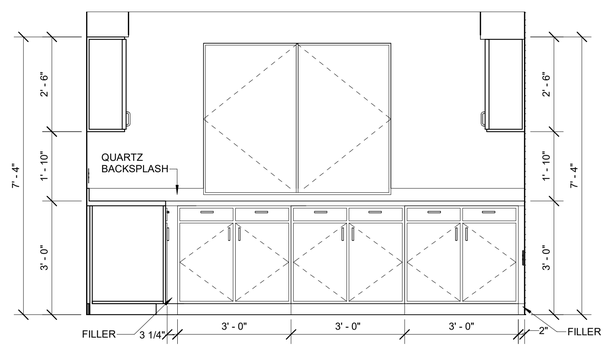

4 108 WORK ROOM - NORTH
1/2" = 1'-0"

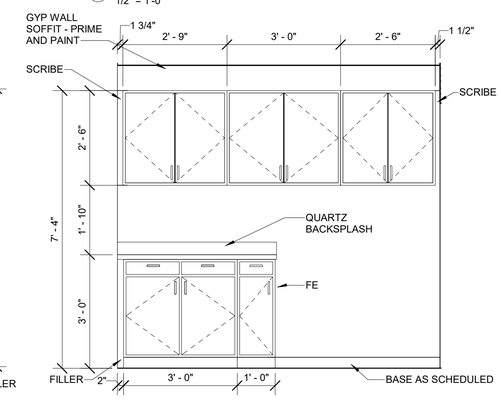

5 109 ADMIN - EAST
1/2" = 1'-0"

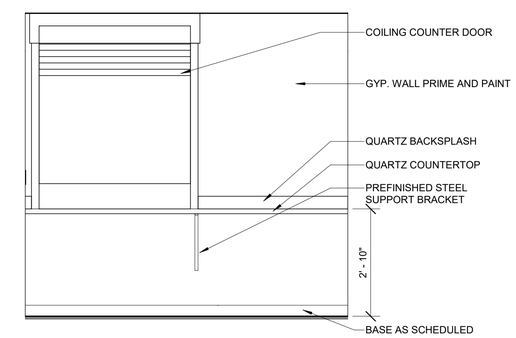

9 109 ADMIN INTERIOR ELEVATION - WEST
1/2" = 1'-0"

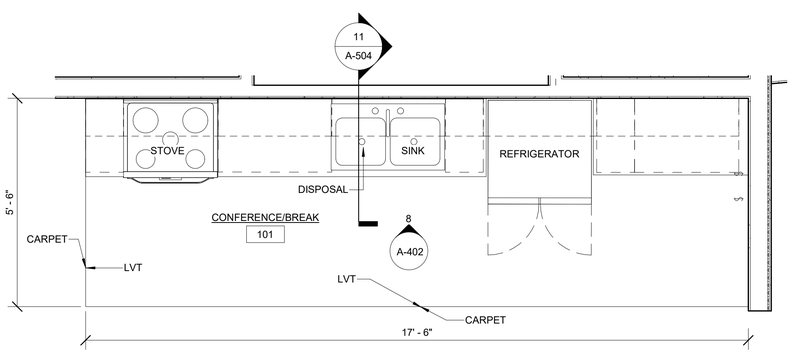

7 101 CONFERENCE/BREAK
1/2" = 1'-0"

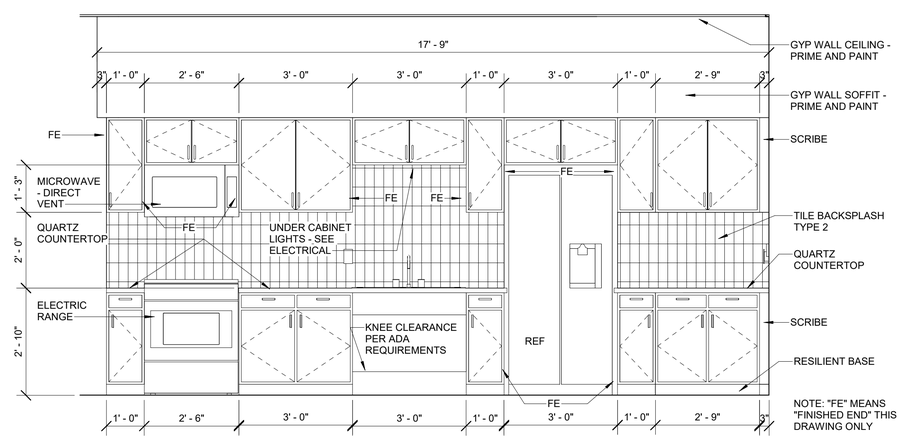

NOTE: "FE" MEANS
"FINISHED END" THIS
DRAWING ONLY

8 101 CONFERENCE/BREAK - NORTH
1/2" = 1'-0"

0 1' 2' 4'
SCALE: 1/2"=1'-0"

I hereby certify that this plan specification, or report was prepared by me or under my direct supervision, and that I am a duly Registered Architect under the laws of the State of North Dakota.

Andrew John Haynes

Date 05/09/2022 Lic..No. 2359

C:\REVIT_2020_PROJECT_FILES\29320.00 LONG LAKE HQ_A_9922.rvt

LONG LAKE NWR **ENLARGED PLANS & ELEVATIONS** NEW HEADQUARTERS AND VISITOR CENTER					SUB-SHEET A-402
DESIGNED CH	DRAWN CH	CHECKED AJH	DATE 2022.05.09	DRAWING NO.	SHEET 24 OF 66

1 112 EAST ELEVATION
1/4" = 1'-0"

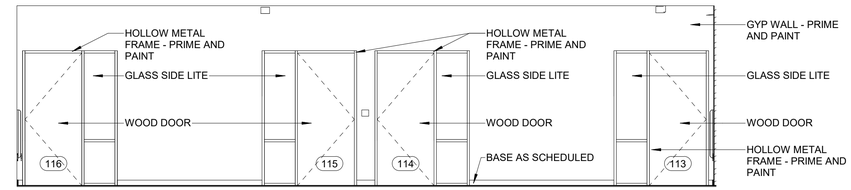

2 112 SOUTH ELEVATION
1/4" = 1'-0"

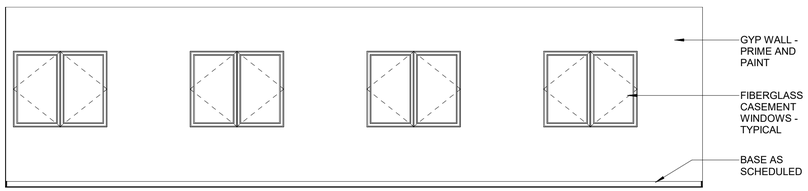

3 112 NORTH ELEVATION
1/4" = 1'-0"

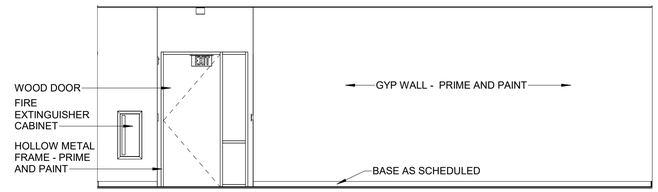

4 112 WEST ELEVATION
1/4" = 1'-0"

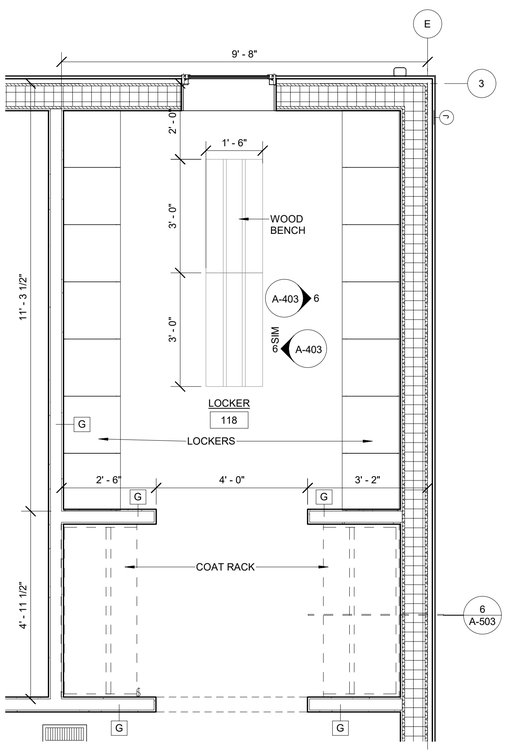

5 ENLARGED LOCKER ROOM PLAN
1/2" = 1'-0"

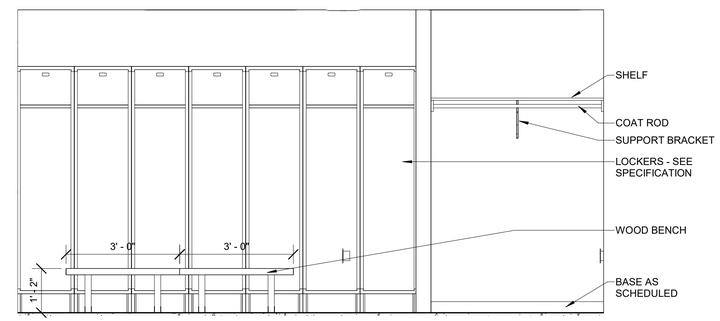

6 LOCKER - EAST ELEVATION
1/2" = 1'-0"

GENERAL NOTES:

1. SEE SHEET A-504 FOR CABINET DETAILS.
2. CABINETS TO BE STAINED WOOD UNLESS NOTED OTHERWISE (SPECIES - OAK).
3. CABINET INTERIORS TO BE WHITE UNLESS NOTED OTHERWISE.

0 1' 2' 4'
SCALE: 1/2"=1'-0"

0 2' 4' 8'
SCALE: 1/4"=1'-0"

I hereby certify that this plan specification, or report was prepared by me or under my direct supervision, and that I am a duly Registered Architect under the laws of the State of North Dakota.

Andrew John Haynes

Date 05/09/2022 Lic..No. 2359

C:\REVIT_2020_PROJECT_FILES\29320.00 LONG LAKE HQ_A_9922.rvt

LONG LAKE NWR

ENLARGED PLAN AND INTERIOR ELEVATIONS

NEW HEADQUARTERS AND VISITOR CENTER

SUB-SHEET
A-403

DESIGNED	DRAWN	CHECKED	DATE	DRAWING NO.	SHEET
CH	CH	AJH	2022.05.09		25 OF 66

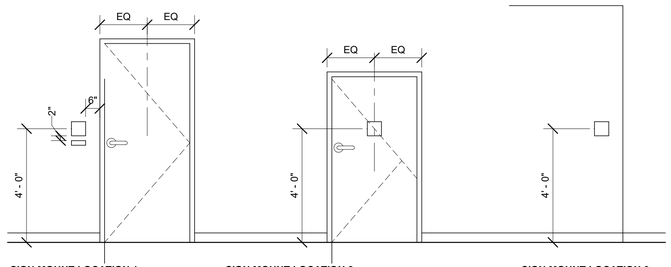

SIGN MOUNT LOCATION 1
SIGN LOCATION FOR ADA COMPLIANCE. MOUNT SIGN ON LATCH SIDE OF DOOR. CENTER SIGN HORIZONTALLY WITHIN THE 18" CLEARANCE FOR ADA. SIGN SHOULD BE MOUNTED SO BOTTOM OF LOWEST TACTILE CHARACTER IS 48" AFF MINIMUM.

SIGN MOUNT LOCATION 2
CENTER SIGN ON DOOR. FIELD ADJUSTMENTS MAY BE NEEDED TO ACCOMMODATE EXISTING OBSTANCLES. SIGNS SPECIFIED WITH THIS MOUNT SHOULD BE INSTALLED SO BOTTOM OF LOWEST TACTILE CHARACTER IS 48" AFF MINIMUM UNLESS OTHERWISE NOTED. ALSO USE THIS LOCATION WHEN SIGN MOUNT LOCATION 1 CANNOT BE ACHIEVED.

SIGN MOUNT LOCATION 3
CENTER SIGN HORIZONTALLY WITHIN THE 18" CLEARANCE FOR ADA. MOUNT SIGN SO BOTTOM OF LOWEST TACTILE CHARACTER IS 48" AFF MINIMUM.

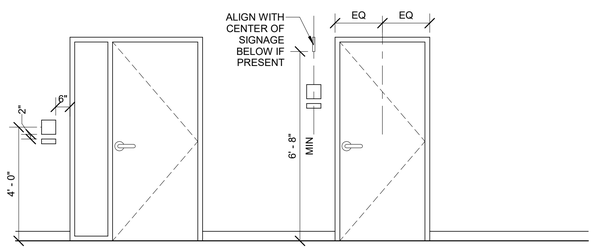

SIGN MOUNT LOCATION 4
SIGN LOCATION FOR ADA COMPLIANCE WHERE RELITE OCCURS. CENTER SIGN HORIZONTALLY WITHIN THE 18" CLEARANCE FOR ADA ADJACENT TO THE RELITE. SIGN SHOULD BE MOUNTED SO BOTTOME OF LOWEST TACTILE CHARACTER IS 48" AFF MINIMUM

SIGN MOUNT LOCATION 5
SIGN LOCATION FOR ADA COMPLIANCE WITH WALL MOUNT FLAG SIGN OCCURS. MOUNT SIGN ON LATCH SIDE OF DOOR. CENTER SIGN HORIZONTALLY ABOVE IDENTITY SIGNAGE BELOW IF PRESENT. IF NO OTHER SIGNAGE IS PRESENT OR SIGN IS NOT LOCATED ADJACENT TO DOOR LOCATE 6" FROM DOOR JAMB OR WALL EDGE. SIGN SHOULD BE MOUNTED SO THAT BOTTOM OF SIGN IS 80" AFF MINIMUM.

1 SIGNAGE MOUNTING HEIGHTS, TYPICAL
3/8" = 1'-0"

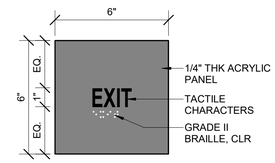

MOUNT AT ALL EXITS IN SIGN MOUNT LOCATION 1 OR 4

2 TYPE A1
3" = 1'-0"

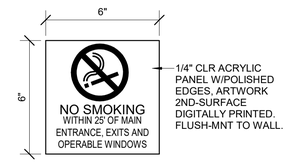

MOUNT AT ALL EXTERIOR DOORS IN SIGN MOUNT LOCATION 1 OR 4

3 TYPE A2
3" = 1'-0"

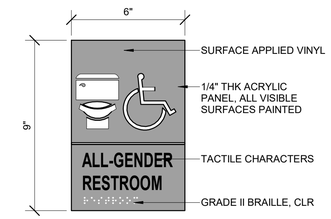

MOUNT AT ALL RESTROOMS IN SIGN MOUNT LOCATION 1

4 TYPE A3
3" = 1'-0"

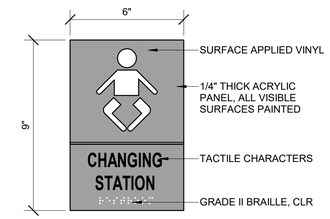

MOUNT AT RESTROOM 104 IN SIGN MOUNT LOCATION 1, ADJACENT TO ALL-GENDER RESTROOM SIGN

5 CHANGING STATION
3" = 1'-0"

0 2' 4' 6'
SCALE: 3/8"=1'-0"

0 1' 2' 4'
SCALE: 1/2"=1'-0"

I hereby certify that this plan specification, or report was prepared by me or under my direct supervision, and that I am a duly Registered Architect under the laws of the State of North Dakota.

Andrew John Haynes

Date 05/09/2022 Lic..No. 2359

C:\REVIT_2020_PROJECT_FILES\29320.00 LONG LAKE HQ_A_9922.rvt

LONG LAKE NWR **SIGNAGE DETAILS** NEW HEADQUARTERS AND VISITOR CENTER					SUB-SHEET A-410
DESIGNED CH	DRAWN CH	CHECKED AJH	DATE 2022.05.09	DRAWING NO.	SHEET 26 OF 66

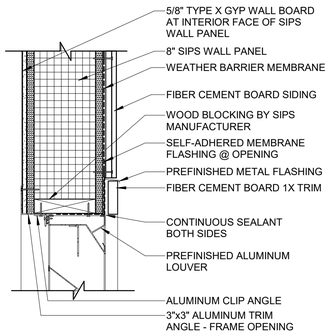

1 LOUVER HEAD
1 1/2" = 1'-0"

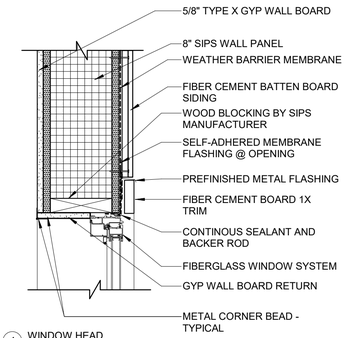

4 WINDOW HEAD
1 1/2" = 1'-0"

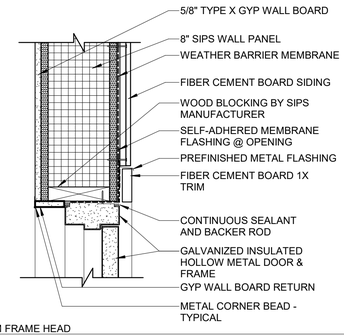

7 EXTERIOR HM FRAME HEAD
1 1/2" = 1'-0"

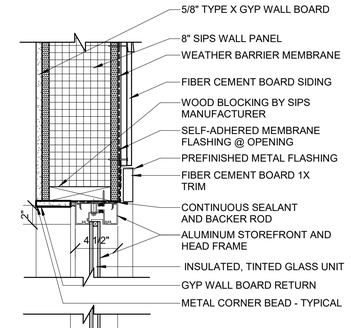

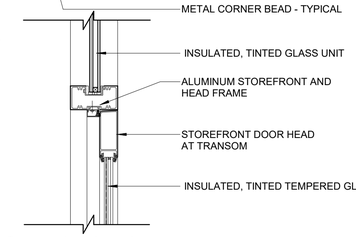

10 EXTERIOR STOREFRONT FRAME HEAD
1 1/2" = 1'-0"

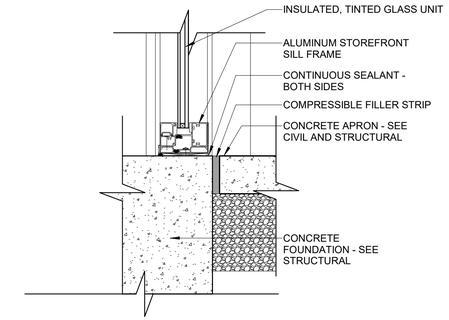

13 STOREFRONT FRAME SILL
1 1/2" = 1'-0"

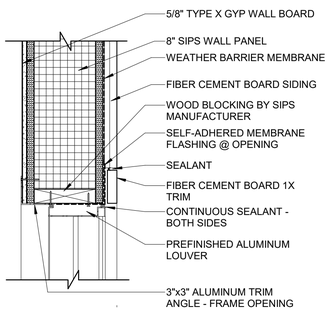

2 LOUVER JAMB
1 1/2" = 1'-0"

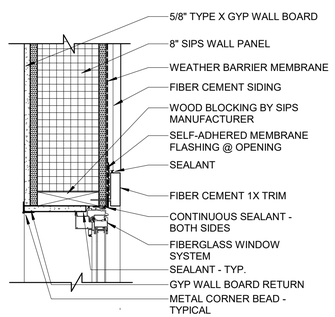

5 WINDOW JAMB
1 1/2" = 1'-0"

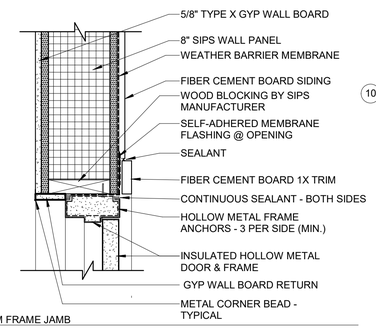

8 EXTERIOR HM FRAME JAMB
1 1/2" = 1'-0"

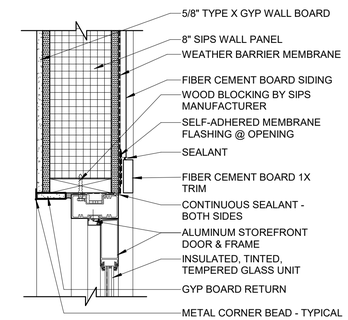

11 EXTERIOR SF FRAME JAMB
1 1/2" = 1'-0"

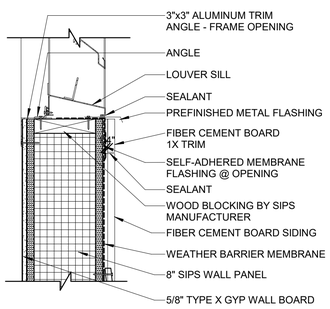

3 LOUVER SILL
1 1/2" = 1'-0"

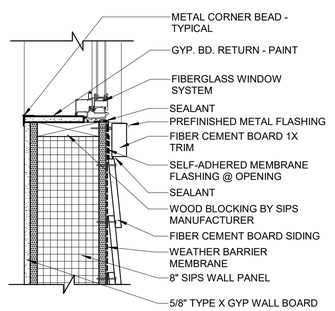

6 WINDOW SILL
1 1/2" = 1'-0"

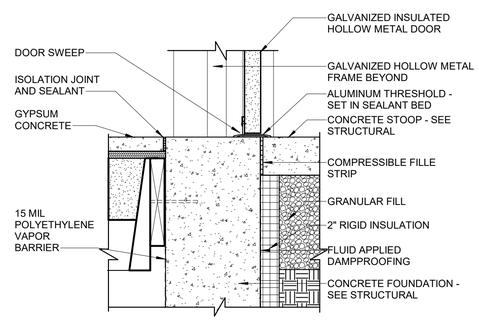

9 EXTERIOR HM FRAME SILL
1 1/2" = 1'-0"

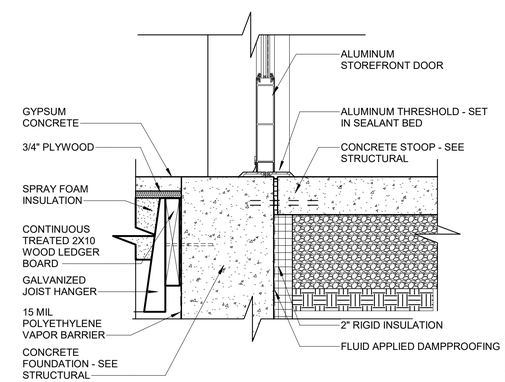

20 STOREFRONT DOOR SILL
1 1/2" = 1'-0"

0 1' 2'
SCALE: 1 1/2"=1'-0"

I hereby certify that this plan specification, or report was prepared by me or under my direct supervision, and that I am a duly Registered Architect under the laws of the State of North Dakota.

Andrew John Haynes

Date 08/09/2022 Lic..No. 2359

C:\REVIT_2020_PROJECT_FILES\29320.00 LONG LAKE HQ_A_9922.rvt

LONG LAKE NWR **EXTERIOR DETAILS** NEW HEADQUARTERS AND VISITOR CENTER					SUB-SHEET A-501
DESIGNED CH	DRAWN CH	CHECKED AJH	DATE 2022.05.09	DRAWING NO.	SHEET 27 OF 66

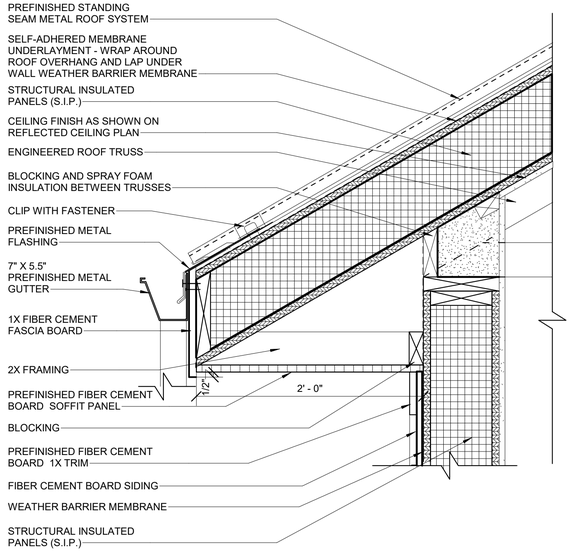

2 GUTTER DETAIL
1 1/2" = 1'-0"

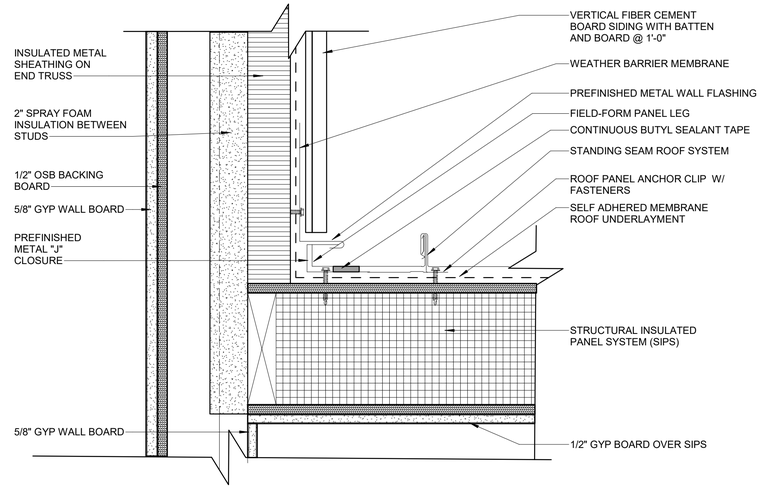

6 RAKE TO SIDING WALL DETAIL
3" = 1'-0"

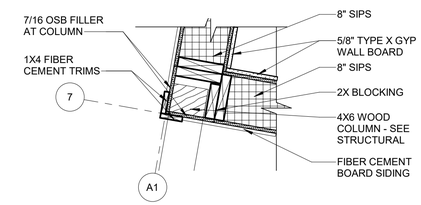

7 CORNER COLUMN DETAL
1" = 1'-0"

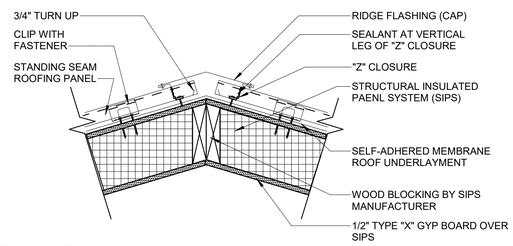

5 RIDGE DETAIL
1 1/2" = 1'-0"

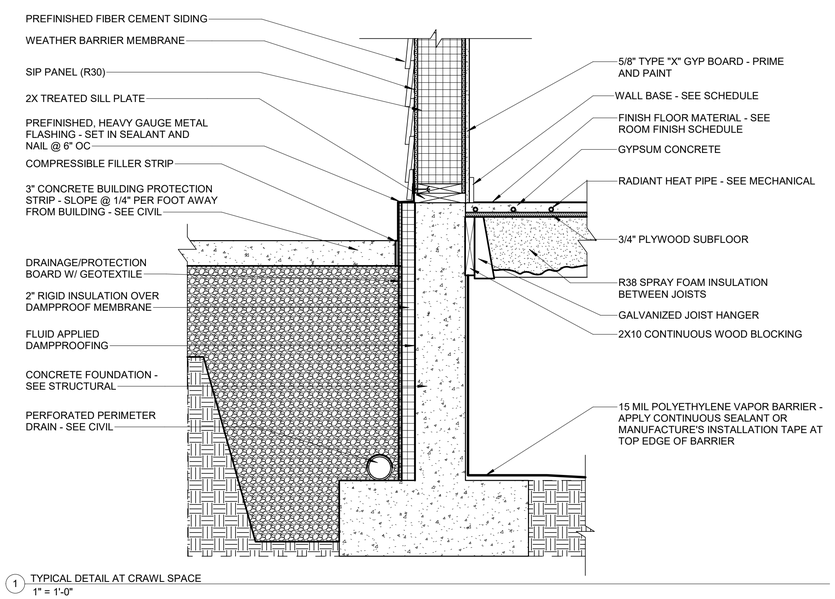

1 TYPICAL DETAIL AT CRAWL SPACE
1" = 1'-0"

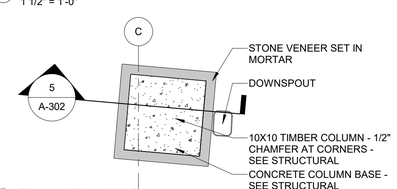

4 COLUMN DETAIL AT BASE
1" = 1'-0"

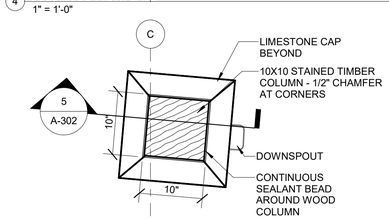

3 COLUMN DETAIL AT TOP
1" = 1'-0"

0 1' 2'
SCALE: 1 1/2"=1'-0"

0 6" 1' 2'
SCALE: 1" =1'-0"

I hereby certify that this plan specification, or report was prepared by me or under my direct supervision, and that I am a duly Registered Architect under the laws of the State of North Dakota.
Andrew John Haynes
Date 05/09/2022 Lic..No. 2359

C:\REVIT_2020_PROJECT_FILES\29320.00 LONG LAKE HQ_A_9922.rvt

LONG LAKE NWR **DETAILS** NEW HEADQUARTERS AND VISITOR CENTER					SUB-SHEET A-502
DESIGNED CH	DRAWN CH	CHECKED AJH	DATE 2022.05.09	DRAWING NO.	SHEET 28 OF 66

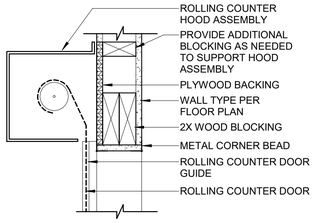

1 INTERIOR ROLLING COUNTER DOOR HEAD
1 1/2" = 1'-0"

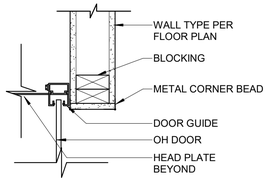

2 INTERIOR ROLLING COUNTER DOOR JAMB
1 1/2" = 1'-0"

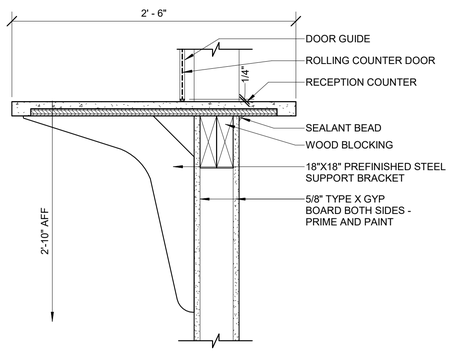

3 INTERIOR ROLLING COUNTER DOOR SILL
1 1/2" = 1'-0"

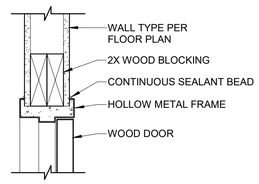

4 INTERIOR HOLLOW METAL FRAME HEAD
1 1/2" = 1'-0"

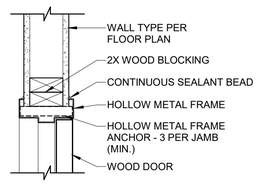

5 INTERIOR HOLLOW METAL FRAME JAMB
1 1/2" = 1'-0"

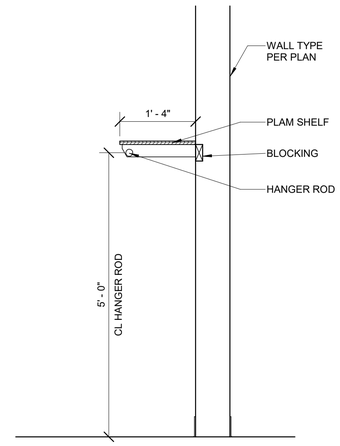

6 TYPICAL CLOSET DETAIL
3/4" = 1'-0"

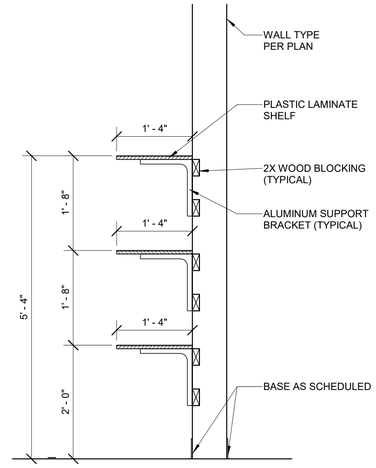

7 SHELVING
3/4" = 1'-0"

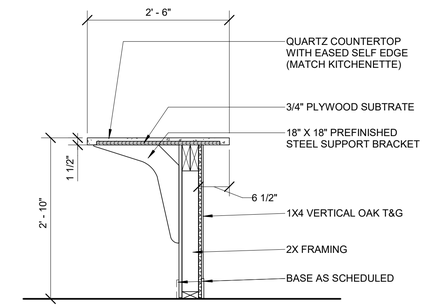

8 RECEPTION DESK SECTION
3/4" = 1'-0"

0 1' 2'
SCALE: 1 1/2"=1'-0"

0 1' 2' 3'
SCALE: 3/4"=1'-0"

I hereby certify that this plan specification, or report was prepared by me or under my direct supervision, and that I am a duly Registered Architect under the laws of the State of North Dakota.

Andrew John Haynes

Date 05/09/2022 Lic..No. 2359

C:\REVIT_2020_PROJECT_FILES\29320.00 LONG LAKE HQ_A_9922.rvt

LONG LAKE NWR **DETAILS** NEW HEADQUARTERS AND VISITOR CENTER					SUB-SHEET A-503
DESIGNED CH	DRAWN CH	CHECKED AJH	DATE 2022.05.09	DRAWING NO.	SHEET 29 OF 66

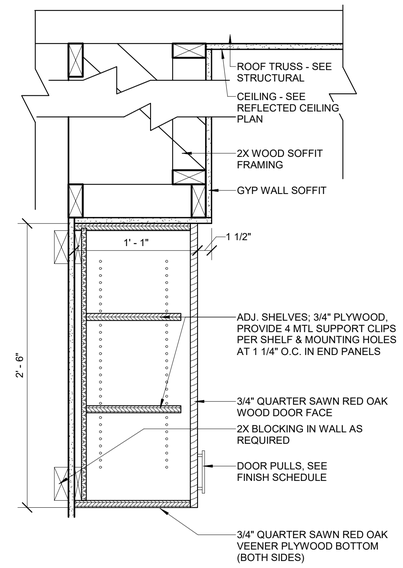

1 CASEWORK - TYP UPPER CABINET
1 1/2" = 1'-0"

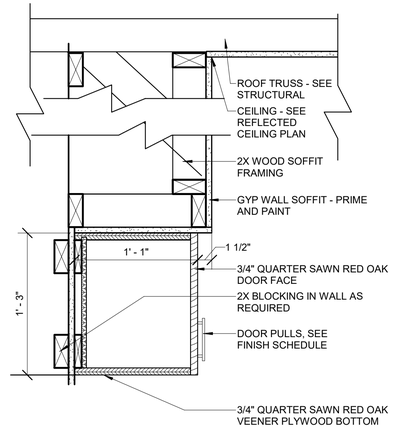

2 CASEWORK - UPPER CABINET
1 1/2" = 1'-0"

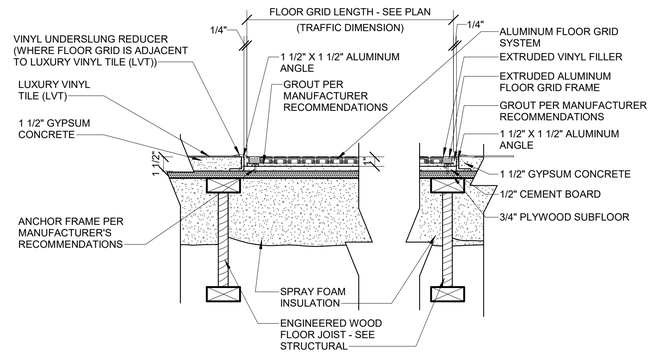

10 WALK OFF MAT DETAIL
1 1/2" = 1'-0"

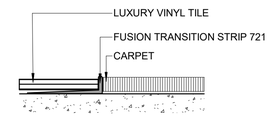

7 FLOOR TRANSITION - LUXURY VINYL TILE TO CARPET
3" = 1'-0"

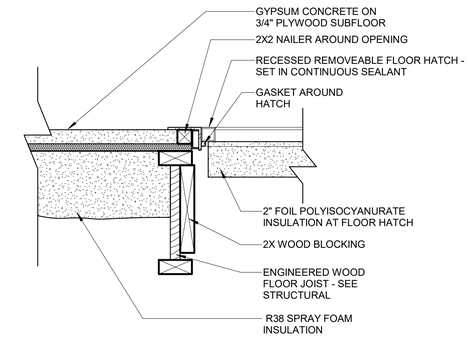

NOTE: CENTER ACCESS PANEL BETWEEN TRUSSES

8 FLOOR HATCH DETAIL
1 1/2" = 1'-0"

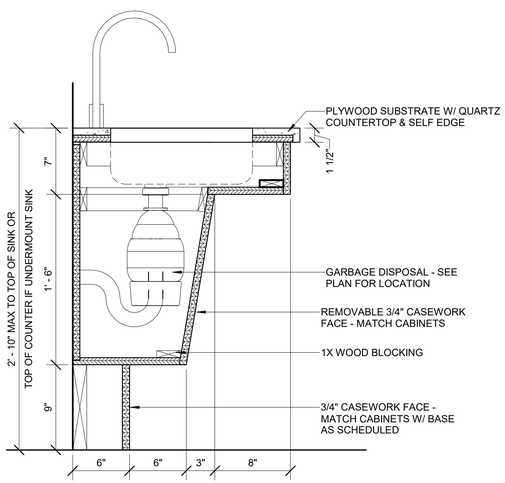

11 ADA ACCESS SINK BASE
1 1/2" = 1'-0"

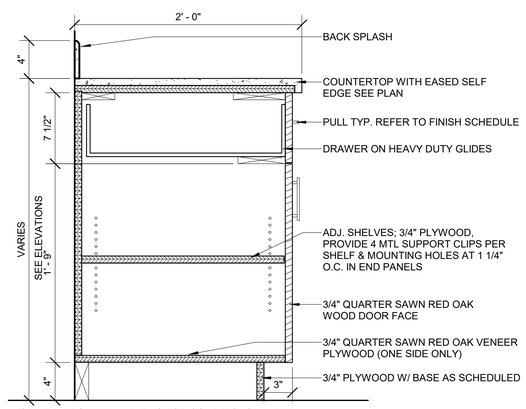

*SEE ENLARGED PLAN VIEWS FOR CONDITIONS WHERE COUNTERTOP EQUIPMENT REQUIRES ADDITIONAL DEPTH.

3 CASEWORK - TYP BASE CABINET
1 1/2" = 1'-0"

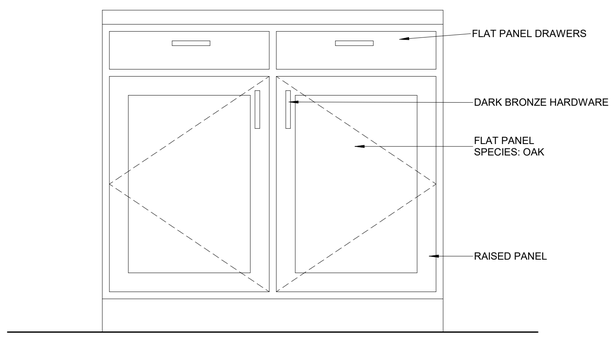

4 CASEWORK STYLE
1 1/2" = 1'-0"

0 6" 1' 2'
SCALE: 3"=1'-0"

0 1' 2'
SCALE: 1 1/2"=1'-0"

I hereby certify that this plan specification, or report was prepared by me or under my direct supervision, and that I am a duly Registered Architect under the laws of the State of North Dakota.
Andrew John Haynes
Date 05/09/2022 Lic..No. 2359

C:\REVIT_2020_PROJECT_FILES\29320.00 LONG LAKE HQ_A_9922.rvt

LONG LAKE NWR					SUB-SHEET
DETAILS					A-504
NEW HEADQUARTERS AND VISITOR CENTER					
DESIGNED CH	DRAWN CH	CHECKED AJH	DATE 2022.05.09	DRAWING NO.	SHEET 30 OF 66

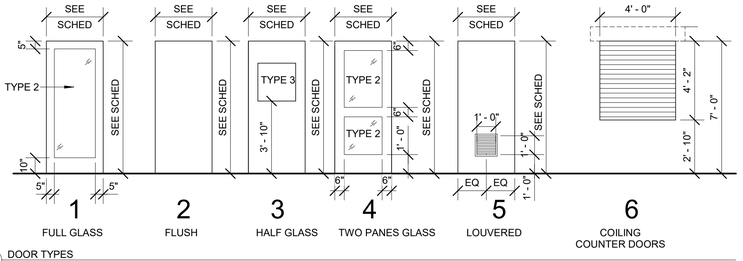

1 DOOR TYPES
1/4" = 1'-0"

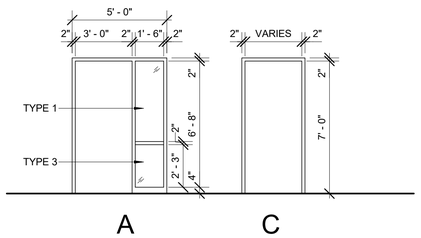

2 FRAME TYPES
1/4" = 1'-0"

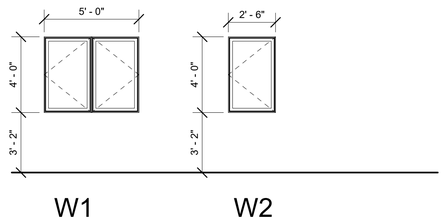

3 WINDOW TYPES
1/4" = 1'-0"

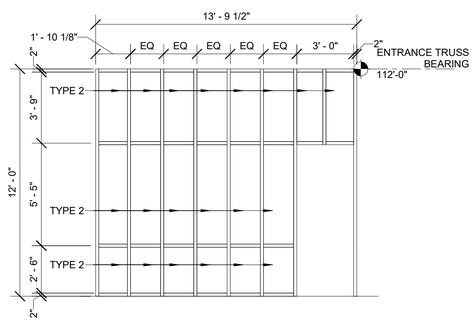

SF1 - SOUTH STOREFRONT ELEVATION

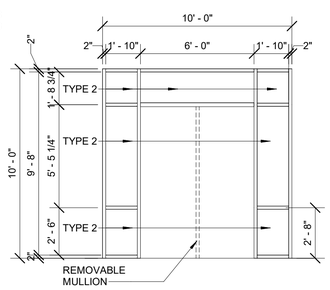

SF2 - NORTH STOREFRONT ELEVATION - EXTERIOR

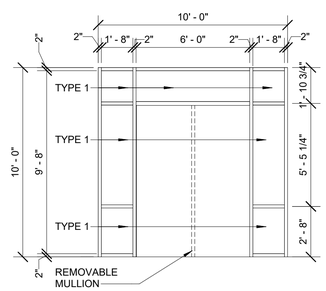

SF3 - NORTH STOREFRONT ELEVATION - INTERIOR

4 STOREFRONT ELEVATIONS
1/4" = 1'-0"

DOOR SCHEDULE

DOOR NO.	DOOR PANEL WIDTH	DOOR PANEL HEIGHT	DOOR PANEL MATL	DOOR PANEL LEAVES	DOOR TYPE	FRAME TYPE	FRAME MATL	DETAILS HEAD	DETAILS JAMB	DETAILS SILL	GLAZING SIZE	HARDWARE SET	REMARKS
100A	6'-0"	7'-0"	HM	2	2	C	HM	15/A-501	16/A-501	17/A-501		06	2
100B	3'-0"	7'-0"	WD	1	1	C	HM	11/A-501	12/A-501	-		12	
101A	3'-0"	7'-0"	HM	1	4	C	HM	15/A-501	16/A-501	17/A-501	4" X 30"	05	1, 2
101B	3'-0"	7'-0"	WD	1	3	C	HM	11/A-501	12/A-501	-	24" X 24"	10	
102	3'-0"	7'-0"	WD	1	2	C	HM	11/A-501	12/A-501	-		12	
103	3'-0"	7'-0"	WD	1	2	C	HM	11/A-501	12/A-501			08	
104	3'-0"	7'-0"	WD	1	2	C	HM	11/A-501	12/A-501			08	
106A	6'-0"	8'-0"	ALUM	2	1	SF2	ALUM	18/A-501	19/A-501	20/A-501		01	1, 3
106B	6'-0"	8'-0"	ALUM	2	1	SF3	ALUM	18/A-501	19/A-501	20/A-501		02	1.3
107	3'-0"	8'-0"	ALUM	1	1	SF1	ALUM	18/A-501	19/A-501	20/A-501		03	
110	3'-0"	7'-0"	WD	1	2	A	HM	11/A-501	12/A-501			11	
111	3'-0"	7'-0"	WD	1	2	A	HM	11/A-501	12/A-501			09	
113	3'-0"	7'-0"	WD	1	2	A	HM	11/A-501	12/A-501			09	
114	3'-0"	7'-0"	WD	1	2	A	HM	11/A-501	12/A-501			09	
115	3'-0"	7'-0"	WD	1	2	A	HM	11/A-501	12/A-501			09	
116	3'-0"	7'-0"	WD	1	2	A	HM	11/A-501	12/A-501			09	
117	3'-0"	7'-0"	HM	1	2	C	HM	11/A-501	12/A-501			07	
119	3'-0"	7'-0"	HM	1	4	C	HM	15/A-501	16/A-501	17/A-501		04	1, 2
120	3'-0"	7'-0"	WD	1	5	C	HM	11/A-501	12/A-501			12	4
121	3'-0"	7'-0"	HM	1	5	C	HM	11/A-501	12/A-501			12	
123	3'-0"	7'-0"	WD	1	2	C	HM	11/A-501	12/A-501			08	
124	3'-0"	7'-0"	WD	1	5	C	HM	11/A-501	12/A-501			08	
156	4'-0"	4'-2"	ST		6		ST	1/A-503	2/A-503	3/A-503			

NOTE:
1. PREP DOOR TO RECEIVE ACCESS CONTROL. ACCESS CONTROL BY OTHER.
2. GALVANIZED, INSULATED
3. REMOVABLE MULLION
4. 12" X 12" LOUVER

ROOM FINISH SCHEDULE

ROOM NO.	ROOM NAME	FLOOR	BASE (SKIRTING)	WALLS	CEILING MATERIAL	CEILING HEIGHT	REMARKS
100	MECH/ELEC	LVT	RB	PGB	EXPOSED STRUCT		
101	CONFERENCE/BREAK	LVT/CARPET	WD/RB	PGB	PGB	10'-0"	1
102	STORAGE	LVT	WD	PGB	ACT	8'-0"	
103	RESTROOM	LVT	TCB	PGB/WT	PGB	8'-0"	2
104	RESTROOM	LVT	TCB	PGB/WT	PGB	8'-0"	2
105	HALL	LVT	WD	PGB	PGB	8'-0"	
106	VESTIBULE	LVT	WD	PGB	PGB	10'-0"	
107	VISITOR CONTACT	LVT	WD	PGB	EXPOSED STRUCT		3
108	WORK ROOM	CPT	WD	PGB	ACT	8'-0"	
109	ADMIN	CPT	WD	PGB	ACT	8'-0"	
111	OFFICE	CPT	WD	PGB	PGB	10'-0"	
112	OPEN OFFICE	CPT	WD	PGB	ACT	9'-6"	
113	OFFICE	CPT	WD	PGB	PGB	10'-0"	
114	OFFICE	CPT	WD	PGB	PGB	10'-0"	
115	OFFICE	CPT	WD	PGB	PGB	10'-0"	
116	OFFICE	CPT	WD	PGB	PGB	10'-0"	
117	STORAGE	LVT	WD	PGB	ACT	8'-0"	
118	LOCKER	LVT	WD	PGB	PGB	8'-0"	
119	HALL	CPT	WD	PGB	ACT	8'-0"	
120	IT	LVT	WD	PGB	PGB	8'-0"	
121	SECURE STORAGE	LVT	WD	PGB	PGB	8'-0"	
122	FILES	CPT	WD	PGB	ACT	8'-0"	
123	RESTROOM	LVT	TCB	PGB/WT	PGB	8'-0"	2
124	JAN. CLOSET	LVT	RB	PGB	PGB	8'-0"	

NOTE:
1. RESILIENT BASE AT CABINET TOE KICK
2. CERAMIC TILE TO 3'-4" AFF
3. ACOUSTICAL GYPSUM BOARD BETWEEN TRUSSES

WINDOW SCHEDULE

MARK	HEIGHT	WIDTH	WINDOW TYPE
W1	4'-0"	5'-0"	CASEMENT WINDOW
W2	4'-0"	2'-6"	CASEMENT WINDOW

FINISH ABBREVIATIONS:

CPT - CARPET TILE
LVT - LUXURY VINYL TILE

RB - RESILIENT BASE
TCB - TILE COVE BASE
WD - STAINED WOOD BASE

P1 - PAINT COLOR 1
P2 - PAINT COLOR 2
WT - WALL TILE

PGB - PAINTED GYPSUM BOARD

0 2' 4' 8'
SCALE: 1/4"=1'-0"

I hereby certify that this plan specification, or report was prepared by me or under my direct supervision, and that I am a duly Registered Architect under the laws of the State of North Dakota.
Andrew John Haynes
Date 05/09/2022 Lic..No. 2359

C:\REVIT_2020_PROJECT_FILES\29320.00 LONG LAKE HQ_A_9922.rvt

LONG LAKE NWR

SCHEDULES

NEW HEADQUARTERS AND VISITOR CENTER

SUB-SHEET A-601

DESIGNED	DRAWN	CHECKED	DATE	DRAWING NO.	SHEET
CH	CH	AJH	2022.05.09		31 OF 66

STRUCTURAL GENERAL NOTES

1. APPLICABLE SPECIFICATIONS AND CODES
   CONSTRUCTION AND DESIGN SHALL BE IN ACCORDANCE WITH THE INTERNATIONAL BUILDING CODE (IBC), 2018 EDITION, AND WITH THE LATEST EDITION OF THE APPLICABLE SPECIFICATIONS AND REQUIREMENTS NOTED AS FOLLOWS.
2. SPECIAL INSPECTION
   a. SOILS - TABLE 1705.6 OF THE IBC
      i. PERIODIC INSPECTION OF FOUNDATION SOIL BEARING CAPACITY, DEPTH, FILL MATERIALS CLASSIFICATION AND SUBGRADE PREPARATION AND COMPACTION.
      ii. FULL TIME INSPECTION OF ENGINEERED FILL PLACEMENT AND COMPACTION.
   b. CONCRETE - TABLE 1705.3 OF THE IBC
      i. PERIODIC INSPECTION OF REINFORCEMENT BEFORE CONCRETE IS PLACED.
      ii. FULL TIME INSPECTION OF ANCHOR RODS AND OTHER EMBEDDED ITEMS AS IDENTIFIED HEREIN.
      iii. FULL TIME INSPECTION DURING PLACEMENT OF CONCRETE INCLUDING THE TAKING OF TEST SPECIMENS, SLUMP AND AIR CONTENT MEASUREMENT. INSPECTION AND TESTING SHALL BE LIMITED TO STRUCTURAL REINFORCED CONCRETE WITH TESTING FREQUENCY IN ACCORDANCE WITH THE PROJECT TECHNICAL SPECIFICATIONS.
   c. STEEL - AISC 360 FOR STRUCTURAL STEEL, IBC SECTION 1705.2 FOR STEEL CONSTRUCTION OTHER THAN STRUCTURAL STEEL (COLD-FORMED STEEL, REBAR, ETC.)
      i. FULL TIME INSPECTION FOR HIGH-STRENGTH BOLTING FOR SLIP CRITICAL CONNECTIONS PER AISC SPECIFICATION FOR STRUCTURAL JOINTS USING ASTM A325 OR A490 BOLTS.
      ii. PERIODIC INSPECTION FOR HIGH STRENGTH BOLTING FOR BEARING TYPE CONNECTIONS PER AISC SPECIFICATION FOR STRUCTURAL JOINTS USING ASTM A325 OR A490 BOLTS.
      iii. FULL TIME INSPECTION OF COMPLETE AND PARTIAL PENETRATION GROVE WELDS, MULTI-PASS FILLET WELDS AND SINGLE PASS FILLET WELDS GREATER THAN 5/16" IN ACCORDANCE WITH AWS D1.1.
      iv. PERIODIC INSPECTION OF FRAME JOINT DETAILS FOR COMPLIANCE WITH THE PLANS AND SPECIFICATIONS
   d. WOOD
      i. PERIODIC INSPECTION OF DIAPHRAGMS AND SHEAR WALLS FOR COMPLIANCE WITH PLANS AND SPECIFICATION REQUIREMENTS. INCLUDED IS THE SHEATHING TYPE AND THICKNESS; VERIFICATION OF FRAMING MEMBERS OF CONSTRUCTED ASSEMBLIES WITHIN THE FIELD AND AT BOUNDARY ELEMENTS; FASTENER TYPE, DIAMETER AND LENGTH; FASTENER SPACING AT INTERMEDIATE SUPPORTS AND AT BOUNDARY ELEMENTS.
      ii. PERIODIC INSPECTION OF HOLD DOWNS AND OTHER LATERAL FORCE RESISTING HARDWARE FOR CORRECT TYPE, FASTENING AND LOCATION.
3. DESIGN LOADS
   a. DESIGN LOADS AND LOAD APPLICATIONS SHALL BE IN ACCORDANCE WITH IBC.
   b. UNIFORM FLOOR LIVE LOADS
      i. ALL FLOOR AREAS, UNLESS OTHERWISE INDICATED - - - 50 PSF + 15 PSF PARTITION
      ii. STAIRS, LANDINGS, CORRIDORS - 100 PSF
      iii. STORAGE ROOMS - 125 PSF
      iv. MECHANICAL ROOM - 150 PSF
      v. FLOOR LIVE LOAD REDUCTIONS APPLIED IN ACCORDANCE WITH IBC.
   c. ROOF LOADS
      i. MINIMUM ROOF LIVE LOAD - 20 PSF
      ii. MINIMUM ROOF SNOW LOAD - 28 PSF
      iii. DRIFT SURCHARGE LOADS IN ACCORDANCE WITH ASCE 7.
         (a) BASIC GROUND SNOW LOAD - 40 PSF
         (b) IMPORTANCE FACTOR - I = 1.00
   d. WIND LOADS IN ACCORDANCE WITH CHAPTER 26 OF ASCE 7
      i. OCCUPANCY OR RISK CATEGORY - II
      ii. BASIC WIND SPEED (3-SEC GUST) - 112 MPH
      iii. EXPOSURE CATEGORY - C
   e. SEISMIC LOADS
      i. IMPORTANCE FACTOR - I = 1.00
      ii. MAPPED SPECTRAL RESPONSE S_S - 0.054
      iii. MAPPED SPECTRAL RESPONSE S_1 - 0.022
      iv. SITE CLASS - D
      v. SPECTRAL RESPONSE COEFFICIENT S_{DS} - - - - - - - - - - - - - - - - - 0.058
      vi. SPECTRAL RESPONSE COEFFICIENT S_{D1} - - - - - - - - - - - - - - - - 0.036
      vii. SEISMIC DESIGN CATEGORY - B
      viii. BASIC SEISMIC-FORCE-RESISTING SYSTEM - - - - STRUCTURAL INSULATED PANEL SHEAR WALLS
      ix. DESIGN BASE SHEAR - 56.3 KIPS
      x. SEISMIC RESPONSE COEFFICIENT C_s - - - - - - - - - - - - - - - - - - - 0.008
      xi. RESPONSE MODIFICATION FACTOR R - 6.5
      xii. ANALYSIS PROCEDURE USED - - - - EQUIV. LATERAL FORCE SPECIAL LOADS
   f. SPECIAL LOADS
      i. MECHANICAL EQUIPMENT LOADS - - - - - - - - - - - ACTUAL OPERATING LOADS
      ii. CEILING FRAMING LIVE LOAD - 10 PSF
      iii. PARTITIONS AND INTERIOR WALLS LIVE LOAD - - - - - - - - - - - 5 PSF LATERAL
   g. ADDITIONAL LOADS REFERENCED ON THE DRAWINGS.
   h. BUILDING CONSTRUCTION TYPE - TYPE VB NR FRAMING
4. CONSTRUCTION LOADS
   STRUCTURES HAVE BEEN DESIGNED FOR DEAD LOADS AND THE DESIGN LOADS NOTED ABOVE. PROVIDE TEMPORARY BRACING, SHORING OR OTHER SUPPLEMENTAL SUPPORT DURING CONSTRUCTION AS NECESSARY TO PROTECT THE STRUCTURES FROM EXCESSIVE CONSTRUCTION LOADS.
5. FOUNDATIONS
   a. FOUNDATION DESIGN CRITERIA
      i. MAXIMUM ALLOWABLE SOIL BEARING PRESSURE - - - - - - - - - - - - - 1,200 PSF
      ii. LATERAL SOIL PRESSURE - - - - - - - - - - - - - - - 60 PCF EQUIV. FLUID PRESSURE
      iii. DESIGN FROST DEPTH BELOW EXTERIOR GRADE - - - - - - - - - - - - - - - - 4 FEET
   b. AVOID EXCESSIVE WETTING OR DRYING OF THE FOUNDATION EXCAVATIONS DURING CONSTRUCTION.
   c. BACKFILL ON WALLS WITH FILL ON BOTH SIDES SHALL BE COMPACTED IN EQUAL LIFTS EACH SIDE OF WALL. WALLS BACKFILLED FROM ONE SIDE ONLY SHALL HAVE ALL SUPPORTING SLABS, PERMANENT FRAMING OR TEMPORARY BRACING IN PLACE PRIOR TO PLACEMENT OF BACKFILL.
6. CONCRETE
   a. CONCRETE CONSTRUCTION SHALL CONFORM TO THE AMERICAN CONCRETE INSTITUTE BUILDING CODE REQUIREMENTS FOR REINFORCED CONCRETE (ACI 318)
   b. DETAILING, FABRICATION AND PLACEMENT OF REINFORCEMENT SHALL CONFORM TO DETAILS AND DETAILING OF CONCRETE REINFORCEMENT (ACI 315)
   c. MATERIALS
      i. CONCRETE
         (a) STRUCTURAL CAST-IN-PLACE - f'_c = 4,000 PSF
         (b) EXTERIOR WALKS, CURBS, RAMPS - - - - - - - - - - - - - - - - f'_c = 3,000 PSF
      ii. REINFORCING MATERIALS
         (a) REINFORCING BARS - - - - - - - - - - - - - - - - - - ASTM A615, GRADE 60
         (b) WELDED WIRE FABRIC - - - - - - - - - - - - - - - - - ASTM A1064, GADE 70
   d. ALL BENT REINFORCING BARS SHALL BE SHOP FABRICATED ONLY. REBENDING OR WELDING OF REINFORCEMENT SHALL NOT BE PERMITTED UNLESS AUTHORIZED BY ENGINEER.
   e. END HOOKS IN REINFORCING BARS, SHOWN ON THE DRAWINGS BUT NOT DIMENSIONED, SHALL CONFORM TO ACI 318
   f. CONCRETE COVER OVER REINFORCEMENT SHALL BE 2" CLEAR, EXCEPT FOR THE FOLLOWING, UNLESS OTHERWISE NOTED.
      i. CONCRETE PLACED AGAINST AND PERMANENTLY IN CONTACT WITH EARTH - 3" CLEAR
      ii. CONCRETE NOT EXPOSED TO WEATHER OR IN CONTACT WITH EARTH OR WATER
         (a) BEAMS, COLUMNS - 1 1/2" CLEAR
         (b) WALLS - 1 1/2" CLEAR
         (c) SLABS - 3/4" CLEAR
   g. REINFORCEMENT SPLICES NOT PERMITTED EXCEPT AS DETAILED OR AUTHORIZED BY THE ENGINEER. LAP REINFORCING BARS THE FOLLOWING MINIMUMS AT ALL SPLICES, CORNERS AND INTERSECTIONS, UNLESS OTHERWISE INDICATED. TOP BARS ARE HORIZONTAL BARS WITH MORE THAN 12" OF CONCRETE CAST BELOW THE BAR.

BAR SIZE	REG BARS	TOP BARS
#3	1' - 3"	1'-7"
#4	1'-7"	2'-1"
#5	2' - 0"	2'-7"

   h. LAP WELDED WIRE FABRIC ONE FULL MESH AT SPLICES.
   i. STAGGER ADJACENT REINFORCEMENT LAP SPLICES IN WALLS 18" MINIMUM.
   j. PROVIDE BAR SUPPORTS TO PROPERLY SECURE AND SUPPORT REINFORCING BARS AND WELDED WIRE FABRIC AT POSITIONS SHOWN ON THE DRAWINGS. IN ADDITION TO NORMAL ACCESSORIES PROVIDE #5 STANDEES AT 36" O.C. TO SUPPORT TOP REINFORCEMENT IN BASE SLABS, AND #3 U OR Z SHAPE SPACERS AT 72" O.C. EACH WAY IN WALLS WITH TWO CURTAINS OF REINFORCEMENT.
   k. DOWELS, PIPES AND OTHER INSTALLED MATERIALS AND ACCESSORIES SHALL BE HELD SECURELY IN POSITION DURING CONCRETE PLACEMENT.
   l. REINFORCING BARS AND ACCESSORIES SHALL NOT BE IN CONTACT WITH ANY PIPE, PIPE FLANGE OR METAL PART EMBEDDED IN CONCRETE. PROVIDE 2" CLEARANCE IN ALL CASES UNLESS OTHERWISE INDICATED. NO EMBEDDED ITEM SHALL BE SUSPENDED FROM, SUPPORTED BY, OR BRACED IN PLACE FROM THE STRUCTURAL REINFORCEMENT.
   m. LOCATE CONSTRUCTION JOINTS WHERE SHOWN ON THE DRAWINGS OR AS AUTHORIZED THE ENGINEER. SLAB, JOISTS AND BEAMS SHALL NOT HAVE JOINTS IN A HORIZONTAL PLANE EXCEPT WHERE DETAILED ON DRAWINGS.
   n. THOROUGHLY CLEAN BY SANDBLASTING ALL KEYWAYS AND CONSTRUCTION JOINTS PRIOR TO PLACING CONCRETE IN ADJACENT POUR.
   o. BEGIN SPACING OF BARS WHICH PARALLEL CONSTRUCTION AND EXPANSION JOINTS 2" CLEAR EACH SIDE OF JOINT.
   p. UNLESS OTHERWISE SHOWN, PLACE 2 - #5 (1 EACH FACE) WITH 2'-0" PROJECTIONS AROUND ALL OPENINGS IN CONCRETE WALLS OR SLABS.
   q. PROVIDE AN ADDITIONAL 200 LINEAL FEET EACH OF #4 AND #5 REINFORCING BARS FOR USE AS DIRECTED DURING CONSTRUCTION.
   r. CHAMFER ALL EXPOSED CONCRETE EDGES 3/4" UNLESS OTHERWISE INDICATED.
7. SLABS ON GRADE
   a. SLAB ON GRADE CONTROL JOINTS ARE DENOTED "CJ" ON DRAWINGS. SLAB ON GRADE CONSTRUCTION JOINTS ARE DENOTED "CONST JT." AT CONTRACTOR'S OPTION CONSTRUCTION JOINTS MAY BE SUBSTITUTED FOR CONTROL JOINTS.
   b. LOCATE WELDED WIRE FABRIC 1 1/2" CLEAR FROM TOP OF SLAB.
   c. PROVIDE 1 - #4 X 4'-0" PARALLEL TO EDGE OF SLAB OPPOSITE THE END OF ALL DISCONTINUED SLAB JOINTS, AND 1 - #4 X 4'-0" DIAGONAL BAR AT ALL REENTRANT CORNERS. PLACE BARS MID-DEPTH IN SLAB AND 2" CLEAR FROM EDGE OR CORNER.
   d. SLOPE BOTTOM SURFACE OF SLABS AS NECESSARY TO MAINTAIN MINIMUM THICKNESS NOTED ON DRAWINGS FOR ALL SLABS WITH SLOPING TOP SURFACE OR DEPRESSION FOR TILE.
8. STRUCTURAL STEEL
   a. STRUCTURAL STEEL CONSTRUCTION SHALL CONFORM TO THE AMERICAN INSTITUTE OF STEEL CONSTRUCTION (AISC) SPECIFICATION FOR THE DESIGN, FABRICATION AND ERECTION OF STRUCTURAL STEEL BUILDINGS.
   b. MATERIAL
      i. STRUCTURAL STEEL W-SHAPES - - - - - - - - ASTM A992, GRADE 50
      ii. STRUCTURAL STEEL PLATES, BARS, ANGLES, AND CHANNELS - - - - - - - - - - - - - - ASTM A36
      iii. HOLLOW STRUCTURAL STEEL - - - - - - - - - ASTM A500, GRADE B
      iv. STEEL PIPE - ASTM A53, GRADE B
      v. HIGH-STRENGTH BOLTS - - - - - - - - - - - - - - ASTM A325
      vi. ANCHOR RODS - ASTM F1554, GRADE 36
      vii. HEADED ANCHOR STUDS (HAS) - - - - - - - - ASTM A108, TYPE B
   c. ALL STRUCTURAL STEEL BOLTED CONNECTIONS SHALL BE SNUG-TIGHTENED, 3/4" DIAMETER A325 - N BOLTS WITH STANDARD HOLTS, UNLESS OTHERWISE NOTED.
   d. ALL WELDING SHALL CONFORM TO AMERICAN WELDING SOCIETY STRUCTURAL WELDING CODE - STEEL (AWS D1.1) AND SHALL BE PERFORMED BY WELDERS QUALIFIED BY THE APPROPRIATE AWS TEST FOR THE WELDING PERFORMED.
   e. ALL STRUCTURAL STEEL DESIGNATED (AESS) ON DRAWINGS SHALL CONFORM TO AISC SPECIFICATIONS FOR ARCHITECTURALLY EXPOSED STRUCTURAL STEEL.
9. WOOD FRAMING
   a. WOOD CONSTRUCTION SHALL CONFORM TO IBC
   b. MATERIALS
      i. STRUCTURAL LUMBER - - - - - - - - - - - - - - HEM-FIR
         (a) 2" TO 4" THICK X 4" WIDE - - - - - - - - STANDARD GRADE
         (b) 2" TO 4" THICK X 5" AND WIDER - - - NO.1 GRADE
      ii. PLYWOOD SHEATHING - - - - - - - - - - - - - - - - APA RATED SHEATHING
         (a) FLOOR SHEATHING - - - - - - - - - - - - - 48/24 EXPOSURE 1
         (b) WALL SHEATHING - - - - - - - - - - - - - - 24/0 EXPOSURE 1
         (c) ROOF SHEATHING - - - - - - - - - - - - - - 40/20 EXPOSURE 1
      iii. STRUCTURAL GLUE-LAMINATED TIMBER
         (a) COMBINATION SYMBOL - - - - - - - - - DF 1.6 L2
         (b) CONDITION OF USE - - - - - - - - - - - - DRY (MOISTURE CONTENT IN SERVICE LESS THAN 16%)
         (c) APPEARANCE GRADE - - - - - - - - - - - ARCHITECTURAL
      iv. MICROLLAM TIMBERS - - - - - - - - - - - - - - - TRUS JOIST CORP. OR EQUAL
         (a) MINIMUM THICKNESS - - - - - - - - - - - 1 3/4"
         (b) ALLOWABLE BENDING STRESS, F_b = 2,600 PSI
         (c) ALLOWABLE SHEAR STRESS, F_v = 285 PSI
         (d) ELASTIC MODULUS, E = 2,000,000 PSI
   c. PREFABRICATED WOOD TRUSSES SHALL CONFORM TO THE TRUSS PLATE INSTITUTE DESIGN SPECIFICATIONS FOR METAL PLATE CONNECTED WOOD TRUSSES. TRUSSES SHALL BE DESIGNED BY MANUFACTURER TO SUPPORT ALL SUPERIMPOSED DEAD LOADS AND THE DESIGN LOADS NOTED HEREIN.
      i. TRUSS CHORD MATERIALS TO BE HEM FIR NO. 1 OR BETTER
      ii. TRUSS GIRDER CHORDS TO BE DOUG FIR NO. 2 OR BETTER. MINIMUM CROSS SECTIONAL SIZES:
         (a) TOP CHORD - - - - - - - - - - - - - - - - 2X6
         (b) WEB PANES - - - - - - - - - - - - - - - - 2X4
         (c) BOTTOM CHORD - - - - - - - - - - - - 2X10
10. EQUIPMENT INSTALLATION
   a. ALL OPENINGS SHOWN SHALL BE VERIFIED, AND ALL STRUCTURAL DIMENSIONS AND DETAILS PERTAINING TO EQUIPMENT INSTALLATION SHALL BE COORDINATED BY THE CONTRACTOR WITH THE ACTUAL EQUIPMENT FURNISHED.
   b. EQUIPMENT SUPPORTS, ANCHORAGES AND OPENINGS NOT SHOWN ON THE STRUCTURAL DRAWINGS, BUT REQUIRED BY OTHER CONTRACT DRAWINGS, SHALL BE PROVIDED PRIOR TO PLACING CONCRETE.
11. ARCHITECTURAL ELEVATION 100'-0" = CIVIL/STRUCTURAL ELEVATION 1741.00

STRUCTURAL ABBREVIATIONS

A.B.	-ANCHOR BOLT	FAB.	-FABRICATE	PL	-PLATE
A/C	-AIR CONDITIONER	F.D.	-FLOOR DRAIN	PENETR.	-PENETRATION
ADJ.	-ADJACENT	F.N.	-FIELD NAILING	PERIM.	-PERIMETER
A.F.F.	-ABOVE FINISHED FLOOR	FIN.	-FINISH	PERP.	-PERPINDICULAR
A.F.G.	-ABOVE FINISHED GRADE	FLR.	-FLOOR	PRLIM.	-PRELIMINARY
AGGR.	-AGGREGATE	FDN.	-FOUNDATION	PROJ.	-PROJECTION
AHU	-AIR HANDLING UNIT	FRMG.	-FRAMING	PSF	-POUNDS PER SQUARE FOOT
ANCH.	ANCHOR	FT.	-FOOT	PSI	-POUNDS PER SQUARE INCH
∠	-ANGLE	FTG.	-FOOTING	PT.	-POINT
APPD.	-APPROVED				
APPROX.	-APPROXIMATE	GA.	-GAGE (OR GAUGE)	QTY.	-QUANTITY
ARCH'L	-ARCHITECTURAL	GALV.	-GALVANIZED		
@	-AT	G.L.	-GLULAM	R	-RADIUS
&	-AND	GR.	-GRADE BEAM	RD	-ROOF DRAIN
		GYP.	-GYPSUM	REF.	-REFERENCE (REFER TO)
BCX	-BOTTOM CHORD EXTENSION	GVW	-GROSS VEHICLE WEIGHT	REINF.	-REINFORCEMENT
BLDG.	-BUILDING			REM	-REMAINDER
BLK.	-BLOCK	H.S.	-HEADED STUD	REQD	-REQUIRED
BLKG.	-BLOCKING	HDR.	-HEADER	REQMT.	-REQUIREMENT
BM.	-BEAM	HGR.	-HANGER	RTU	-ROOF TOP UNIT
B.O.W.	-BOTTOM OF WALL	HORIZ.	-HORIZONTAL		
BP	-BASE PLATE	HT.	-HEIGHT	S.	-SOUTH
BRG.	-BEARING			SCHED.	-SCHEDULE
BSMT.	-BASEMENT	I.F.	-INSIDE FACE	SECT.	-SECTION
BOT.	-BOTTOM	IN.	-INCH	SHT.	-SHEET
BTWN.	-BETWEEN	INFO.	-INFORMATION	SIM.	-SIMILAR
BRDG.	-BRIDGING	INT.	-INTERIOR	SJ	-SAWN JOINT (CONTROL JOINT)
		INTERM.	-INTERMEDIATE	SP	-SPACE
CANT.	-CANTILEVER			SPEC.	-SPECIFICATIONS
CL	-CENTERLINE	JST.	-JOIST	SQ.	-SQUARE
C.I.P.	-CAST IN PLACE	JT.	-JOINT	STD.	-STANDARD
CJ	-CONTROL JOINT			STIFF.	-STIFFENER
CLR.	-CLEAR	K.	-KIP (1000 LBS)	STGR.	-STAGGERED
CMU	-CONCRETE MASONRY UNIT	KSF	-KIPS PER SQUARE FOOT	STL.	-STEEL
COL.	-COLUMN	KSI	-KIPS PER SQUARE INCH	STIR.	-STIRRUP
CONC.	-CONCRETE			STRUCT.	-STRUCTURAL
CONN.	-CONNECTION	LAT.	-LATERAL	SUPT.	-SUPPORT
CONST JT.	-CONSTRUCTION JOINT	LBS.	-PUNDS	SYMM.	-SYMMETRICAL
CONT.	-CONTINUOUS	LDGR.	-LEDGER		
CONTR.	-CONTRACTOR	LL	-LIVE LOAD	T & B	-TOP AND BOTTOM
COORD.	-COORDINATE	LLH	-LONG LEG HORIZONTAL	TCX	-TOP CHORD EXTENSION
CNTRD.	-CENTERED	LLV	-LONG LEG VERTICAL	TEMP.	-TEMPERATURE
		LONG.	-LONGITUDINAL	T & G	-TONGUE AND GROOVE
D.B.	-DIAGONAL BRACE			THK.	-THICKNESS
DBL.	-DOUBLE	MATL.	-MATERIAL	TJI	-TRUSS JOIST
DET.	-DETAIL	MAX.	-MAXIMUM	T.O.B.	-TOP OF BEAM
DIA. OR ( )	-DIAMETER	MC	-MOMENT CONNECTION	T.O.S.C.	-TOP OF STRUCTURAL CONCRETE
DIAG.	-DIAGONAL	MCJ	-MASONRY CONTROL JOINT	T.O.F.	-TOP OF FOOTING
DIM.	-DIMENSION	MECHL.	-MECHANICAL	T.O.S.	-TOP OF STEEL
DIST.	-DISTANCE	MEZZ.	-MEZZANINE	T.O.W.	-TOP OF WALL
DL	-DEAD LOAD	MFR.	-MANUFACTURER	TRANSV.	-TRANSVERSE
DWG.	-DRAWING	MIN.	-MINIMUM	TS	-TUBULAR STEEL
DWL.	-DOWEL	MISC.	-MISCELLANEOUS	TYP.	-TYPICAL
		M.L.	-MICRO-LAM BEAM		
E.	-EAST	MTL.	-METAL	U.N.O.	-UNLESS NOTED OTHERWISE
EA.	-EACH				
E.F.	-EACH FACE	N.	-NORTH	VAR.	-VARIES
E.N.	-EDGE NAILING	NO. OR #	-NUMBER	VERT.	-VERTICAL
EL.	-ELEVATION	NOM.	-NOMINAL		
ELEC.	-ELECTRICAL	N.S.	-NON-SHRINK	W.	-WEST
ENGR.	-ENGINEER	N.T.S.	-NOT TO SCALE	W/	-WITH
EPS	-EXPANDED POLY-STYRENE			WD.	-WOOD
EQ.	-EQUAL	O.C.	-ON CENTER	WL	-WIND LOAD
EXIST.	-EXISTING	O.D.	-OVERFLOW DRAIN	W/O	-WITHOUT
EXP.	-EXPANSION	O.F.	-OUTSIDE FACE	W.P.	-WORK POINT
EXT.	-EXTERIOR	O.H.	-OPPOSITE HAND	WT.	-WEIGHT
E.W.	-EACH WAY	OPNG.	-OPENING	W.W.F.	-WELDED WIRE FABRIC
		OPP.	-OPPOSITE		
				X.B.	-X-BRACE

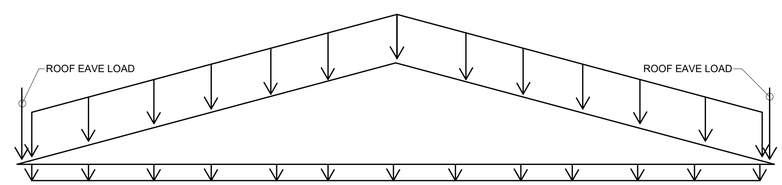

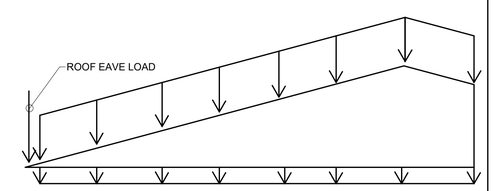

TRUSS NOTES:
1. TRUSS TOP CHORD LOADING
   A. DEAD LOAD - - - - - - - - - - 6 PSF
   B. LIVE LOAD - - - - - - - - - - 28 PSF
   C. SNOW LOAD - - - - - - - - 32 PSF
2. TRUSS BOTTOM CHORD LOADING
   A. DEAD LOAD - - - - - - - - - - 4 PSF
3. ROOF EAVE LOADING
   A. LIVE LOAD - - - - - - - - - - 40 PLF
   B. SNOW LOAD - - - - - - - - 70 PLF
4. UNBALANCED SNOW LOADS AS REQUIRED PER ASCE 7-16 CH. 7.

REGISTERED PROFESSIONAL ENGINEER
MATTHEW S. METTLER
PE-14474
DATE 5/9/2022
NORTH DAKOTA

LONG LAKE NWR					SUB-SHEET
GENERAL STRUCTURAL NOTES					S101
NEW HEADQUARTERS AND VISITOR CENTER					
DESIGNED SK	DRAWN VG	CHECKED MM	DATE 2022.05.09		SHEET 32 OF 66

c:\dowl_pw\d0394558\R20_27085_01_LongLake_BSM.rvt

FOUNDATION SCHEDULE				
ID	DEPTH	LENGTH	WIDTH	REINF.
WF1.5	10"	CONT	1'-6"	(2) #4 LONG, #4@16" (T)
WF2.0	10"	CONT	2'-0"	(3) #4 LONG, #4@16" (T)
F3.0	10"	3'-0"	3'-0"	(4) #4 EA WAY

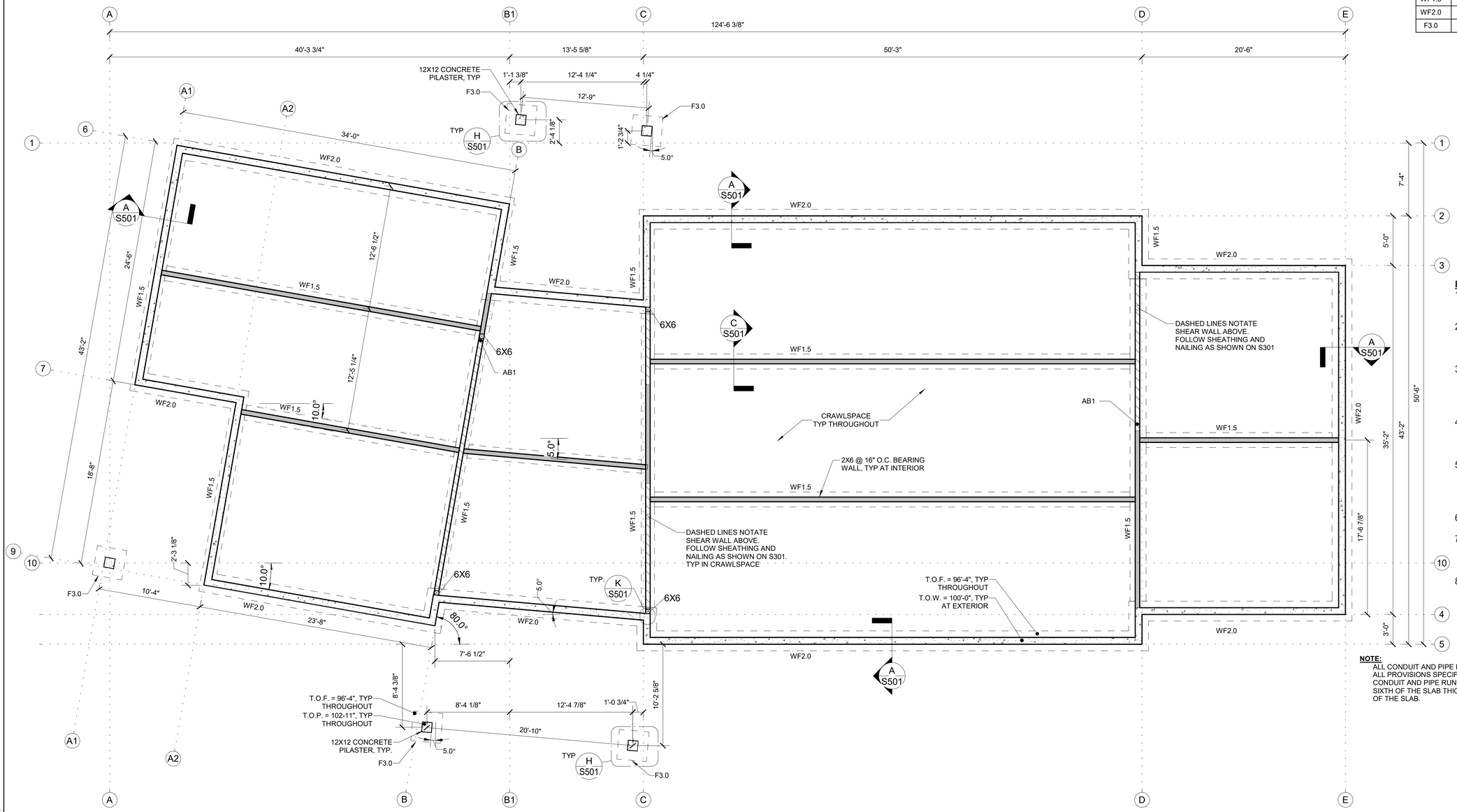

1 S201 BUILDING FOUNDATION PLAN

3/16" = 1'-0"

FOUNDATION PLAN NOTES:

1. REF. S101 FOR ADDITIONAL NOTES. REF. ARCHITECTURAL FOUNDATION PLAN FOR ADDITIONAL INFORMATION.
2. REF. STRUCTURAL INSULATED PANELS (SIP) SHOP DRAWINGS FOR ADDITIONAL INFORMATION THAT IS OUTSIDE THE SCOPE OF THESE DRAWINGS.
3. GUTTERS AND DOWNSPOUTS SHALL BE PROVIDED TO DIRECT WATER AWAY FROM THE FOUNDATION AT ALL TIMES. FINISHED GRADE SHALL SLOPE AWAY FROM THE BUILDING AT A MINIMUM OF 2% FOR A DISTANCE OF 10 FEET.
4. GENERAL CONTRACTOR TO COORDINATE ALL OPENING, PIPE SLEEVES, EMBEDDED ITEMS, HANDRAILS, GRATING, ETC. WITH OTHER CONTRACT DOCUMENTS.
5. CONTRACTOR SHALL COORDINATE ALL TOP OF WALL AND BEARING PLATE ELEVATIONS WITH THE ARCHITECTURAL DRAWINGS. THE GENERAL CONTRACTOR SHALL ASSUME RESPONSIBILITY FOR ANY DISCREPANCIES.
6. SEE SITE PLAN FOR ALL FINAL GRADE ELEVATIONS.
7. GENERAL CONTRACTOR SHALL SUBMIT A CONSTRUCTION JOINT LOCATION PLAN TO THE STRUCTURAL ENGINEER FOR REVIEW PRIOR TO CONCRETE PLACEMENT.
8. "AB1" STANDS FOR ANCHOR BOLT FOR HOLDOWN. USE 5/8"Ø F1554, GR 36 ALL THREAD W/ DOUBLE NUT AND WASHER EMBED IN FOOTING (MAINTAIN 3" CLR FROM BOTTOM). CENTER OF ANCHOR SHOULD BE 4-3/8" FROM END OF WOOD SHEAR WALL.

NOTE:
ALL CONDUIT AND PIPE EMBEDDED IN CONCRETE SHALL CONFORM WITH ALL PROVISIONS SPECIFIED IN ACI 318, SECTION 6.3. THE DIAMETER OF CONDUIT AND PIPE RUNNING WITHIN THE SLAB SHALL NOT EXCEED ONE SIXTH OF THE SLAB THICKNESS AND SHALL BE PLACED IN THE CENTER OF THE SLAB.

NORTH

REGISTERED PROFESSIONAL ENGINEER
MATTHEW J. METTLER
PE - 4124
DATE 5/9/2022
NORTH DAKOTA

c:\dcwl_pwl\d0394558\R20_27085_01_LongLake_BSM.rvt

LONG LAKE NWR

STRUCTURAL FOUNDATION PLAN

NEW HEADQUARTERS AND VISITOR CENTER

SUB-SHEET S201

DESIGNED	DRAWN	CHECKED	DATE		SHEET
SK	VG	MM	2022.05.09		33 OF 66

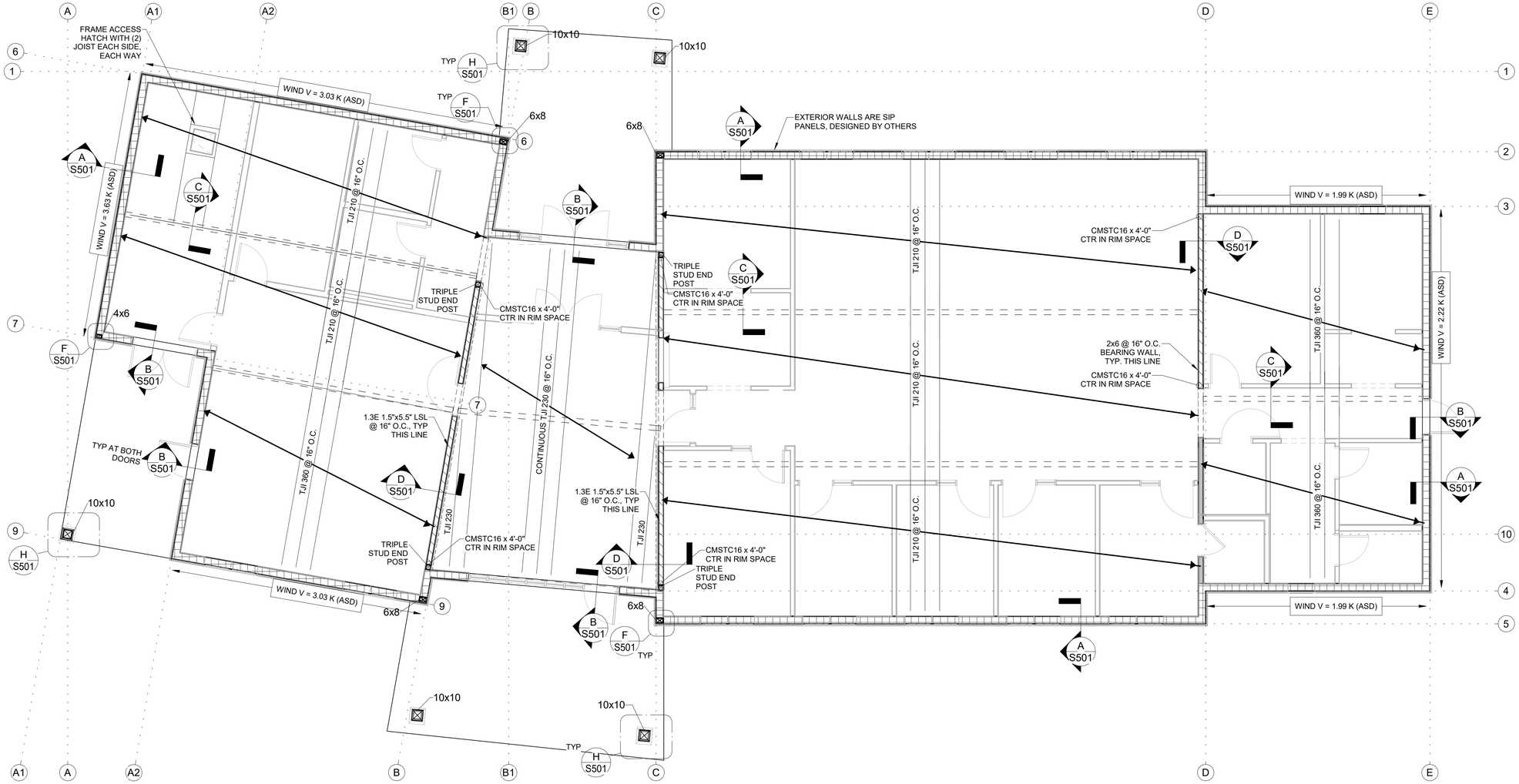

1 S301

FLOOR FRAMING PLAN

3/16" = 1'-0"

FLOOR FRAMING CONSTRUCTION NOTES:

1. REF. S101 FOR ADDITIONAL NOTES. REF. ARCHITECTURAL ROOF PLAN FOR ADDITIONAL INFORMATION.
2. GUTTERS AND DOWNSPOUTS SHALL BE PROVIDED TO DIRECT WATER AWAY FROM THE FOUNDATION AT ALL TIMES. FINISHED GRADE SHALL SLOPE AWAY FROM THE BUILDING AT A MINIMUM OF 2% FOR A DISTANCE OF 10 FEET.
3. COORDINATE SIZE AND LOCATION OF OPENINGS IN FLOOR FRAMING WITH THE ARCHITECTURAL DRAWINGS.
4. CONTRACTOR SHALL COORDINATE ALL TOP OF WALL AND BEARING PLATE ELEVATIONS WITH THE ARCHITECTURAL DRAWINGS.
5. ALL NAILERS, LEDGERS, AND BEARING PLATES THAT ARE EXPOSED TO MOISTURE OR COME INTO CONTACT WITH THE CONCRETE SHALL BE PRESSURE TREATED LUMBER OF THE SIZE INDICATED ON THE STRUCTURAL DRAWINGS.
6. INDICATES THE LOCATION OF STRUCTURAL BEARING WALL. SIP WALLS DESIGNED BY OTHERS.
7. INDICATES THE LOCATION OF SHEAR WALL. DASHED LINE INDICATES 1/2" PLYWOOD OR OSB (REF ARCH). PANEL EDGES TO BE FULLY BLOCKED AND ATTACHED WITH 10d COMMON NAILS AT 6" O.C. AT PANEL EDGES (EN) AND 12" O.C. FIELD NAILING (FN).
8. FLOOR DIAPHRAGM SHALL BE 3/4" PLYWOOD ATTACHED TO FRAMING WITH 10d COMMON NAILS AT 6" O.C. AT PANEL EDGES AND 12" O.C. FIELD.
9. INDICATES STRUCTURAL INSULATED PANEL (SIP), DESIGNED BY OTHERS.

NORTH

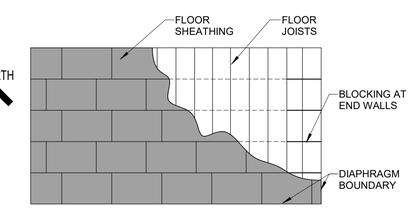

REGISTERED PROFESSIONAL ENGINEER
MATTHEW J. METTLER
PE - 4124
DATE 5/9/2022
NORTH DAKOTA

c:\dowl_pwrd\0394558\R20_27085_01_LongLake_BSM.rvt

LONG LAKE NWR **STRUCTURAL FLOOR PLAN** NEW HEADQUARTERS AND VISITOR CENTER					SUB-SHEET S301
DESIGNED SK	DRAWN VG	CHECKED MM	DATE 2022.05.09		SHEET 34 OF 66

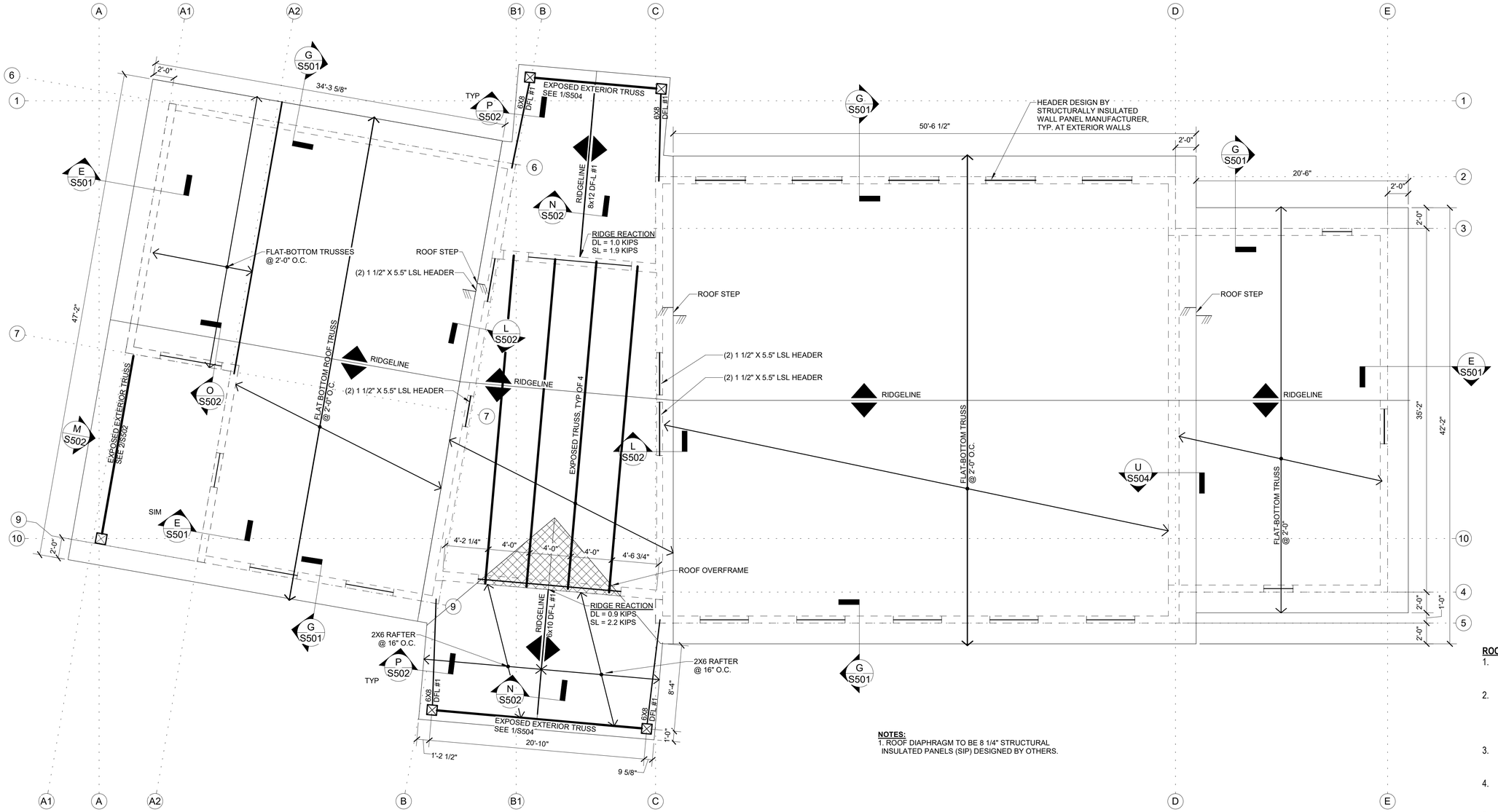

NOTES:
1. ROOF DIAPHRAGM TO BE 8 1/4" STRUCTURAL INSULATED PANELS (SIP) DESIGNED BY OTHERS.

ROOF FRAMING CONSTRUCTION NOTES:
1. REF. S101 FOR ADDITIONAL NOTES. REF. ARCHITECTURAL ROOF PLAN FOR ADDITIONAL INFORMATION.
2. GUTTERS AND DOWNSPOUTS SHALL BE PROVIDED TO DIRECT WATER AWAY FROM THE FOUNDATION AT ALL TIMES. FINISHED GRADE SHALL SLOPE AWAY FROM THE BUILDING AT A MINIMUM OF 2% FOR A DISTANCE OF 10 FEET.
3. COORDINATE SIZE AND LOCATION OF OPENINGS IN ROOF FRAMING WITH THE ARCHITECTURAL DRAWINGS.
4. CONTRACTOR SHALL COORDINATE ALL TOP OF WALL AND BEARING PLATE ELEVATIONS WITH THE ARCHITECTURAL DRAWINGS.
5. ALL NAILERS, LEDGERS, AND BEARING PLATES THAT ARE EXPOSED TO MOISTURE OR COME INTO CONTACT WITH THE CONCRETE SHALL BE PRESSURE TREATED LUMBER OF THE SIZE INDICATED ON THE STRUCTURAL DRAWINGS.
6. - - - - - - - - INDICATES BEARING WALL BELOW. SEE S301 FOR ADDITIONAL INFO ON WALL TYPES
7. ROOF DIAPHRAGM SHALL BE STRUCTURAL INSULATED PANEL (SIP) DESIGNED AND FASTENED BY OTHERS.

NORTH

1 / S401 ROOF FRAMING PLAN
3/16" = 1'-0"

REGISTERED PROFESSIONAL ENGINEER
MATTHEW J. METTLER
PE-4726
DATE 5/9/2022
NORTH DAKOTA

LONG LAKE NWR **STRUCTURAL ROOF FRAMING PLAN** NEW HEADQUARTERS AND VISITOR CENTER					SUB-SHEET S401
DESIGNED SK	DRAWN VG	CHECKED MM	DATE 2022.05.09		SHEET 35 OF 66

c:\dcwt_pw\d0394558\R20_27085_01_LongLake_BSM.rvt

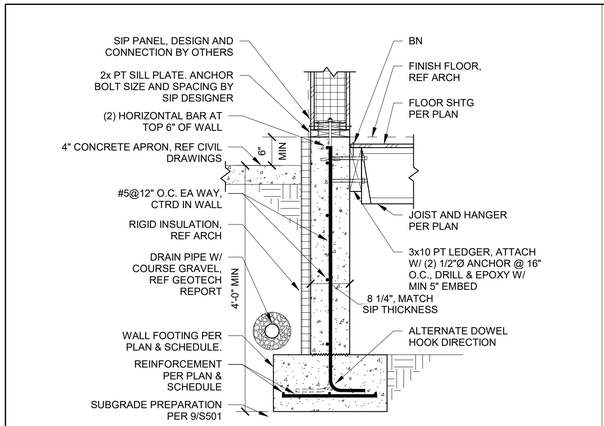

A S501 EXTERIOR WALL CONNECTION

3/4" = 1'-0"

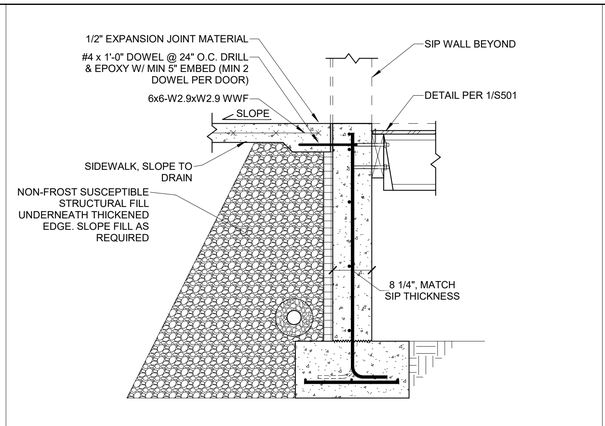

B S501 DOORWAY CONNECTION

3/4" = 1'-0"

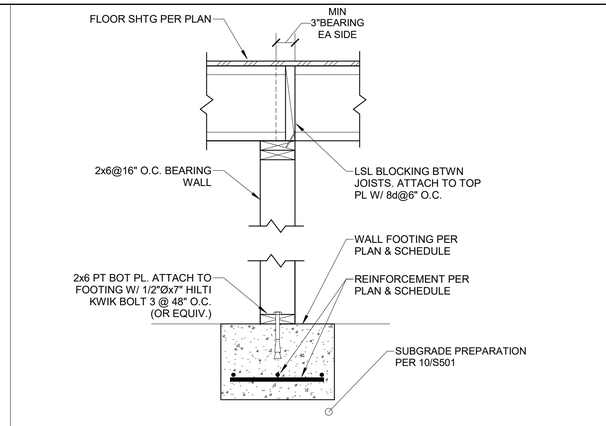

C S501 CRAWLSPACE BEARING WALL

1" = 1'-0"

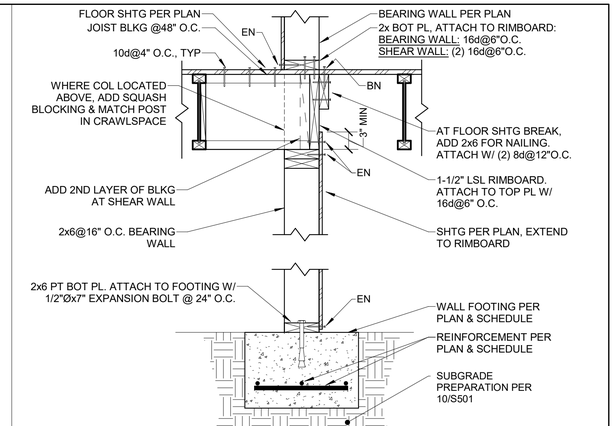

D S501 PARALLEL JOIST CONDITION

1" = 1'-0"

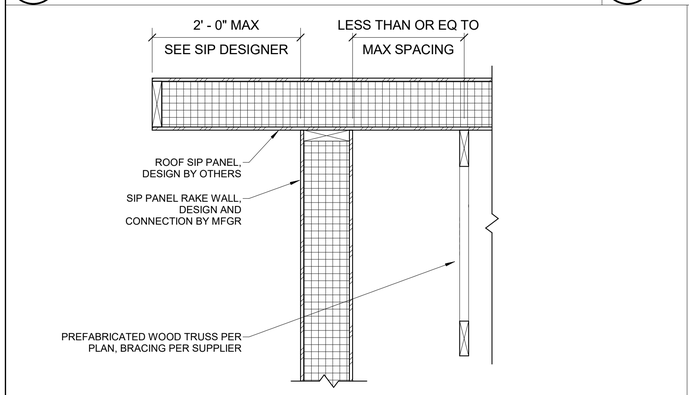

E S501 ROOF GABLE DETAIL

1" = 1'-0"

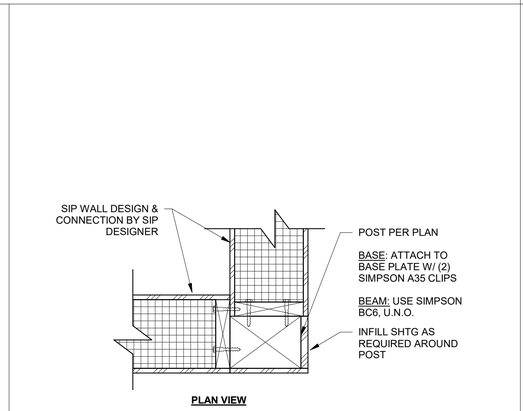

F S501 CORNER COLUMN CONNECTION

1 1/2" = 1'-0"

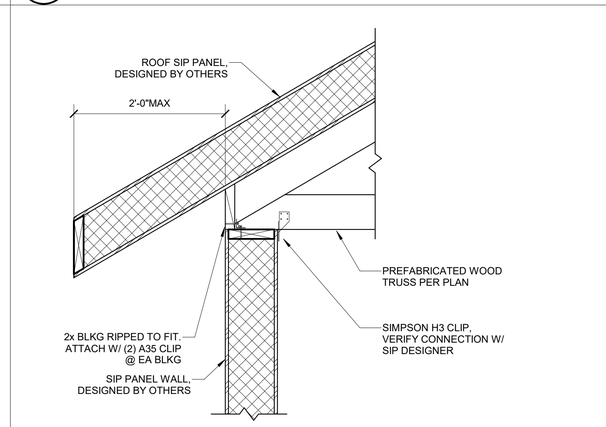

G S501 ROOF TRUSS BEARING ON SIP PANEL

1" = 1'-0"

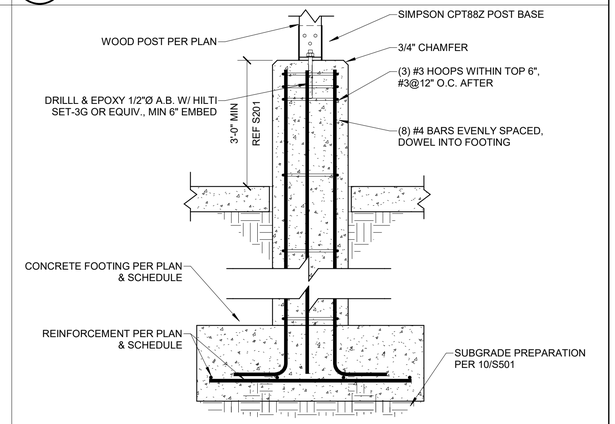

H S501 EXTERIOR COLUMN CONNECTION

1" = 1'-0"

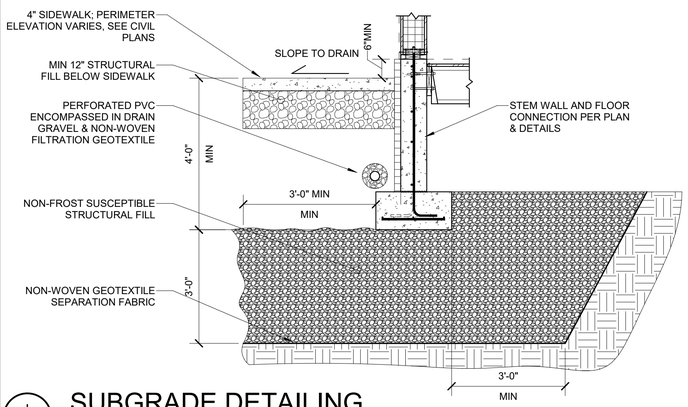

I S501 SUBGRADE DETAILING

1/2" = 1'-0"

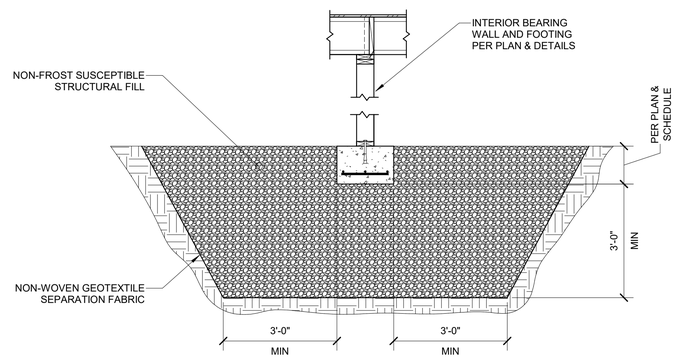

J S501 SUBGRADE DETAIL INTERIOR

1/2" = 1'-0"

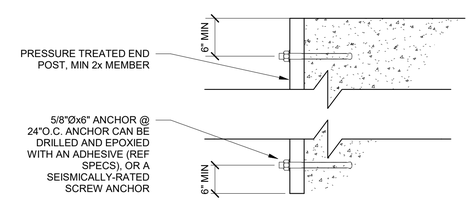

K S501 WOOD TO CONCRETE CONNECTION

1 1/2" = 1'-0"

REGISTERED PROFESSIONAL ENGINEER
MATTHEW J. METTLER
PE - 4725
DATE 5/9/2022
NORTH DAKOTA

LONG LAKE NWR					SUB-SHEET
STRUCTURAL SECTIONS AND DETAILS NEW HEADQUARTERS AND VISITOR CENTER					S501
DESIGNED SK	DRAWN VG	CHECKED MM	DATE 2022.05.09		SHEET 36 OF 66

c:\dowl_pw\d0394558\R20_27085_01_LongLake_BSM.rvt

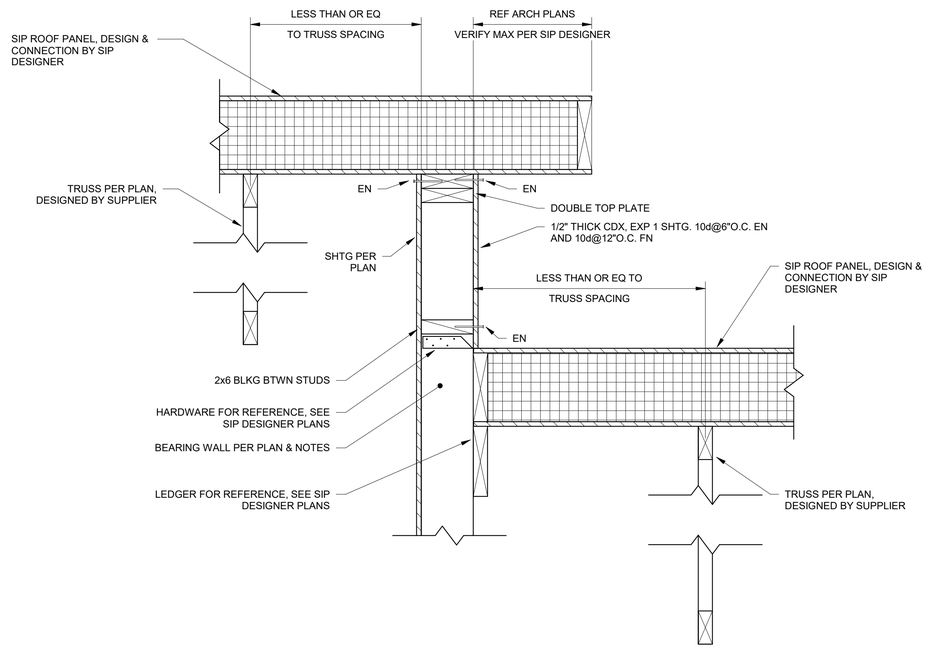

L
S502

ROOF TRANSITION DETAIL

1 1/2" = 1'-0"

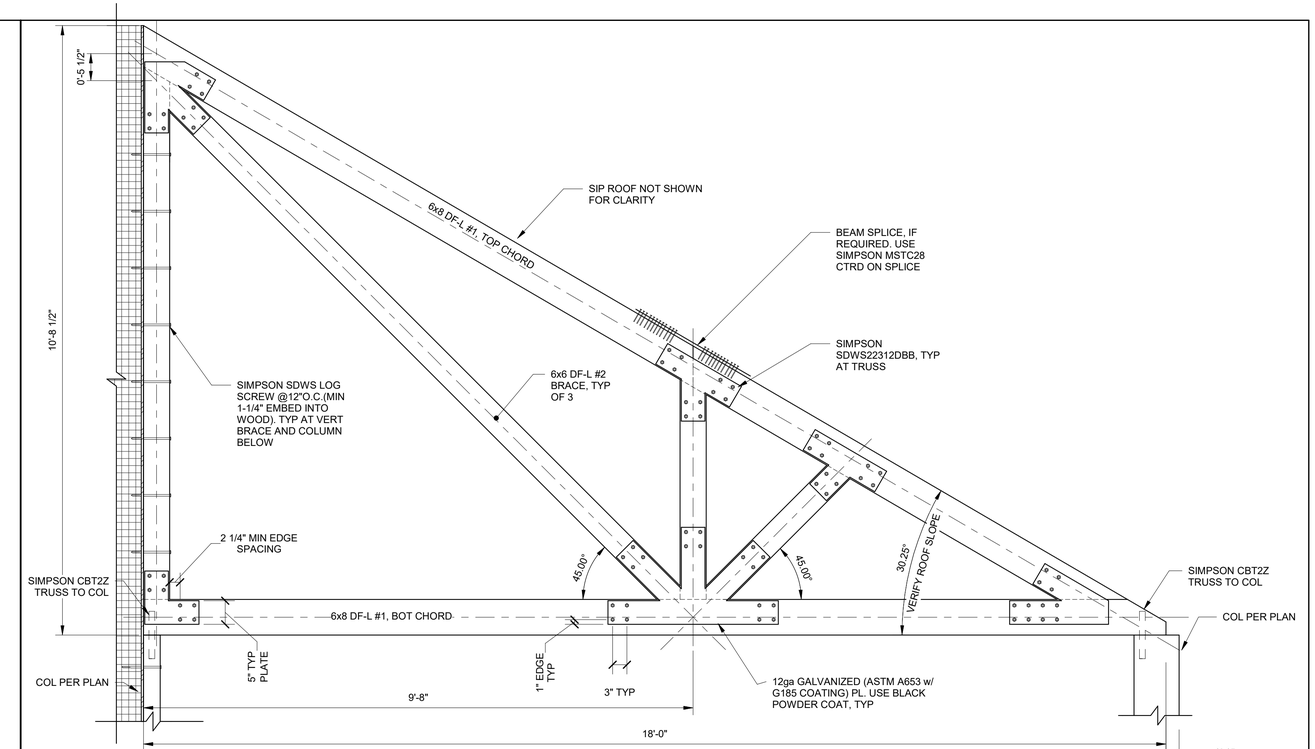

M
S502

WEST PATIO EXPOSED TRUSS

3/4" = 1'-0"

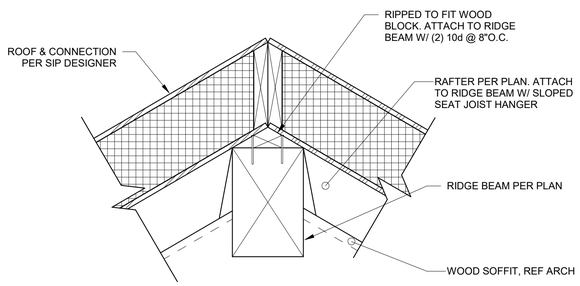

N
S502

RIDGE BEAM CONNECTION

1 1/2" = 1'-0"

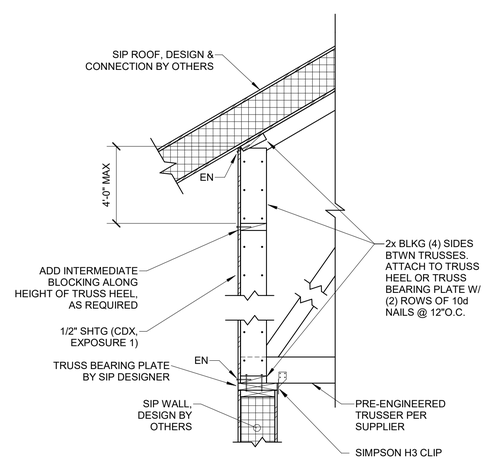

O
S502

EXTERIOR BEARING WALL DETAIL

3/4" = 1'-0"

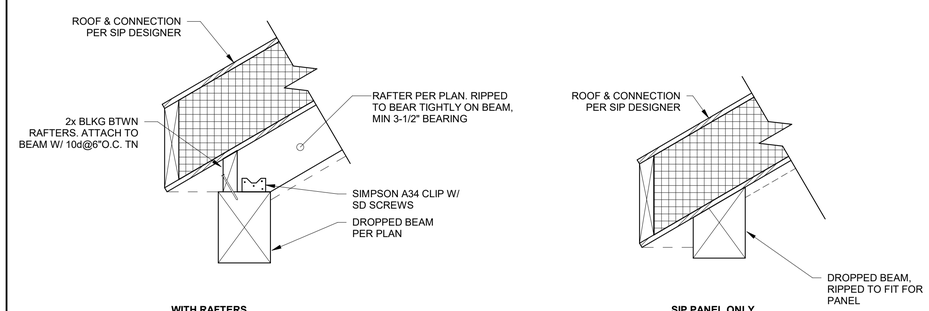

P
S502

RAFTER TO DROPPED BEAM CONNECTION

1 1/2" = 1'-0"

REGISTERED PROFESSIONAL ENGINEER
MATTHEW J. METTLER
PE-14551
DATE 5/9/2022
NORTH DAKOTA

c:\dowl_pw\d0394558\R20_27085_01_LongLake_BSM.rvt

LONG LAKE NWR **STRUCTURAL SECTIONS AND DETAILS** NEW HEADQUARTERS AND VISITOR CENTER					SUB-SHEET S502
DESIGNED SK	DRAWN VG	CHECKED MM	DATE 2022.05.09		SHEET 37 OF 66

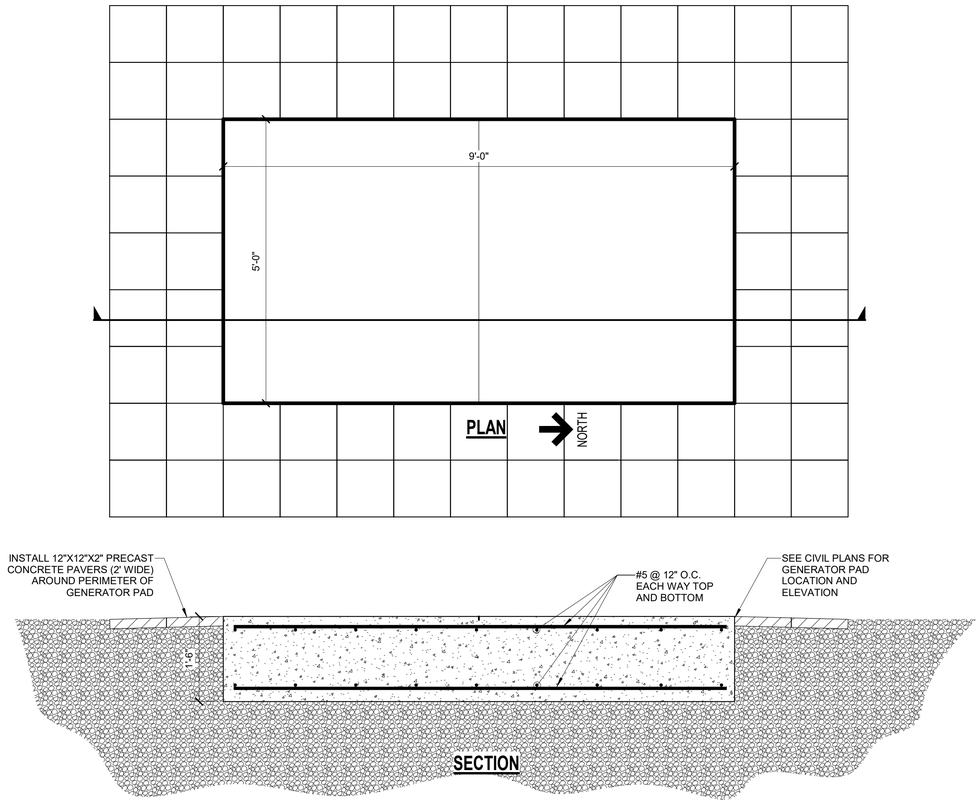

Q
S503

GENERATOR PAD

3/4" = 1'-0"

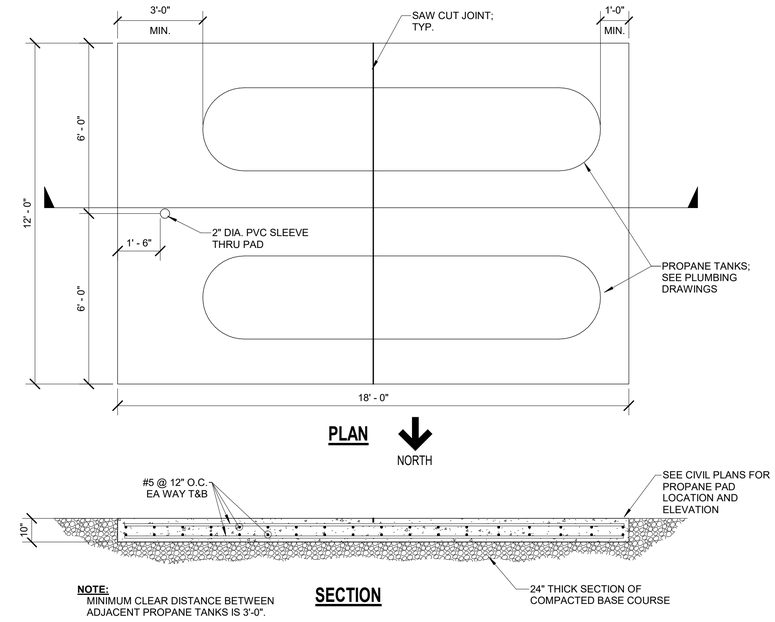

NOTE:
MINIMUM CLEAR DISTANCE BETWEEN ADJACENT PROPANE TANKS IS 3'-0".

R
S503

PROPANE PAD

3/8" = 1'-0"

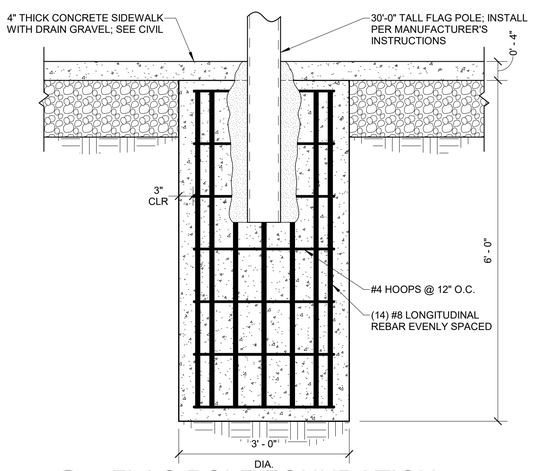

3
S503

FLAG POLE FOUNDATION

3/4" = 1'-0"

REGISTERED PROFESSIONAL ENGINEER
MATTHEW J. METTLER
PE-14564
DATE 5/9/2022
NORTH DAKOTA

c:\dowl_pw\d0394558\R20_27085_01_LongLake_BSM.rvt

LONG LAKE NWR **STRUCTURAL SECTIONS AND DETAILS** NEW HEADQUARTERS AND VISITOR CENTER					SUB-SHEET S503
DESIGNED SK	DRAWN VG	CHECKED MM	DATE 2022.05.09		SHEET 38 OF 66

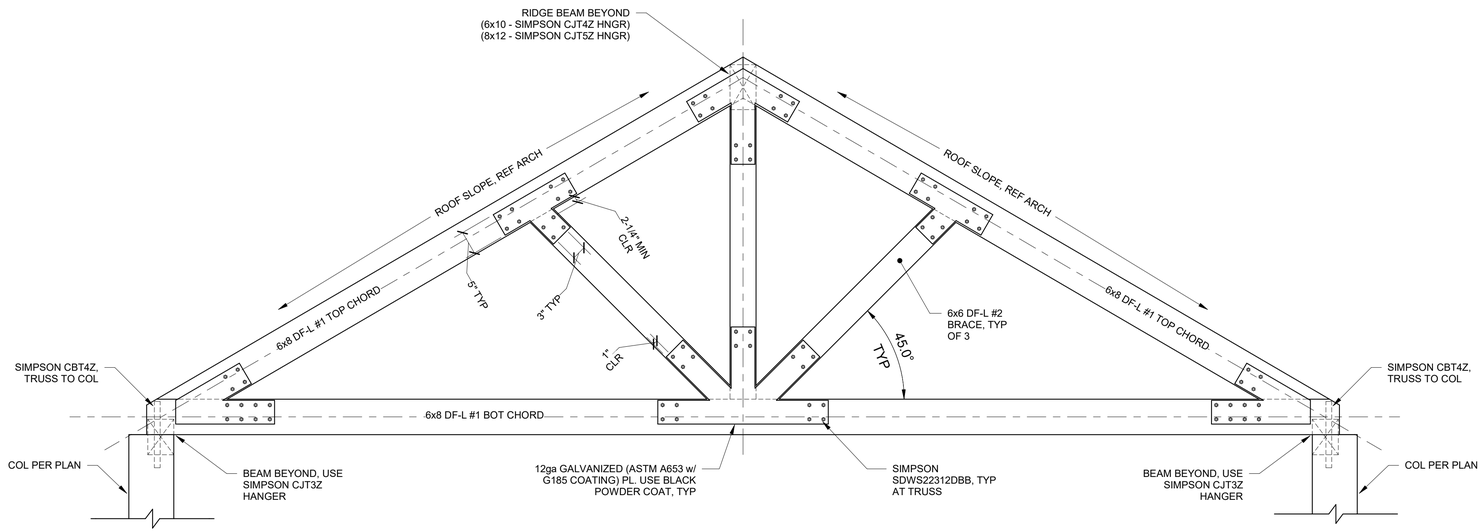

NOTE:
SEE ROOF FRAMING PLAN
FOR TRUSS SPAN LENGTH

T
S504

TYPICAL ENTRANCE TRUSS

3/4" = 1'-0"

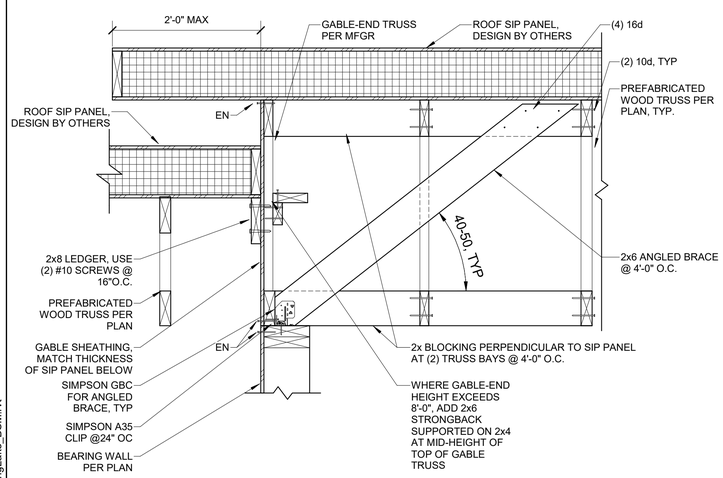

U
S504

GABLE-END TRUSS DETAIL

1" = 1'-0"

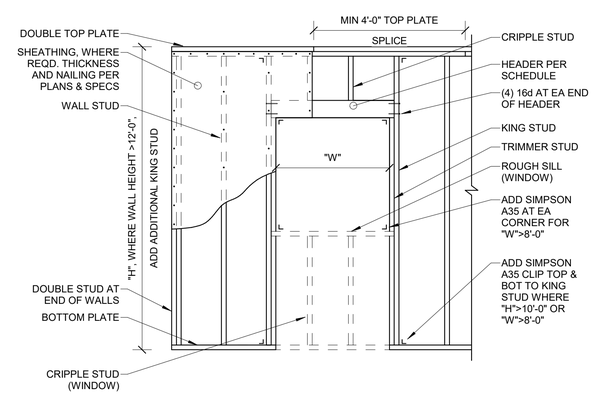

HEADER SCHEDULE

"W" OPENING	TYPE	TRIMMERS	KINGS
<4'-0"	(2)-2x6	1	1
4'-0" - 6'-0"	(2)-2x8	1	1
6'-0" - 8'-0"	(3)-2x10	2	2

NOTE: USE THESE SIZES WHEN NOTHING IS NOTED ON PLAN

V
S504

TYPICAL HEADER DETAIL

1/2" = 1'-0"

REGISTERED PROFESSIONAL ENGINEER
MATTHEW J. METTLER
PE - ARCH
DATE 5/9/2022
NORTH DAKOTA

c:\dowl_pwt\d0394558\R20_27085_01_LongLake_BSM.rvt

LONG LAKE NWR					SUB-SHEET
STRUCTURAL SECTIONS AND DETAILS					S504
NEW HEADQUARTERS AND VISITOR CENTER					
DESIGNED SK	DRAWN VG	CHECKED MM	DATE 2022.05.09		SHEET 39 OF 66

DX FAN COIL SCHEDULE (R-410A)

PLAN CODE	MANUF.	MODEL	SUPPLY FAN		DX COOLING DATA			HOT WATER HEATING COIL DATA (35% PROP GLYCOL)										ELECTRICAL DATA					FRESH AIR CFM MIN	FILTER	COMMENTS
			CFM MAX	ESP	TOT./ SENS. MBH	EAT DB/WB	LAT DB/WB	HEATING CFM	TOT. MBH	EAT DB	LAT DB	ROWS/FPI	EWT °F	LWT °F	GPM	WATER PRESS DROP, FT H2O	AIR PRESSURE DROP, IN W.C.	RPM	MCA/MOCP	HP	VOLT	PHASE			
FC-1	AAON	V3-CRB-2-0-16 2C-12F	4000	3.0"	114.23 / 106.10	79.3/63.2	50.6/48.5	2075	135	23.5	95.5	2 / 12	150	130	17	0.8	0.14	2750	23 / 40	8.0	240	3	850	MERV8/13	HOT WATER/DX FAN COIL

NOTES:
1. PROVIDE WITH SINGLE POINT ELECTRICAL CONNECTION AND FACTORY DISCONNECT.
2. PROVIDE FLEX CONNECTIONS ON ALL DUCT CONNECTIONS.
3. SEE 3/M304 FOR DETAIL.
4. PROVIDE MIXING BOX WITH DAMPERS FOR OPERATION. ACTUATORS BY T.C.
5. COOLING COIL TO BE 2-CIRCUIT TO MATCH CONDENSING UNIT

CONDENSING UNIT SCHEDULE (R-410A)

PLAN CODE	MANUFACTURER	UNIT SERVED	MODEL NUMBER	CIRCUITS	COMPRESSORS	TOTAL CAP. MBH	AMB TEMP	COND FAN HP EA	ELECTRICAL			REMARKS
									VOLT	PH	MCA/MOCP	
CU-1	AAON	FC-1	CFA-011-B-A-1-DA00K	2	2	120.6	93	0.33	240	1	64/90	SEE NOTES

NOTES:
1. PROVIDE REFRIGERANT LINE SET. SIZE PER MANUFACTURER RECOMMENDATIONS.
2. PROVIDE ALL CONDENSING UNITS WITH THE FOLLOWING OPTIONS:
   - A. FILTER DRIERS AND SIGHT GLASS
   - B. HAIL GUARDS
   - C. COMPRESSOR SOUND BLANKET INSTALLED BY CONTRACTOR
   - D. TXV VALVES
3. PROVIDE ALL REFRIGERANT LINE PENETRATIONS THROUGH WALL WITH SLEEVE AND CAULK.
4. DISCONNECT BY E.C. COORDINATE WITH G.C.
5. COMPRESSOR TO BE VARIABLE CAPACITY SCROLL.

GLYCOL NOTES

THE HOT WATER SYSTEMS SHALL BE CHARGED WITH A 35% SOLUTION OF GLYCOL. REFER TO THE PROJECT SPECIFICATIONS FOR ADDITIONAL REQUIREMENTS.

ACCESS DOORS

PROVIDE DUCT ACCESS DOORS FOR ALL MOTORIZED DAMPERS AND LOUVERS TO ALLOW FOR ADEQUATE MAINTENANCE ACCESS

SITE ELEVATION

THE ELEVATION AT LONG LAKE HEADQUARTERS AND VISITOR CENTER, IS APPROXIMATELY 1686 FEET ABOVE SEA LEVEL. MAKE ALL EQUIPMENT SELECTIONS WITH THIS ELEVATION DERATE IN MIND.

EXPOSED PIPE INSULATION JACKETING

1. EXPOSED DUCTWORK TO BE SPIRAL WITH PAINTABLE FINISH. PAINTING BY G.C. COLOR SELECTION BY ARCH.
2. ANY PIPING EXPOSED TO VIEW SHALL BE JACKETED WITH A PAINTABLE PVC JACKET.

EXCEPTIONS: MECHANICAL ROOM, JANITOR CLOSETS.

VFD APPLICATION

EQUIPMENT	FUNCTION	MANUFACTURER	MODEL NUMBER	HP	ELECTRICAL	SUPPLIED BY
VFD-1	PHASE CONVERSION FOR FC-1	DANFOSS	DANFOSS-FC100-B2-IP21SWITCH-1	10	240V / 1 PH INPUT	T.C.

NOTES:
1. T.C. PROVIDED VFD. E.C. TO MOUNT AND PROVIDE POWER/WIRING.
2. PROVIDE WITH INTERGRAL DISCONNECT.

CONTROL NOTES

1. TEMPERATURE CONTROL CONTRACTOR TO PROVIDE BOX AND CONDUIT TO ACCESSIBLE CEILING SPACE FOR EACH THERMOSTAT.
2. PROVIDE A DDC CONTROL SYSTEM WITH WEB BASED INTERFACE FOR HVAC SYSTEM CONTROL.
3. TEMPERATURE CONTROL CONTRACTOR TO PROVIDE AND WIRE RADIANT FLOOR SLAB TEMPERATURE SENSORS FOR RADIANT FLOOR HEAT SYSTEM OPERATION.

DUCTWORK CONSTRUCTION SCHEDULE

INSULATED DUCTWORK INCLUDES:
- ALL INTERIOR SUPPLY DUCTWORK
- ALL EXHAUST DUCTWORK FROM THE BACKDRAFT DAMPER TO THE BUILDING EXTERIOR.
- ALL FRESH AIR DUCTWORK AND COMBUSTION AIR DUCTWORK

UNINSULATED/UNLINED DUCTWORK INCLUDES:
- ALL OTHER INTERIOR EXHAUST DUCTWORK
- ALL INTERIOR RETURN DUCTWORK - EXCEPT WHERE NOTED BELOW.

LINED DUCTWORK INCLUDES:
- ALL TRANSFER DUCTWORK
- SUPPLY AND RETURN DUCTWORK WITHIN 20' OF FC-2. NOTE: LINED SUPPLY TO BE PROVIDED WITH PERFORATED METAL LINER.

NOTE: INSULATED FLEXIBLE DUCTWORK MAY BE USED AT THE CONTRACTOR'S OPTION FOR A MAXIMUM OF 5 FT. LENGTH TO EACH DIFFUSER/REGISTER/ GRILLE.

MECHANICAL SHEET LIST

MECHANICAL SYMBOLS LEGEND

AIR TERMINALS, EQUIPMENT & SPECIALTIES

NEW EQUIPMENT
EXISTING TO REMAIN
SUPPLY AIR TERMINAL (NEW, EXIST., DEMO.)
RETURN AIR TERMINAL (NEW, EXIST., DEMO.)
EXHAUST AIR TERMINAL (NEW, EXIST., DEMO.)
LINEAR SLOT AIR TERMINAL
PUMP
P.O.D.C. - POINT OF DISCONNECTION
P.O.C. - POINT OF CONNECTION

EQUIPMENT TAG
EF — TYPE OF EQUIPMENT; EQUIPMENT NUMBER (REFER TO SCHEDULE)

DIFFUSER/GRILLE TAG
SD-1 / 22 — AIR TERMINAL NUMBER; AIR TERMINAL CFM (REFER TO SCHEDULE)

WALL LOUVER
SIDEWALL AIR TERMINAL
T — T'STAT. (ELEC./PNEU.)
S — SWITCH

DUCTWORK & ACCESSORIES

NEW DUCTWORK
EXISTING DUCTWORK TO REMAIN
DUCT BREAK
UP — RISE IN DUCTWORK
DN — FALL IN DUCTWORK
FD — FIRE DAMPER
SD — SMOKE DAMPER
F/SD — FIRE/SMOKE DAMPER
BDD — BACKDRAFT DAMPER
VD — MANUAL VOLUME DAMPER
MOTORIZED DAMPER

18x1 — INSIDE CLEAR DUCT SIZE: FIRST FIGURE INDICATED IS SIDE OF DUCT SHOWN
DUCTWORK END CAP
FLEXIBLE DUCTWORK
SQUARE ELBOW UP SUPPLY/RETURN/EXH.
SQUARE ELBOW DN SUPPLY/RETURN/EXH.
ROUND ELBOW UP SUPPLY/RETURN/EXH.
ROUND ELBOW DN SUPPLY/RETURN/EXH.
SQUARE DIFFUSERS SUPPLY/RETURN/EXH.
ROUND DIFFUSERS FULL / HALF
INDICATED AIR FLOW SUPPLY / RETURN
DUCT REDUCER

DUCTWORK SHADING

SUPPLY AIR
RETURN AIR
EXHAUST AIR
OUTSIDE AIR

HVAC/HYDRONIC PIPING

HWS — HOT WATER SUPPLY
HWR — HOT WATER RETURN
CD — CONDENSATE DRAIN
RS — REFRIGERANT SUCTION
RL — REFRIGERANT LIQUID

THIS IS A STANDARDIZED SYMBOLS LEGEND, ALL SYMBOLS SHOWN MAY NOT APPEAR ON OR WITHIN THIS SET OF CONTRACT DOCUMENTS.

ACE INC
ASSOCIATED • CONSTRUCTION • ENGINEERING
2040 HARNISH BLVD.
BILLINGS, MT 59102
406-245-0136
ACE JOB 21BL5444

REGISTERED PROFESSIONAL ENGINEER
TODD A. MELING
PE-8313
DATE 2022.05.09
NORTH DAKOTA

LONG LAKE NWR

MECHANICAL COVER SHEET

NEW HEADQUARTERS AND VISITOR CENTER

SUB-SHEET M001

DESIGNED	DRAWN	CHECKED	DATE	DRAWING NO.	SHEET
AS	TA	AS	2022.05.09		40 OF 66

GRILLE - REGISTER - DIFFUSER SCHEDULE

PLAN CODE	MANUFACTURER	MODEL NUMBER	FUNCTION	FACE SIZE	NECK SIZE	MATERIAL	FINISH	CFM	VOLUME DAMPER	REMARKS
CD-2	PRICE	SMCD	CEILING SUPPLY	12"x12"	6"	ALUMINUM	WHITE	SEE PLANS	IN DUCT	4-WAY THROW, TOOL FREE RECONFIGURATION
CD-6	PRICE	SMCD	CEILING SUPPLY	12"x12"	8"	ALUMINUM	WHITE	SEE PLANS	IN DUCT	4-WAY THROW, TOOL FREE RECONFIGURATION
CD-8	PRICE	SMCD	CEILING SUPPLY	24"x24"	8"	ALUMINUM	WHITE	SEE PLANS	SEE PLANS	4-WAY THROW, TOOL FREE RECONFIGURATION
CD-10	SMCD	SMCD	CEILING SUPPLY	24"x24"	10"	ALUMINUM	WHITE	SEE PLANS	SEE PLANS	4-WAY THROW, TOOL FREE RECONFIGURATION
RG-2	PRICE	PDDR	CEILING RETURN	12"x12"	6"	ALUMINUM	WHITE	SEE PLANS	IN DUCT	ARCHITECTURAL PERFORATED FACE RETURN GRILLE
RG-8	PRICE	PDDR	CEILING RETURN	24"x24"	8"x8"	ALUMINUM	WHITE	SEE PLANS	IN DUCT	ARCHITECTURAL PERFORATED FACE RETURN GRILLE
RG-10	PRICE	PDDR	CEILING RETURN	24"x24"	10"x10"	ALUMINUM	WHITE	SEE PLANS	IN DUCT	ARCHITECTURAL PERFORATED FACE RETURN GRILLE
RG-14	PRICE	PDDR	CEILING RETURN	24"x24"	14"x14"	ALUMINUM	WHITE	SEE PLANS	--	ARCHITECTURAL PERFORATED FACE RETURN TRANSFER GRILLE
RG-18	PRICE	PDDR	CEILING RETURN	24"x24"	18"x18"	ALUMINUM	WHITE	SEE PLANS	--	ARCHITECTURAL PERFORATED FACE RETURN TRANSFER GRILLE
EG-18	PRICE	PDDR	CEILING RELIEF	24"x24"	20"x20"	ALUMINUM	WHITE	SEE PLANS	--	ARCHITECTURAL PERFORATED FACE RELIEF GRILLE
FG-1	PRICE	LBPH	FLOOR GRILLE	12"x6"	--	ALUMINUM	ALUMINUM	SEE PLANS	OBD IN GRILLE	FLOOR GRILLE, COORDINATE WITH FLOOR FRAMING
SEG-1	PRICE	60	SIDEWALL EXHAUST GRILLE	18"x10"	18"x10"	ALUMINUM	WHITE	SEE PLANS	OBD IN GRILLE	SIDEWALL EXHAUST GRILLE
DL-1	PRICE	HCD	SIDEWALL SUPPLY	18"x10"	--	ALUMINUM	WHITE	SEE PLANS	OBD IN GRILLE	SUPPLY DRUM LOUVER
SRG-1	PRICE	HCD	SIDEWALL RETURN	18"x10"	--	ALUMINUM	WHITE	SEE PLANS	OBD IN GRILLE	RETURN DRUM LOUVER
SRG-2	PRICE	60	SIDEWALL RETURN	50"x30"	50"x30"	ALUMINUM	WHITE	SEE PLANS	--	SIDEWALL RETURN GRILLE
SRG-3	PRICE	60	SIDEWALL RETURN	24"x20"	24"x20"	ALUMINUM	WHITE	SEE PLANS	--	SIDEWALL RETURN GRILLE

NOTES:
1. PROVIDE ALL DUCT TRANSITIONS TO AND FROM GRILLES/REGISTERS/DIFFUSERS AS REQUIRED.
2. ALL GRILLE AND REGISTER COLORS TO BE COORDINATED WITH ARCHITECT.
3. CONTRACTOR TO VERIFY EXACT BUILDING CONSTRUCTION, CEILING, AND FLOOR TYPES AND PROVIDE THE CORRECT FRAMES FOR ALL AIR DIFFUSION PRODUCTS AS REQUIRED.
4. PROVIDE MANUAL VOLUME DAMPERS FOR CONNECTION TO ALL G/R/D'S. SEE DETAIL 2/M302.
5. SEE DRAWING FOR FURTHER G/R/D REQUIREMENTS.

CONDENSING FIRE TUBE BOILER SCHEDULE (35% PROPYLENE GLYCOL)

PLAN CODE	MANUFACTURER	MODEL NUMBER	BOILER TURNDOWN	MBH INPUT	MAX MBH OUTPUT	DESIGN GPM	BOILER MIN FLOW	EWT/LWT	W.P.D.	FLUE SIZE	C.A. SIZE	POWER	REMARKS
B-1, B-2	LOCHINVAR	WHB285N	10:1	285	260	26	2.6	130/150	2.42'	3"	3"	120V 1 PHASE	FLOOR MOUNTED FIRE-TUBE BOILER, SEE 1/M304 FOR DETAIL.

NOTES:
1. FURNISH WITH BOILER CONTROL PANEL. INCLUDING BOILER LEAD/LAG AND STAGING CONTROL. PROVIDE WITH FLOW SWITCH AND BACNET INTERFACE FOR CONNECTION TO BMS.
2. PROVIDE LP GAS KIT, 50 PSI RELIEF VALVE, DIRECT VENT SEALED COMBUSTION, CONCENTRIC VENT KIT, 10 YEAR LIMITED WARRANTY, CONDENSTATE NEUTRALIZATION KIT.
3. LOW AND HIGH PRESSURE GAS SWITCH WITH MANUAL RESET AND LOW WATER CUTOFF WITH MANUAL RESET & TEST. G.C. TO PROVIDE HOUSEKEEPING PAD FOR BOILER.
4. PROVIDE A SPARE IGNITER.
5. PROVIDE BOILER WITH MANUFACTURER PROVIDED BOILER CIRCULATION PUMP.
6. EACH BOILER IS SIZED FOR 89% OF LOAD.

PUMP SCHEDULE

PLAN CODE	MANUFACTURER	FUNCTION	MODEL NUMBER	RPM	GPM	FT OF HD	ELECTRICAL DATA			EFF	REMARKS
							HP	VOLT	PH		
HWP-1,2	TACO	HEATING WATER SYSTEM PUMPS	VR25H	4900	35	50	1550 W	240	1	31%	HEATING HOT WATER SYSTEM PUMPS. HIGH EFFICIENCY ECM PUMP WITH BACNET INTERFACE. 0-10 VDC SIGNAL
BP-1,2	GRUNDFOS	BOILER CIRCULATOR PUMPS	UPMXL 25-124	N/A	19	15	120 W	120	1	---	PROVIDE WITH EACH BOILER FROM MANUFACTURER
ZP-1,2,3,4,5	TACO	RADIANT ZONE CIRCULATOR PUMPS	0011	3250	SEE FLOOR HEAT SYSTEM SCHEDULE	31	1/8	120	1	---	RADIANT ZONE CIRCULATOR PUMPS

NOTES:
1. PROVIDE GAUGES ACROSS PUMPS FOR BALANCING PURPOSES.
2. SEE 3/M303 FOR PUMP DETAIL.

AIR SEPARATOR SCHEDULE

PLAN CODE	MANUFACTURER	MODEL NUMBER	GPM	PIPE SIZE	REMARKS
AS-1	TACO	4902AD	26	2"	AIR/DIRT SEPARATOR

EXPANSION TANK SCHEDULE

PLAN CODE	MANUFACTURER	MODEL NUMBER	TOTAL VOLUME	ACCEPTANCE VOLUME	PRECHARGE PRESSURE
ET-1	TACO	CA-90	23 GAL	23 GAL	15 PSI

ACE INC
ASSOCIATED • CONSTRUCTION • ENGINEERING
2040 HARNISH BLVD.
BILLINGS, MT 59102
406-245-0136
ACE JOB 21BL5444

REGISTERED PROFESSIONAL ENGINEER
TODD A. MELING
PE-8312
DATE 2022.05.09
NORTH DAKOTA

LONG LAKE NWR

MECHANICAL SCHEDULES

NEW HEADQUARTERS AND VISITOR CENTER

SUB-SHEET M002

DESIGNED	DRAWN	CHECKED	DATE	DRAWING NO.	SHEET
AS	TA	AS	2022.05.09		41 OF 66

EXHAUST FAN SCHEDULE

PLAN CODE	MANUFACTURER	MODEL NUMBER	CFM	ESP	RPM	DRIVE TYPE	ELECTRICAL DATA				STATIC EFFICIENCY	SONES	WEIGHT	CONTROL NOTES	AREA SERVED	REMARKS
							HP	VOLT	FLA	PH						
EF-1	PANASONIC	FV-0511VF1	75	0.5	1350	DIRECT	13W	120	0.3	1	N/A	1.5	10 LBS	WIRED TO WALL SWITCH	RESTROOM 103	CEILING MOUNTED EXHAUST FAN
EF-2	PANASONIC	FV-0511VF1	75	0.5	1350	DIRECT	13W	120	0.3	1	N/A	1.5	10 LBS	WIRED TO WALL SWITCH	RESTROOM 104	CEILING MOUNTED EXHAUST FAN
EF-3	PANASONIC	FV-0511VF1	75	0.5	916	DIRECT	13W	120	0.25	1	N/A	1.5	10 LBS	RUNS DURING OCCUPIED HOURS	LOCKER 118	CEILING MOUNTED EXHAUST FAN
EF-4	PANASONIC	FV-0511VF1	75	0.5	1350	DIRECT	13W	120	0.3	1	N/A	1.5	10 LBS	WIRED TO WALL SWITCH	RESTROOM 123	CEILING MOUNTED EXHAUST FAN
EF-5	PANASONIC	FV-0511VF1	50	0.5	1350	DIRECT	13W	120	0.3	1	N/A	1.5	10 LBS	RUNS CONTINUOUSLY	JANITOR CLOSET 124	CEILING MOUNTED EXHAUST FAN
EF-6	COOK	GN-622	350	0.4	1600	DIRECT	121W	120	2.1	1	54%	3	26 LBS	RUNS CONTINUOUSLY	MECH ROOM AND CRAWLSPACE	INLINE FAN IN MECHANICAL ROOM

NOTES:
1. PROVIDE ALL FANS WITH BACKDRAFT DAMPER.
2. SEE 3/M302 FOR CEILING EXHAUST FAN DETAIL.
3. PROVIDE ALL DIRECT DRIVE FANS WITH FACTORY WIRED SPEED CONTROLLER AND FACTORY DISCONNECT.
4. PROVIDE ROOF OR WALL EXHAUST OUTLET FOR EACH FAN.

LOUVER SCHEDULE

PLAN CODE	MANUFACTURER	MODEL NUMBER	FUNCTION	SIZE	APD	MATERIAL	FINISH	CFM	DAMPER	LOCATION	REMARKS
L-1	RUSKIN	ELF6375DX	FC-1 OA INTAKE	53"x36"	0.04"	ALUMINUM	KYNAR	3600	AT AHU	SOUTH MECH ROOM WALL	SEE NOTES
L-2	RUSKIN	ELM6375DX	FC-1 RELIEF	30"x30"	0.05"	ALUMINUM	KYNAR	1800	24V MOTORIZED	EAST EXTERIOR WALL	SEE NOTES
L-3	RUSKIN	ELM6375DX	FC-1 RELIEF	30"x30"	0.05"	ALUMINUM	KYNAR	1800	24V MOTORIZED	EAST EXTERIOR WALL	SEE NOTES

NOTES:
1. KYNAR FINISH. COLOR SELECTION BY ARCHITECT.
2. PROVIDE WITH BIRDSCREEN.
3. MINIMUM 54% FREE AREA, DRAINABLE HEAD, WELDED CONSTRUCTION.
4. ALUMINUM CONSTRUCTION, 6" DEPTH.
5. WATER PENETRATION @1000 FPM

AUTOMATIC GLYCOL FEEDER SCHEDULE

PLAN CODE	MANUFACTURER	MODEL NUMBER	GALLON CAPACITY	PRESSURE RANGE	MAKEUP CAPACITY	ELECTRICAL DATA		REMARKS
						VOLT	HP	
AGF-1	WESSELS	G-18	18	12-60 PSIG	1.0 GPM	120	1/3	SEE NOTES

NOTES:
1. PROVIDE UNIT WITH FULLY AUTOMATED SYSTEM INCLUDING LOW LEVEL CUTOFF AND ALARM, ISOLATION VALVES, STRAINER, PRESSURE TANK WITH PRESSURE CONTROL, PRESSURE REDUCING VALVE AND GAUGE.
2. PROVIDE UNIT WITH LID DESIGNED TO ACCOMDATE RELIEF VALVE PIPING. PROVIDE MAGNETIC STARTER, 110V MOTOR AND CONTROLS WITH CORD AND PLUG. WIRE TO DDC SYSTEM FOR MONITORING. COORDINATE OUTLET FOR POWER WITH G.C.

CABINET UNIT HEATER SCHEDULE

PLAN CODE	MANUFACTURER	MODEL NUMBER	STYLE	LOCATION	PERFORMANCE								ELECTRICAL DATA			
					AIR SIDE			MIN MBH								
					CFM/HIGH SPEED	EAT °F	LAT °F	MIN MBH	GPM	EAT °F	LWT °F	P.D.	HP	VOLT	FLA	PH
CUH-1	TRANE	FFBB0201AAYA	FLOOR-MOUNTED	ENTRY VESTIBULE	200	60	104	8.8	0.5	150	120	0.71 FT	1/10	120	2.75	1

NOTES:
1. UNITS TO BE PROVIDED WITH UNIT MOUNTED DISCONNECT, SUSPENSION OR MOUNTING HARDWARE, WALL GASKET, T.C. TO PROVIDE CONTROL VALVES AND THERMOSTAT/SENSOR. PROVIDE STANDARD COLOR SELECTION CHART FOR ARCHITECTURAL SELECTION. SEE DETAIL X/MXXX FOR CABINET UNIT HEATER DETAIL.
2. PROVIDE AND INSTALL PER MANUFACTURER'S INSTRUCTIONS. PROVIDE WITH VALVES AND ACCESSORIES PER DETAIL 6/M302.

ACE INC
ASSOCIATED • CONSTRUCTION • ENGINEERING
2040 HARNISH BLVD.
BILLINGS, MT 59102
406-245-0136
ACE JOB 21BL5444

REGISTERED PROFESSIONAL ENGINEER
TODD A. MELING
PE-8317
DATE 2022.05.09
NORTH DAKOTA

LONG LAKE NWR

MECHANICAL SCHEDULES

NEW HEADQUARTERS AND VISITOR CENTER

SUB-SHEET M003

DESIGNED	DRAWN	CHECKED	DATE	DRAWING NO.	SHEET
AS	TA	AS	2022.05.09		42 OF 66

VARIABLE AIR VOLUME UNIT SCHEDULE

PLAN CODE	MFR	MODEL NUMBER	INLET SIZE (IN. DIA)	100% CFM	MIN CFM	HOT WATER COIL (35% GLYCOL)									MAX TOTAL S.P. @ 100% CFM IN. H20	CONTROL VALVE	REMARKS
						HEATING CAPACITY (MBH)	AIR SIDE				WATER SIDE						
							CFM	E.A.T.	L.A.T.	ROWS	GPM	E.W.T.	L.W.T.	FLUID P.D. (FT)			
VAV 1	PRICE	SDV5000	10"	810	405	18.1	405	55	100	2	2.5	150	120	<10'	0.25"	2-WAY	SEE NOTES
VAV 2	PRICE	SDV5000	12"	750	375	18.4	375	55	100	2	2.6	150	120	<10'	0.25"	2-WAY	SEE NOTES
VAV 3	PRICE	SDV5000	14"	950	475	23.5	475	55	100	2	3.4	150	120	<10'	0.25"	3-WAY	SEE NOTES
VAV 4	PRICE	SDV5000	12"	870	435	21.5	435	55	100	2	3.1	150	120	<10'	0.25"	2-WAY	SEE NOTES
VAV 5	PRICE	SDV5000	5"	155	0	0	NO COIL	N/A	NO COIL	N/A	NO COIL	N/A	N/A	<10'	0.25"	NONE	SEE NOTES
VAV 6	PRICE	SDV5000	12"	770	385	19	385	55	100	2	2.75	150	120	<10'	0.25"	2-WAY	SEE NOTES

NOTES:
1. WATER TEMPERATURE DROP SHALL BE 30° F. BOXES TO BE SELECTED AS SUCH.
2. ENTERING STATIC PRESSURE = 1" W.C.
3. BOX SUPPLIER TO PROVIDE FACTORY INSTALLED MULTI-POINT AVERAGING SENSORS. MECHANICAL CONTRACTOR TO PROVIDE BOXES WITH HANGING BRACKETS, AND PROVIDE DUCT TRANSITIONS TO AND FROM BOXES AS REQUIRED. TEMPERATURE CONTROL SUBCONTRACTOR TO FURNISH ALL DIGITAL VAV BOX CONTROLLERS, ACTUATORS ETC. TO THE BOX MANUFACTURER FOR INSTALLATION. COST OF CONTROLLERS AND SHIPPING SHALL BE BURDEN OF T.C. CONTRACTOR. COST OF THE INSTALLATION SHALL BE BY THE BOX MANUFACTURER.
4. SOUND DISCHARGE LEVELS TO BE <20 N.C. AT 1" INLET STATIC PRESSURE, UNLESS OTHERWISE NOTED.
5. ALL COILS TO BE 2 ROW UNLESS OTHERWISE NOTED.
6. SEE DETAILS 1&2 ON M301 FOR PIPING REQUIREMENTS AND 2/M304 FOR INSTALLATION REQUIREMENTS.

RADIANT ZONE SCHEDULE

PLAN CODE	MANUFACTURER	TUBE SPACING	SUPPLY TEMP. MAX	EWT	DELTA T	FT. OF HEAD	GPM (PER MANIFOLD)	HEADER SIZE	TUBE SIZE	# OF CIRC. (MAX 8 PER MANIFOLD)	APPROX. CIRC. LENGTHS	MBH OUTPUT	ZONE SQ. FT	SPACES SERVED	REMARKS
RZ-1	REHAU	6" O.C.	120	115	20	1.0	2.19	1"	1/2"	8	<300 FT	22.2	926	3	300' MAX CIRC. LENGTH
RZ-2	REHAU	6" O.C.	120	115	20	0.8	1.14	1"	1/2"	6	<300 FT	18.3	737	5	300' MAX CIRC. LENGTH
RZ-3	REHAU	6" O.C.	120	115	20	4.2	4.12	1"	1/2"	7	<300 FT	22.5	979	5	300' MAX CIRC. LENGTH
RZ-4	REHAU	6" O.C.	120	115	20	0.9	1.29	1"	1/2"	7	<300 FT	19.2	800	9	300' MAX CIRC. LENGTH
RZ-6	REHAU	6" O.C.	120	115	20	2.8	1.89	1"	1/2"	6	<300 FT	17.7	773	2	300' MAX CIRC. LENGTH

NOTES:
1. PROVIDE DDC CONTROL OF PUMPS, ETC. PER T.C. SEQUENCE.
2. VERIFY EXACT LOCATION OF RADIANT MANIFOLD LOCATIONS WITH G.C. PRIOR TO INSTALL.
3. PROVIDE RADIANT MAINFOLD WITH CIRCUIT BALANCE VALVES.
4. PROVIDE AND INSTALL WALL CABINET MANIFOLDS (MODEL REHAU-284) FOR RZ-3, RZ-4 AND RZ-5. SEE HYDRONIC PLAN FOR LOCATION. COORDINATE SIZE WITH MANIFOLD. CABINET TO BE PREPPED FOR PAINT BY G.C.

ACE INC
ASSOCIATED • CONSTRUCTION • ENGINEERING
2040 HARNISH BLVD.
BILLINGS, MT 59102
406-245-0136
ACE JOB 21BL5444

REGISTERED PROFESSIONAL ENGINEER
TODD A. MELING
PE-8317
DATE 2022.05.09
NORTH DAKOTA

LONG LAKE NWR

MECHANICAL SCHEDULES

NEW HEADQUARTERS AND VISITOR CENTER

SUB-SHEET M004

DESIGNED	DRAWN	CHECKED	DATE	DRAWING NO.	SHEET
AS	TA	AS	2022.05.09		43 OF 66

MECHANICAL GENERAL NOTES

1	MECHANICAL CONTRACTOR SHALL CUT ALL FLOORS, WALLS, CEILINGS, AND ROOF AS REQUIRED TO PERFORM THE WORK DEPICTED IN THESE CONTRACT DOCUMENTS AND SPECIFICATIONS. GENERAL CONTRACTOR SHALL PATCH ALL ASSOCIATED FLOORS, WALLS, CEILINGS, AND ROOF AS REQUIRED TO THE SATISFACTION OF THE ARCHITECT/ENGINEER.
2	COORDINATE EXACT LOCATION OF DIFFUSERS AND GRILLES WITH REFLECTED CEILING PLAN AND LIGHTING LAYOUT.
3	FLEX DUCT RUN OUTS SHALL BE LIMITED TO 5'-0".
4	COORDINATE HVAC AND PLUMBING EQUIPMENT WITH ALL OTHER TRADES AS REQUIRED.
5	ALL CEILING DIFFUSERS TO BE 4-WAY UNLESS OTHERWISE NOTED.
6	DUCT PENETRATIONS THROUGH ROOF AND FLOOR TO BE COORDINATED WITH JOIST LAYOUT.
7	ALL DUCTS ABOVE CORRIDOR AREAS TO BE MINIMUM 24 GAUGE SHEET METAL.
8	PROVIDE FLUSH CUP CONCEALED OPERATORS ON ALL HAND DAMPERS LOCATED ABOVE HARD CEILINGS.
9	SEAL ALL MECHANICAL PENETRATIONS THROUGH FIRE RATED ASSEMBLIES WITH UL-APPROVED FIRE RATED SYSTEM.
10	ALL DUCT DIMENSIONS SHOWN ON PLANS ARE CLEAR INTERIOR DIMENSIONS.
11	VERIFY EXACT LOCATION OF T-STATS WITH ARCHITECT PRIOR TO INSTALLATION.
12	PROVIDE ACCESS PANELS FOR EACH FIRE DAMPER PER IMC STANDARDS/REQUIREMENTS.

MECHANICAL KEYNOTES

1	4" EXHAUST DUCT UP FROM MICROWAVE RANGE HOOD TO ROOF CAP.
2	3" PVC COMBUSTION AIR/ CPVC FLUE VENTING FROM BOILER. TERMINATE PER BOILER MANUFACTURER'S REQUIREMENTS.
3	EXHAUST DUCT THROUGH ROOF. SEE M104 FOR CONTINUATION.
4	INLINE EXHAUST FAN, SEE 3/M304 FOR CONFIGURATION.
5	SEE 3/M304 FOR FC-1 CONFIGURATION.
6	ROUTE EXHAUST TERMINATION TO WALL CAP TERMINATION.
7	FRESH AIR INTAKE LOUVER.
8	MOTORIZED RELIEF LOUVER. 24V BY T.C.
9	DUCTWORK EXPOSED IN 107 VISITOR CONTACT. DUCTWORK TO BE PAINTED PER NOTE ON MECHANICAL COVER SHEET.
10	LINED TRANSFER DUCTWORK.

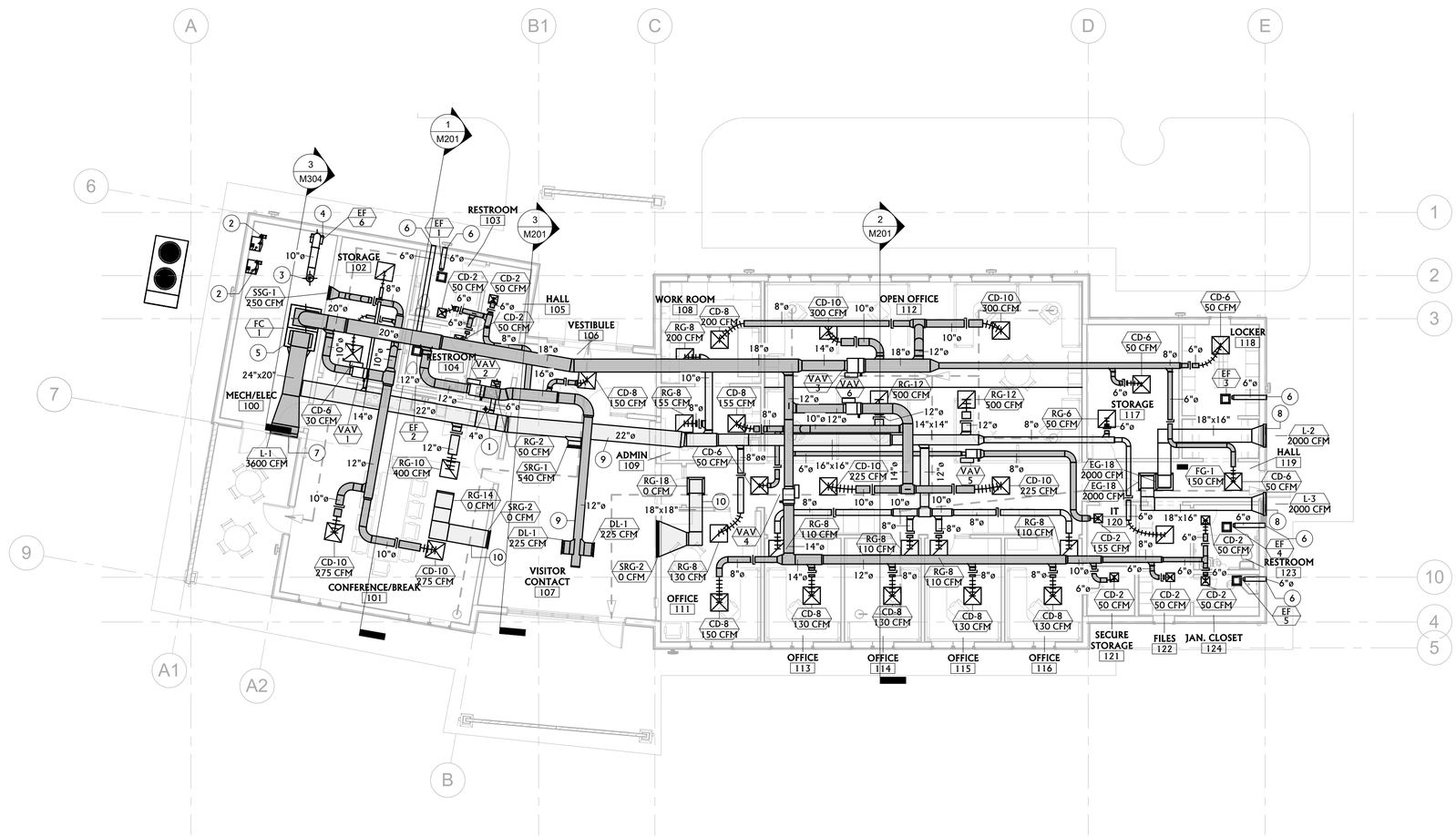

N

1 / M101 FIRST FLOOR MECHANICAL HVAC PLAN

1/8" = 1'-0"

ACE INC
ASSOCIATED • CONSTRUCTION • ENGINEERING
2040 HARNISH BLVD.
BILLINGS, MT 59102
406-245-0136
ACE JOB 21BL5444

REGISTERED PROFESSIONAL ENGINEER
TODD A. MELING
PE-8312
DATE 2022.05.09
NORTH DAKOTA

LONG LAKE NWR

MECHANICAL HVAC PLAN

NEW HEADQUARTERS AND VISITOR CENTER

SUB-SHEET M101

DESIGNED	DRAWN	CHECKED	DATE	DRAWING NO.	SHEET
AS	TA	AS	2022.05.09		44 OF 66

BIM 360://5444 - USFW LONG LAKE VISITOR CENTER/21BL5444-MECHANICAL_R20.rvt

MECHANICAL PIPING GENERAL NOTES

1	MECHANICAL CONTRACTOR SHALL CUT ALL FLOORS, WALLS, CEILINGS AND ROOF AS REQUIRED TO PERFORM THE WORK DEPICTED IN THESE CONTRACT DOCUMENTS AND SPECIFICATIONS. GENERAL CONTRACTOR SHALL PATCH ALL ASSOCIATED FLOORS, WALLS, CEILINGS, AND ROOF AS REQUIRED TO THE SATISFACTION OF THE ARCHITECT/ENGINEER.
2	SEAL ALL MECHANICAL PENETRATIONS THROUGH FIRE RATED ASSEMBLIES WITH UL-APPROVED FIRE RATED SYSTEM.
3	HYDRONIC VALVES 2" AND SMALLER TO BE BALL VALVES. HYDRONIC VALVES LARGER THAN 2" TO BE LUG STYLE BUTTERFLY VALVES.
4	LOCATE ALL VALVES ABOVE ACCESSIBLE CEILINGS OR PROVIDE ACCESS PANEL IN CEILING FOR VALVE ACCESS. ACCESS PANELS SHALL BE RATED WHERE REQUIRED.
5	COORDINATE HVAC AND PLUMBING ROUTING AND EQUIPMENT WITH ALL OTHER TRADES AS REQUIRED.
6	VERIFY EXACT LOCATION OF THERMOSTATS WITH ARCHITECT PRIOR TO INSTALLATION.
7	THERMOSTATS TO BE LOCATED AT 48" A.F.F.

MECHANICAL KEYNOTES

1	NOTE: ROUTE RADIANT HEATING TUBING IN FLOOR AROUND WALK-OFF MAT FRAMING. SEE ARCHITECTURAL PLANS FOR WALK-OFF MAT LOCATION AND DIMENSIONS.
2	VFD PROVIDED BY T.C. INSTALLED BY E.C. FOR POWER TO FC-1.
3	TEMPERATURE CONTROL PANEL. 120V BY E.C.
4	SEE 4/M303 FOR RADIANT PIPING MANIFOLD INSTALLATION. (TYP.)
5	3/4" HWS/HWR DOWN TO SERVE CUH-1. SEE 5/M302 FOR CABINET HEATER DETAIL.
6	PROVIDE 3/4" HWS/HWR CONNECTION TO VAV BOX. PROVIDE 2-WAY CONTROL VALVE CONFIGURATION PER 2/M301.
7	ELECTRICAL PANELS. MAINTAIN REQUIRED CLEARANCES.
8	1-1/2" HWS/HWR PIPING CONNECTION TO FC-1. SEE 1/M301 FOR DETAIL.
9	ROUTE 1-1/2" CONDENSATE DRAIN TO FLOOR SINK FROM FC-1. SEE 3/M301 FOR DETAIL.
10	SEE 1/M303 FOR INLINE PUMP DETAIL.
11	CU-1 MOUNTED ON 4" CONCRETE PAD BY G.C.
12	SEE 4/M301 FOR CONDENSING UNIT PIPING DETAIL.
13	REFRIGERANT PIPING UP FROM BELOW GRADE. ROUTE HIGH IN MECHANICAL ROOM AND CONNECT TO FC-1 PER DETAIL 4/M301.
14	PROVIDE 3/4" HWS/HWR CONNECTION TO VAV BOX. PROVIDE 3-WAY CONTROL VALVE CONFIGURATION PER 1/M302.

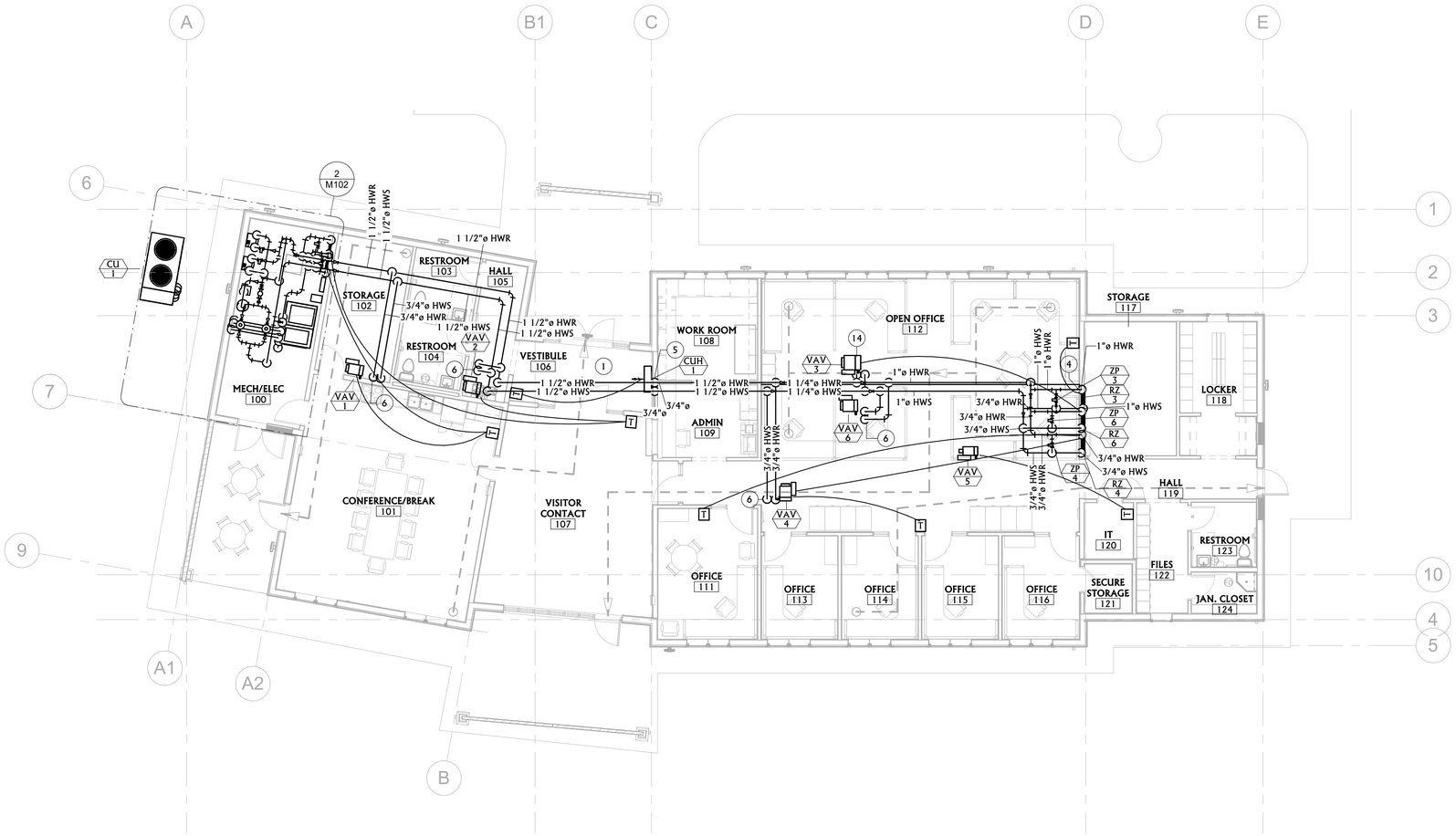

N

1 / M102 FIRST FLOOR MECHANICAL PIPING PLAN

1/8" = 1'-0"

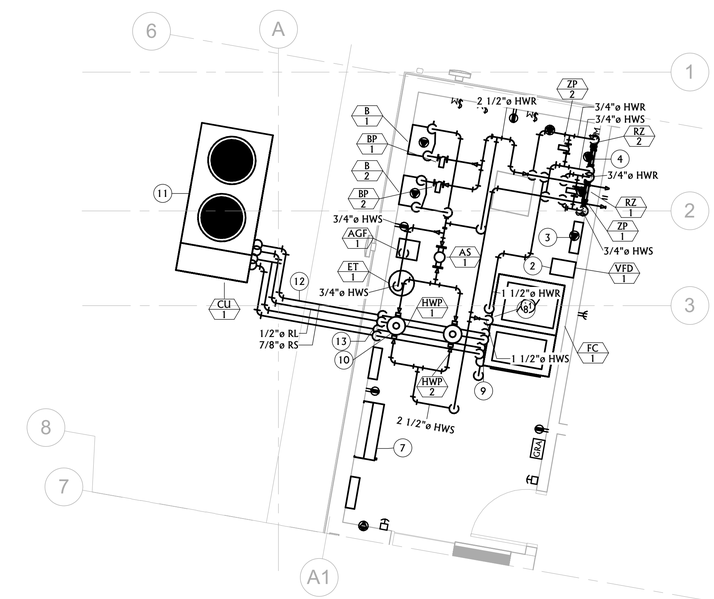

N

2 / M102 ENLARGED MECHANICAL ROOM PLAN

1/4" = 1'-0"

ACE INC
ASSOCIATED • CONSTRUCTION • ENGINEERING
2040 HARNISH BLVD.
BILLINGS, MT 59102
406-245-0136
ACE JOB 21BL5444

REGISTERED PROFESSIONAL ENGINEER
TODD A. MELING
PE-8317
DATE 2022.05.09
NORTH DAKOTA

LONG LAKE NWR

MECHANICAL PIPING PLAN

NEW HEADQUARTERS AND VISITOR CENTER

SUB-SHEET M102

DESIGNED	DRAWN	CHECKED	DATE	DRAWING NO.	SHEET
AS	TA	AS	2022.05.09		45 OF 66

MECHANICAL GENERAL NOTES

1	MECHANICAL CONTRACTOR SHALL CUT ALL FLOORS, WALLS, CEILINGS, AND ROOF AS REQUIRED TO PERFORM THE WORK DEPICTED IN THESE CONTRACT DOCUMENTS AND SPECIFICATIONS. GENERAL CONTRACTOR SHALL PATCH ALL ASSOCIATED FLOORS, WALLS, CEILINGS, AND ROOF AS REQUIRED TO THE SATISFACTION OF THE ARCHITECT/ENGINEER.
2	COORDINATE EXACT LOCATION OF DIFFUSERS AND GRILLES WITH REFLECTED CEILING PLAN AND LIGHTING LAYOUT.
3	FLEX DUCT RUN OUTS SHALL BE LIMITED TO 5'-0".
4	COORDINATE HVAC AND PLUMBING EQUIPMENT WITH ALL OTHER TRADES AS REQUIRED.
5	ALL CEILING DIFFUSERS TO BE 4-WAY UNLESS OTHERWISE NOTED.
6	DUCT PENETRATIONS THROUGH ROOF AND FLOOR TO BE COORDINATED WITH JOIST LAYOUT.
7	ALL DUCTS ABOVE CORRIDOR AREAS TO BE MINIMUM 24 GAUGE SHEET METAL.
8	PROVIDE FLUSH CUP CONCEALED OPERATORS ON ALL HAND DAMPERS LOCATED ABOVE HARD CEILINGS.
9	SEAL ALL MECHANICAL PENETRATIONS THROUGH FIRE RATED ASSEMBLIES WITH UL-APPROVED FIRE RATED SYSTEM.
10	ALL DUCT DIMENSIONS SHOWN ON PLANS ARE CLEAR INTERIOR DIMENSIONS.
11	VERIFY EXACT LOCATION OF T-STATS WITH ARCHITECT PRIOR TO INSTALLATION.
12	PROVIDE ACCESS PANELS FOR EACH FIRE DAMPER PER IMC STANDARDS/REQUIREMENTS.

MECHANICAL KEYNOTES

1	3" PVC COMBUSTION AIR/ CPVC FLUE VENTING FROM BOILER. TERMINATE PER BOILER MANUFACTURER'S REQUIREMENTS.
2	4" EXHAUST DUCT UP FROM MICROWAVE RANGE HOOD TO ROOF CAP.
3	ROUTE EXHAUST TERMINATION TO ROOF CAP TERMINATION.

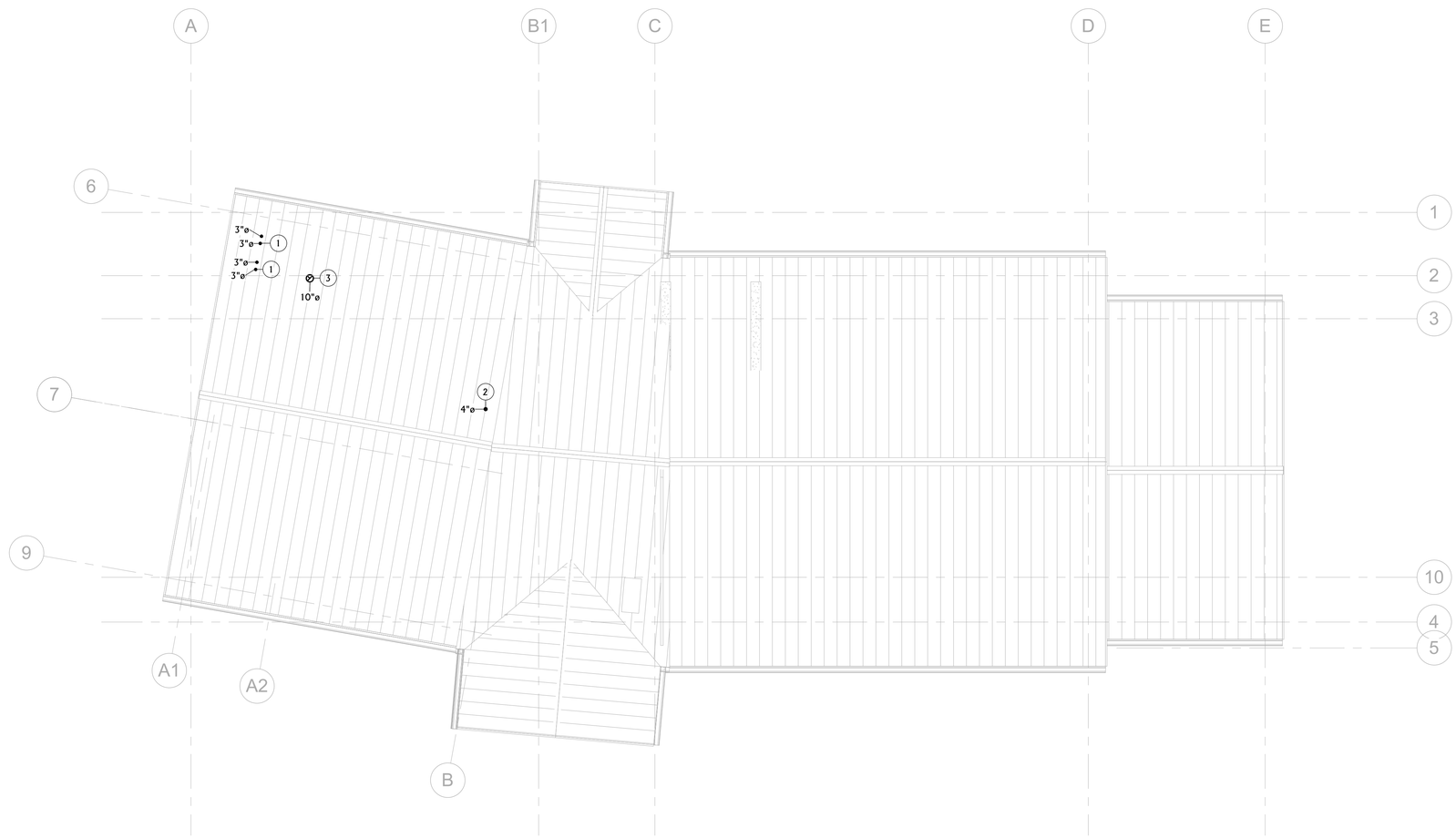

N

1 / M103 ROOF MECHANICAL PLAN

1/8" = 1'-0"

ACE INC
ASSOCIATED • CONSTRUCTION • ENGINEERING
2040 HARNISH BLVD.
BILLINGS, MT 59102
406-245-0136
ACE JOB 21BL5444

REGISTERED PROFESSIONAL ENGINEER
TODD A. MELING
PE-8312
DATE 2022.05.09
NORTH DAKOTA

LONG LAKE NWR

ROOF MECHANICAL PLAN

NEW HEADQUARTERS AND VISITOR CENTER

SUB-SHEET M103

DESIGNED	DRAWN	CHECKED	DATE	DRAWING NO.	SHEET
AS	TA	AS	2022.05.09		46 OF 66

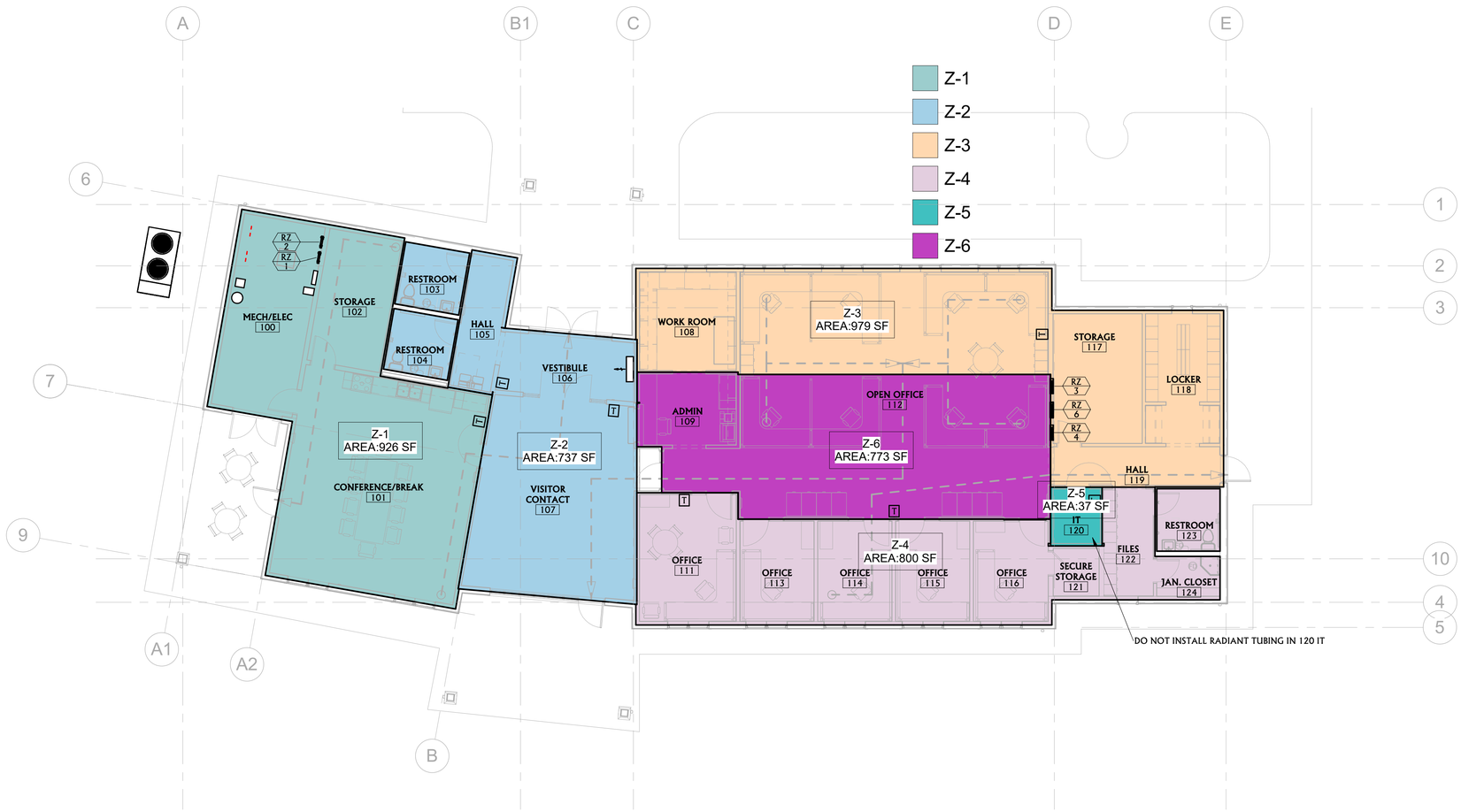

N

1
M104

FIRST FLOOR MECHANICAL HVAC ZONE PLAN

1/8" = 1'-0"

ACE INC
ASSOCIATED • CONSTRUCTION • ENGINEERING
2040 HARNISH BLVD.
BILLINGS, MT 59102
406-245-0136
ACE JOB 21BL5444

REGISTERED PROFESSIONAL ENGINEER
TODD A. MELING
PE-8313
DATE 2022.05.09
NORTH DAKOTA

LONG LAKE NWR

MECHANICAL HVAC ZONE PLAN

NEW HEADQUARTERS AND VISITOR CENTER

SUB-SHEET M104

DESIGNED	DRAWN	CHECKED	DATE	DRAWING NO.	SHEET
AS	TA	AS	2022.05.09		47 OF 66

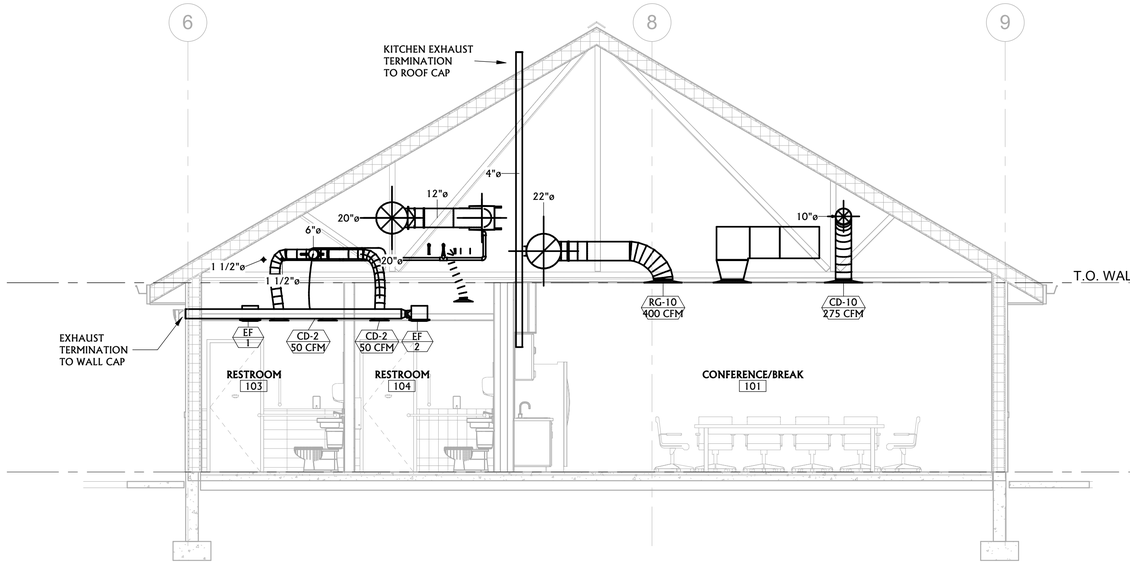

N

1 M201 MECHANICAL BUILDING SECTION

1/4" = 1'-0"

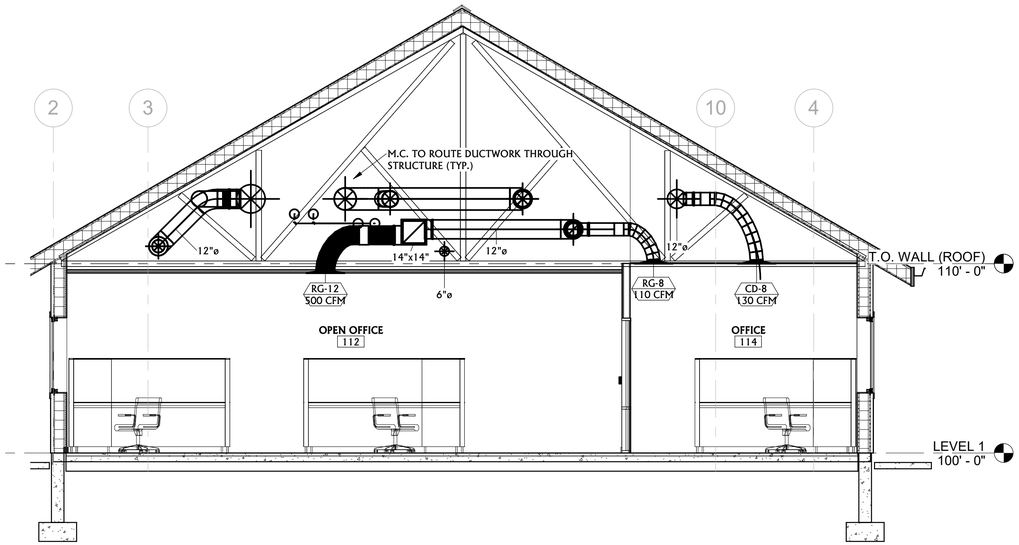

N

2 M201 MECHANICAL BUILDING SECTION

1/4" = 1'-0"

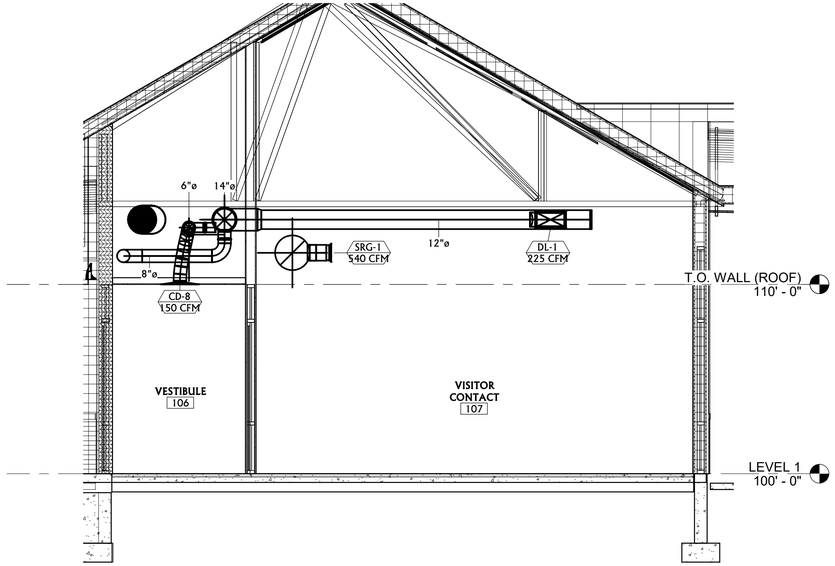

N

3 M201 MECHANICAL BUILDING SECTION

1/4" = 1'-0"

ACE INC
ASSOCIATED • CONSTRUCTION • ENGINEERING
2040 HARNISH BLVD.
BILLINGS, MT 59102
406-245-0136
ACE JOB 21BL5444

REGISTERED PROFESSIONAL ENGINEER
TODD A. MELING
PE-8313
DATE 2022.05.09
NORTH DAKOTA

LONG LAKE NWR

SECTIONS AND ENLARGED PLANS

NEW HEADQUARTERS AND VISITOR CENTER

SUB-SHEET M201

DESIGNED	DRAWN	CHECKED	DATE	DRAWING NO.	SHEET
AS	TA	AS	2022.05.09		48 OF 66

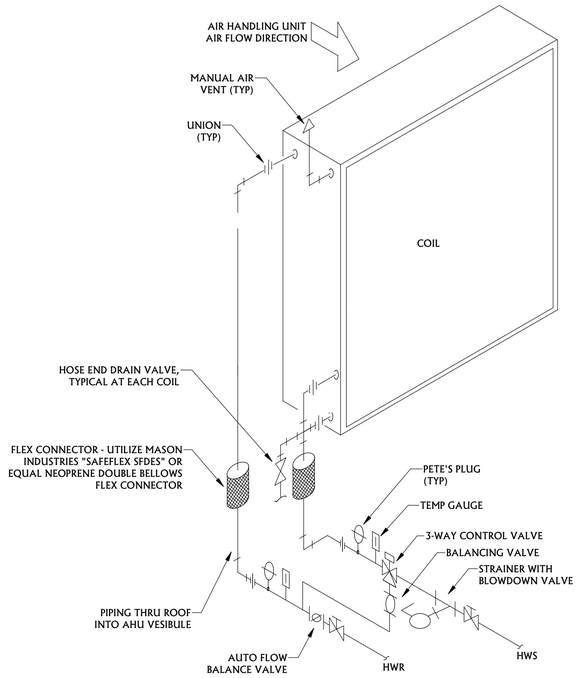

NOTE:

CONTRACTOR SHALL OFFSET COIL PIPING CONNECTIONS TO ALLOW FOR REMOVAL OF COILS. PROVIDE ADDITIONAL VALVES, UNIONS, ETC. AS REQUIRED TO INSTALL COIL(S) PER THE MANUFACTURER'S RECOMMENDATIONS/REQUIREMENTS. DRAIN AND VENT VALVES SHALL BE INSTALLED IN ALL COIL PORTS.

1 FC-1 3-WAY COIL DETAIL

NOT TO SCALE

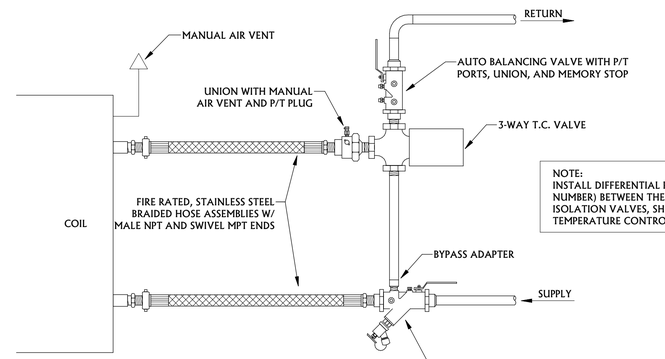

NOTE:
INSTALL DIFFERENTIAL PRESSURE TRANSDUCER STATION FOR VAV-??? (ADD NUMBER) BETWEEN THE SUPPLY AND RETURN LEGS. STATION TO INCLUDE ISOLATION VALVES, SHUNT VALVE, AND DIFFERENTIAL TRANSDUCER PER THE TEMPERATURE CONTROL CONTRACTOR'S INSTRUCTIONS.

NOTE:
CONTRACTOR HAS THE OPTION TO HARD PIPE THE VAV COIL OR PROVIDE A FLEXIBLE PIPE CONNECTOR AS SHOWN IN THE DETAIL. CONTRACTOR SHALL UTILIZE THE SAME CONNECTION METHOD FOR ALL VAV'S IN THE PROJECT.

2 3-WAY COIL DETAIL

NOT TO SCALE

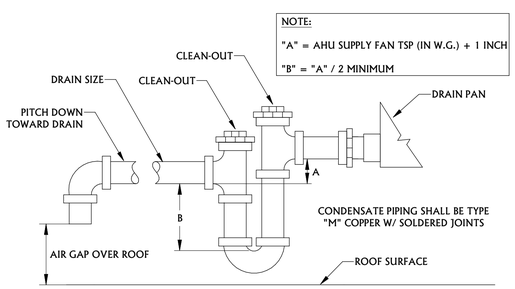

NOTE:

"A" = AHU SUPPLY FAN TSP (IN W.G.) + 1 INCH

"B" = "A" / 2 MINIMUM

3 AHU CONDENSATE DRAIN TRAP DETAIL

NOT TO SCALE

PIPING IS FOR REFERENCE ONLY AND IS TYPICAL OF CU-1. MECHANICAL CONTRACTOR TO COORDINATE WITH MANUFACTURER FOR EXACT PIPING LAYOUT PRIOR TO INSTALLATION. ALL REFRIGERANT LINES SHALL SLOPE IN DIRECTION OF FLOW. WEATHERPROOF INSULATION ON SUCTION LINES. ALL PIPING SHALL BE REFRIGERANT PIPE AND SIZES ARE O.D.

1. THERMOSTATIC EXPANSION VALVE WITH REMOTE BULB AND EXTERNAL EQUALIZER LINE.
2. 24 VOLT LIQUID LINE SOLENOID VALVE WIRE TO CU-1 TERMINAL BLOCK. CONTRACTOR TO WIRE.
3. LIQUID LINE FILTER DRIER WITH BYPASS VALVES AROUND IT FOR REMOVAL OF CORES.
4. SHUT-OFF VALVE.
5. SIGHT GLASS

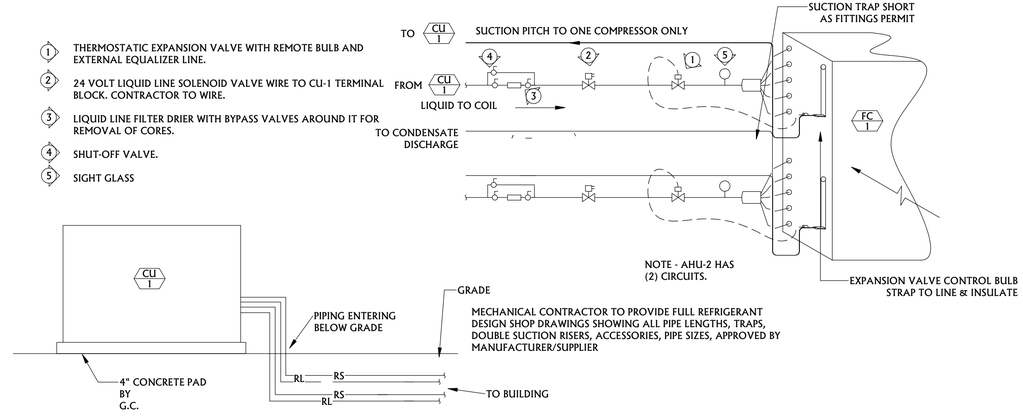

4 CONDENSING UNIT CU-1 PIPING (TWO CIRCUIT)

NOT TO SCALE

ACE INC
ASSOCIATED • CONSTRUCTION • ENGINEERING
2040 HARNISH BLVD.
BILLINGS, MT 59102
406-245-0136
ACE JOB 21BL5444

REGISTERED PROFESSIONAL ENGINEER
TODD A. MELING
PE-8313
DATE 2022.05.09
NORTH DAKOTA

LONG LAKE NWR					SUB-SHEET
MECHANICAL DETAILS					M301
NEW HEADQUARTERS AND VISITOR CENTER					
DESIGNED AS	DRAWN TA	CHECKED AS	DATE 2022.05.09	DRAWING NO.	SHEET 49 OF 66

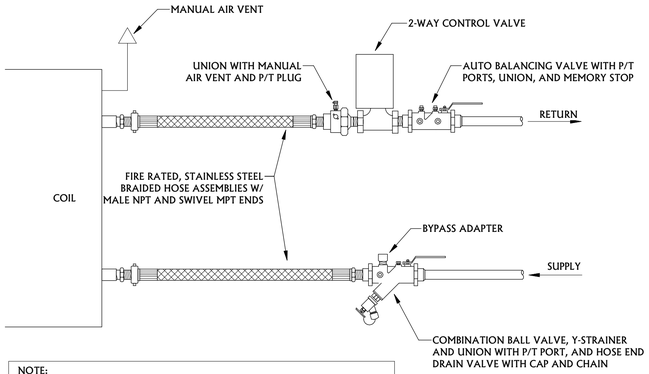

NOTE:
CONTRACTOR HAS THE OPTION TO HARD PIPE THE VAV COIL OR PROVIDE A FLEXIBLE PIPE CONNECTOR AS SHOWN IN THE DETAIL. CONTRACTOR SHALL UTILIZE THE SAME CONNECTION METHOD FOR ALL VAV'S IN THE PROJECT.

4 2-WAY COIL DETAIL
NOT TO SCALE

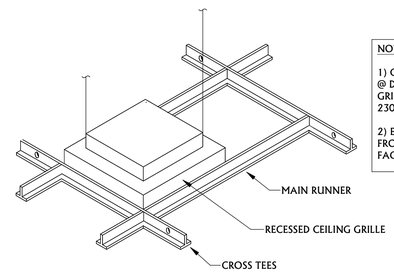

NOTES:

1) CONNECT 2 NO. 12 GA. GRILLE SUPPORT WIRES @ DIAGONAL CORNERS OF EACH CEILING GRILLE. MAX. CEILING GRILLE WT. 55#. SEE SPEC. 230548 FOR MORE INFORMATION.

2) EXCLUDE GRILLES LESS THAN 20LBS OR LESS FROM THIS REQUIREMENT WHERE IMPORTANCE FACTOR IP = 1.0

2 CEILING GRILLE SUPPORT DETAIL
NOT TO SCALE

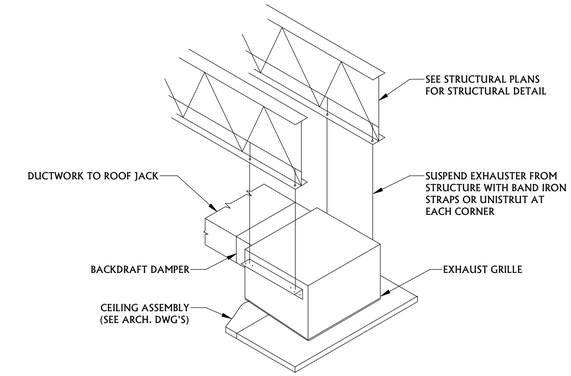

3 CEILING MOUNTED EXHAUST FAN
NOT TO SCALE

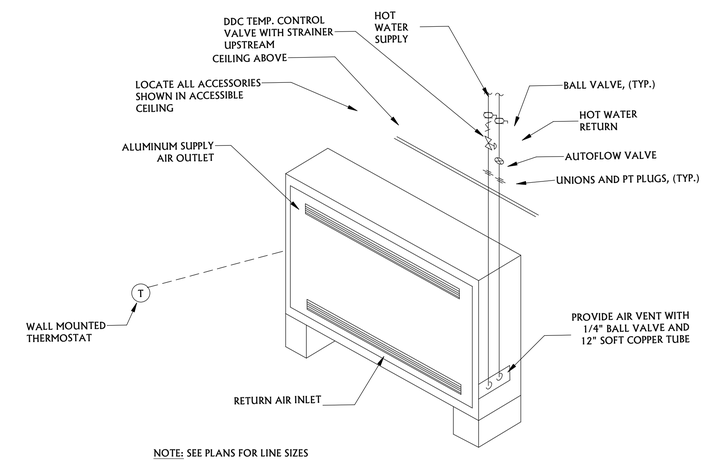

NOTE: SEE PLANS FOR LINE SIZES

6 FLOOR MOUNTED CABINET UNIT HEATER DETAIL
NOT TO SCALE

ACE | INC
ASSOCIATED • CONSTRUCTION • ENGINEERING
2040 HARNISH BLVD.
BILLINGS, MT 59102
406-245-0136
ACE JOB 21BL5444

REGISTERED PROFESSIONAL ENGINEER
TODD A. MELING
PE-5313
DATE 2022.05.09
NORTH DAKOTA

LONG LAKE NWR

MECHANICAL DETAILS

NEW HEADQUARTERS AND VISITOR CENTER

SUB-SHEET M302

DESIGNED	DRAWN	CHECKED	DATE	DRAWING NO.	SHEET
AS	TA	AS	2022.05.09		50 OF 66

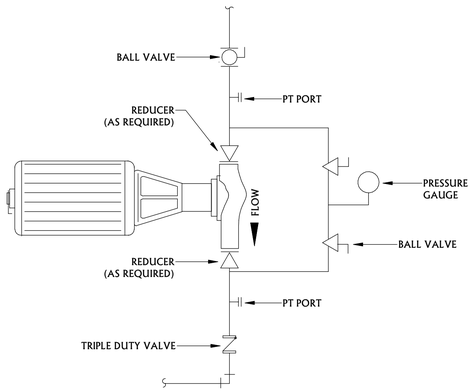

1 INLINE PUMP DETAIL
NOT TO SCALE

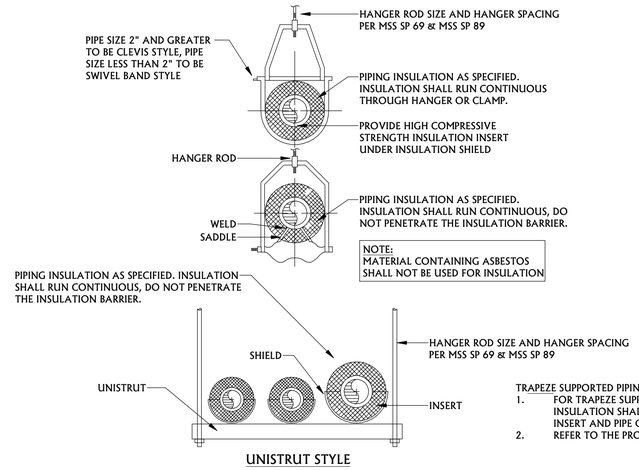

TRAPEZE SUPPORTED PIPING NOTES:
1. FOR TRAPEZE SUPPORTED PIPING; 1-1/2" AND LESS PIPING INSTALL PROTECTION SHIELD AND PIPE CLAMP, INSULATION SHALL BE CONTINUOUS. 2" AND GREATER PIPING INSTALL THERMAL-HANGER SHIELD INSERT AND PIPE CLAMP, INSULATION SHALL BE CONTINUOUS.
2. REFER TO THE PROJECT GENERAL NOTES FOR ADDITIONAL REQUIREMENTS.

2 PIPE HANGER DETAILS
NOT TO SCALE

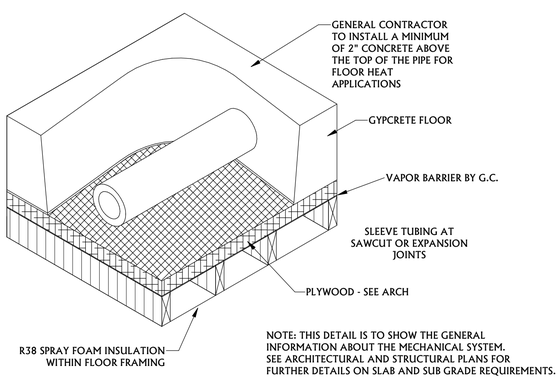

3 RADIANT FLOOR DETAIL - STRUCTURAL FLOOR INSTALLATION
NOT TO SCALE

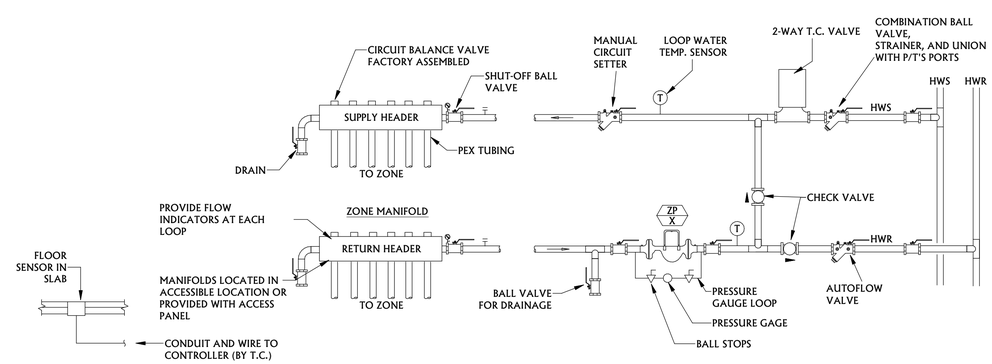

4 RADIANT FLOOR SYSTEM SCHEMATIC
NOT TO SCALE

ACE INC
ASSOCIATED • CONSTRUCTION • ENGINEERING
2040 HARNISH BLVD.
BILLINGS, MT 59102
406-245-0136
ACE JOB 21BL5444

REGISTERED PROFESSIONAL ENGINEER
TODD A. MELING
PE-8312
DATE 2022.05.09
NORTH DAKOTA

LONG LAKE NWR

MECHANICAL DETAILS

NEW HEADQUARTERS AND VISITOR CENTER

SUB-SHEET M303

DESIGNED	DRAWN	CHECKED	DATE	DRAWING NO.	SHEET
AS	TA	AS	2022.05.09		51 OF 66

GENERAL MECHANICAL NOTES:

1) PIPE BOILERS IN PRIMARY/SECONDARY CONFIGURATION PER THE MANUFACTURER'S PIPING DIAGRAMS. PROVIDE ALL RECOMMENDED ACCESSORIES AS WELL AS THOSE THOWN ON THIS SCHEMATIC.

2) PROVIDE EACH BOILER WITH INTEGRAL HIGH LIMIT TEMPERATURE CONTROL WITH MANUAL RESET, FLOW SWITCH, AND LOW-WATER FUEL CUT- OFF WITH MANUAL RESET, HIGH AND LOW GAS PRESSURE SWITCHES WITH MANUAL RESET.

3) BOILERS ARE 89% CAPACITY. PUMPS ARE 100% CAPACITY.

4) INSTALL ALL EQUIPMENT PER MANUFACTURER INSTALLATION INSTRUCTIONS.

5) PIPE A 2.5 GALLON CHEMICAL POT FEEDER FROM SUCTION TO DISCHARGE OF HWP-1 AND HWP-2. MOUNT A MAXIMUM OF 48" A.F.F.

6) LOCATE WATER INLET AND OUTLET FITTINGS AND ALL PIPING AWAY FROM BOILER TO ALLOW FOR REMOVAL OF ACCESS PANELS.

GENERAL VALVING NOTES:

2) ALL VALVES TO BE BALL VALVES.

GENERAL PIPING NOTES:

1) ALL TRANSISTIONS FROM GROOVED PIPE TO FLANGE SHALL BE WELDED FLANGE.

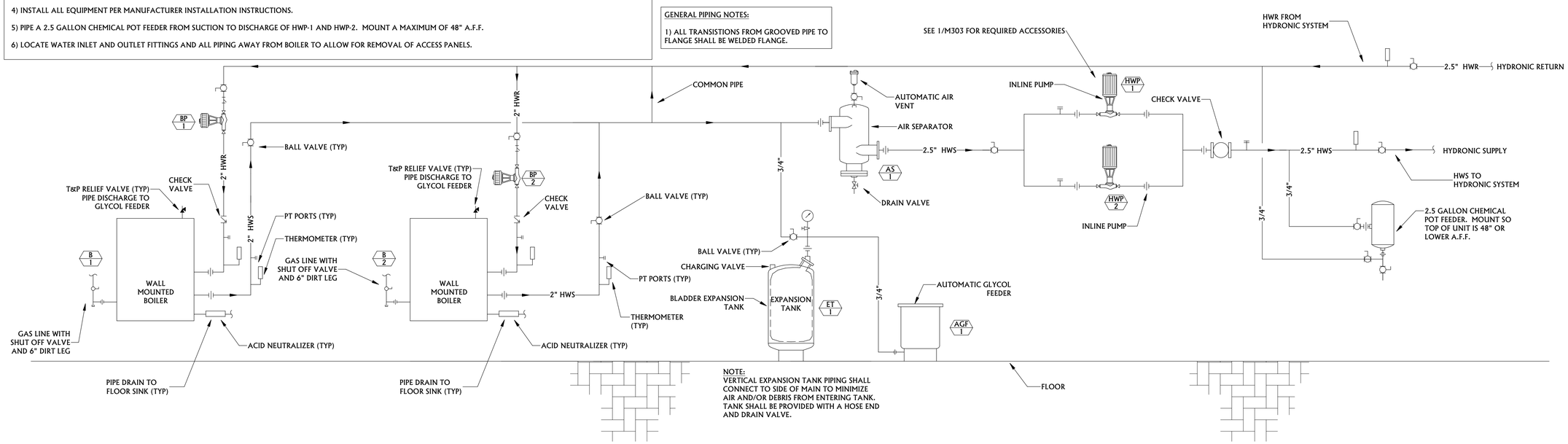

1 HYDRONIC HEATING SYSTEM SCHEMATIC
NOT TO SCALE

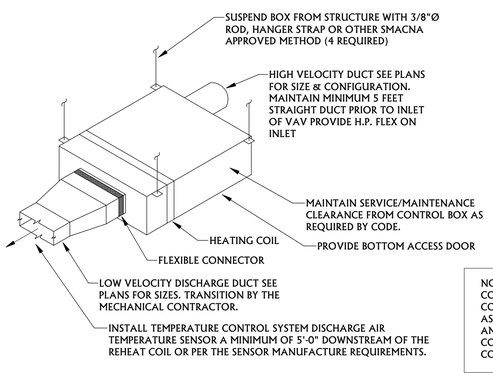

NOTE:
CONTRACTOR HAS THE OPTION TO PROVIDE A HARD DUCT CONNECTION TO THE VAV BOX OR PROVIDE A FLEXIBLE CONNECTOR AS SHOWN IN THE DETAIL. CONTRACTOR SHALL MINIMIZE THE NUMBER AND DEGREE OF DUCT OFFSETS TO THE VAV BOX IF A HARD DUCT CONNECTION IS UTILIZED. CONTRACTOR SHALL UTILIZE THE SAME CONNECTION METHOD FOR ALL VAV'S IN THE PROJECT.

2 VAV BOX DETAIL
NOT TO SCALE

6 8

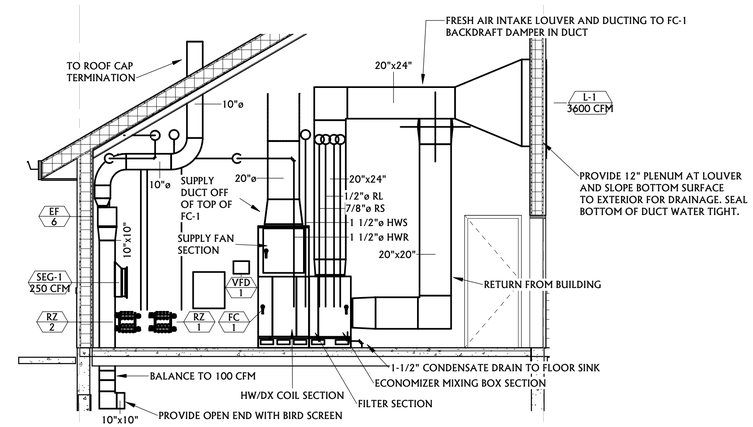

3 MECHANICAL ROOM SECTION
NOT TO SCALE

ACE INC
ASSOCIATED • CONSTRUCTION • ENGINEERING
2040 HARNISH BLVD.
BILLINGS, MT 59102
406-245-0136
ACE JOB 21BL5444

REGISTERED PROFESSIONAL ENGINEER
TODD A. MELING
PE-8317
DATE 2022.05.09
NORTH DAKOTA

LONG LAKE NWR

MECHANICAL DETAILS

NEW HEADQUARTERS AND VISITOR CENTER

SUB-SHEET M304

DESIGNED	DRAWN	CHECKED	DATE	DRAWING NO.	SHEET
AS	TA	AS	2022.05.09		52 OF 66

BIM 360://5444 - USFW LONG LAKE VISITOR CENTER/21BL5444-MECHANICAL_R20.rvt

ELECTRICAL LEGEND

LIGHTING DEVICES

	LAY-IN OR RECESSED LIGHTING FIXTURE
	SURFACE MOUNTED LIGHTING FIXTURE
	DIRECT/ INDIRECT LIGHTING PENDANT MOUNTED FIXTURE.
	SURFACE MOUNTED OR CHAIN HUNG STRIP FIXTURE
	WALL BRACKET LIGHTING FIXTURE
	RECESSED DOWN LIGHT, HALF MOON INDICATES WALL WASH TRIM AND DIRECTION.
	SURFACE MOUNTED CYLINDER FIXTURE
	WALL MOUNTED FIXTURE
	WALL SCONCE FIXTURE
	FILLED CENTER OR SLASH INDICATES FIXTURE IS AN EMERGENCY DEVICE WITH EMERGENCY BATTERY PACK OR CONNECTED TO EMERGENCY POWER.
	EXIT SIGN, BRACKET INDICATES WALL MOUNTING. NUMBER OF FACES AND DIRECTION INDICATED BY FILLED AREAS.
	REMOTE DOUBLE HEAD EGRESS FIXTURE
	SITE GROUND MOUNTED FLOOD FIXTURE
	DOUBLE HEAD WALL MOUNTED BATTERY PACK POWERED EGRESS FIXTURE.
	SQUARE HEAD POLE MOUNTED SITE LIGHT FIXTURE.
	ROUND HEAD POLE MOUNTED SITE LIGHT FIXTURE.

INTERIOR MOUNTING HEIGHTS

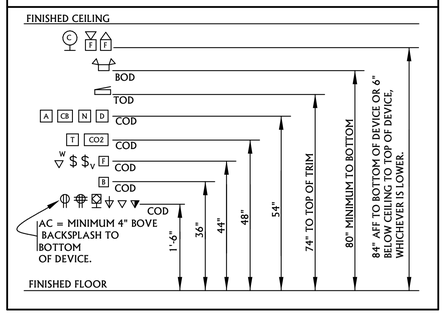

FIRE ALARM DEVICES

F	MANUAL PULL STATION
F	AUDIO/VISUAL HORN/STOBE DEVICE
F	VISUAL STROBE DEVICE
F	AUDIO SPEAKER DEVICE
F	CEILING MOUNTED AUDIO/VISUAL SPEAKER/STROBE DEVICE
F	CEILING MOUNTED AUDIO SPEAKER DEVICE
M	MAGNETIC DOOR HOLDER
SD	SMOKE DETECTOR
HD	HEAT DETECTOR
CO	CARBON MONOXIDE DETECTOR
DSD	DUCT SMOKE DETECTOR
FSD	FIRE SMOKE DAMPER
FACP	FIRE ALARM CONTROL PANEL
FAA	FIRE ALARM REMOTE ANNUNCIATOR
R	ADDRESSABLE INTERFACE DEVICE BY EC FOR FIRE/SMOKE DAMPERS

COMMUNICATION DEVICES

V	COMBINATION VOICE/ DATA DEVICE JACKS, BOX INDICATES FLOOR MOUNTING
V	VOICE DEVICE JACK, BOX INDICATES FLOOR MOUNTING
	CABLE TV JACK
	INTERCOM JACK
S	CEILING MOUNTED SPEAKER
S	WALL MOUNTED SPEAKER
$V	WALL MOUNTED VOLUME CONTROLLER

SECURITY SYSTEM DEVICES

CCTV	CLOSED CIRCUIT CAMERA
MS	CEILING MOUNTED MOTION SENSOR
MS	CORNER MOUNTED MOTION SENSOR
MS	WALL MOUNTED MOTION SENSOR
KP	KEY PAD
REX	REQUEST TO EXIT SENSOR

MISCELLANEOUS LEGEND

W/	WITH	AFF	ABOVE FINISHED FLOOR
AC	ABOVE COUNTER	AFG	ABOVE FINISHED GRADE
EC	ELECTRICAL CONTRACTOR	WM	WIRE MOLD
(E)	EXISTING	GC	GENERAL CONTRACTOR
(R)	RELOCATED	GND	GROUND
(N)	NEW DEVICE	UG	UNDER GROUND
C	CONDUIt	BOD	BOTTOM OF DEVICE
BFG	BELOW FINISHED GRADE	TOD	TOP OF DEVICE
UC	UNDER COUNTER	COD	CENTER OF DEVICE
WP	WEATHER PROOF	BOF	BOTTOM OF FIXTURE
MC	MECHANICAL CONTRACTOR	PC	PLUMBING CONTRACTOR

1	REFER TO ELECTRICAL NOTES
	HOMERUN TO ELECTRICAL PANEL
	NUMBER OF HASH MARKS INDICATES NUMBER OF CURRENT CARRYING CONDUCTORS. NO MARKS INDICATES TWO. GROUNDING CONDUCTOR NOT SHOWN BUT SHALL BE INCLUDED IN ALL CONDUITS.
	NORMAL CIRCUIT CONCEALED IN WALL OR EXPOSED
	UNDERGROUND OR BURIED CIRCUIT

POWER DEVICES

$	SINGLE POLE SWITCH, SUBSCRIPT INDICATES TYPE: P PILOT LIGHT 2 2 POLE MC MOMENTARY CONTACT 3 3-WAY 4 4-WAY K KEYED D DIMMER LV LOW VOLTAGE T TIMER, 1 HOUR TIMER, MOTOR RATED FOR EXHAUST FANS OS OCCUPANCY SENSOR
	DUPLEX RECEPTACLE SUBSCRIPT INDICATES TYPE: WP WEATHERPROOF GFCI GROUND FAULT CIRCUIT INTERRUPTER AC ABOVE COUNTER IG ISOLATED GROUND TR TAMPER RESISTANT WR WEATHER RESISTANT FILLED CENTER INDICATES GFCI DEVICE
	DOUBLE DUPLEX RECEPTACLE, SUBSCRIPT ABOVE INDICATE TYPE
	DUPLEX RECEPTACLE IN FLOOR BOX
	DOUBLE DUPLEX RECEPTACLE IN FLOOR BOX
	SIMPLEX RECEPTACLE
	DUPLEX RECEPTACLE, CEILING MOUNTED. DEVICE AND COVER SHALL MATCH CEILING FINISH
	SWITCHED DUPLEX RECEPTACLE, BOX INDICATES DEVICE LOCATED IN FLOOR BOX
	208V SINGLE PHASE RECEPTACLE, CONFIGURATION NOTED ON PLANS
	208V THREE PHASE RECEPTACLE, CONFIGURATION NOTED ON PLANS
	SIMPLEX RECEPTACLE IN FLOOR BOX
	MUSHROOM HEAD PUSH BUTTON
PP	PHOTO CELL
C	WALL MOUNTED CLOCK HANGER/ POWER RECEPTACLE
OS	CORNER WALL MOUNTED OCCUPANCY SENSOR
OS 1	CEILING MOUNTED OCCUPANCY SENSOR, STYLE 1
OS 2	CEILING MOUNTED OCCUPANCY SENSOR, STYLE 2
OS 3	CEILING MOUNTED OCCUPANCY SENSOR, STYLE 3
PP PP	OCCUPANCY SENSOR POWER PACK, BOX INDICATES WALL MOUNTING
	SPECIAL PURPOSE CONNECTION, BRACKET INDICATES WALL MOUNTING, BOX INDICATES FLOOR MOUNTING
J	JUNCTION BOX, BRACKET INDICATES WALL MOUNTING, BOX INDICATES FLOOR MOUNTING
M	MOTOR CONNECTION
R	RELAY
	NON-FUSED DISCONNECT SWITCH
	FUSED DISCONNECT SWITCH
	COMBINATION STARTER/DISCONNECT SWITCH
	CONTACTOR
$M	MANUAL MOTOR STARTER
AS	AQUASTAT BY PLUMBING CONTRACTOR, WIRED BY EC.
VFD	VARIABLE FREQUENCY DRIVE
CO2	CO2 DETECTOR BY MC, ROUGH-IN BY EC
T	THERMOSTAT BY MC, ROUGH-IN BY EC
	PAD MOUNTED UTILITY TRANSFORMER
	ELECTRICAL PANEL - SEE PANEL SCHEDULES FOR MOUNTING CONFIGURATION

ELECTRICAL ABBREVIATIONS

A	AMP(S)	LTS	LIGHTS
ACCU	AIR CONDITIONING CONDENSING UNIT	LW	LIGHT WHITE
ACU	AIR CONDITIONING UNIT		
ADJ	ADJUSTABLE	MC	MECHANICAL CONTRACTOR
ADMIN	ADMINISTRATION	MOC	MOMENTARY CONTACT
AFF	ABOVE FINISH FLOOR	MCB	MAIN CIRCUIT BREAKER
AHU	AIR HANDLING UNIT	MDP	MAIN DISTRIBUTION PANEL
AL	ALUMINUM	MECH	MECHANICAL
AMP	AMPERE(S)	MIN	MINIMUM
APPL	APPLIANCE	MLO	MAIN LUGS ONLY
APPROX	APPROXIMATE	MTD	MOUNTED
ATS	AUTOMATIC TRANSFER SWITCH	MFA	MINIMUM FEEDER AMPACITY
		MFG	MANUFACTURER
BLDG	BUILDING	MTS	MOTOR THERMAL SWITCH
BRK	BREAKER		
BTU/HR	BRITISH THERMAL UNIT/HOUR	NIC	NOT IN CONTRACT
		NO	NUMBER
C	CONDUIT		
CB	CIRCUIT BREAKER	OCP	OVER CURRENT PROTECTION
CCT	CIRCUIT	OFF	OFFICE
CCTV	CLOSED CIRCUIT TELEVISION	OH	OVERHEAD
CUH	CABINET UNIT HEATER		
CFM	CUBIC FEET PER MINUTE	PH	PHASE
COM	COMMUNICATION	PNL	PANEL
COMM	COMMISSARY	PREP	PREPARATION
COMP	COMPRESSOR	PROD	PRODUCE
COND	CONDENSER	P/I	PROVIDE & INSTALL
CONTR	CONTRACTOR		
CU	COPPER	RA	REMOTE ANNUNCIATOR
CTV	CABLE TELEVISION	RAF	RETURN AIR FAN
CW	COOL WHITE	RECP	RECEPTACLE
CWP	COLD WATER PUMP	RECPTS	RECEPTACLES
		REF	REFRIGERATOR
DIA	DIAMETER	REFR	REFRIGERANT
DISC	DISCONNECT	REQD	REQUIRED
DWG	DRAWING	RM	ROOM
		RMS	ROOM(S)
EC	ELECTRICAL CONTRACTOR	RR	RESTROOMS
ECM	ELECTRONICALLY COMMUTATED MOTOR	RS	RAPID START
EF	EXHAUST FAN		
ELECT	ELECTRIC, ELECTRICAL	SDP	SUB DISTRIBUTION PANEL
EMD	ESTIMATED MAXIMUM DEMAND	SER	SERVICE
EMER	EMERGENCY	SF	SUPPLY FAN
ENGR	ENGINEER	SHT	SHEET
EWC	ELECTRIC WATER COOLER	SN	SOLID NEUTRAL
EXT	EXTERIOR	SP	SWITCH, PILOT
		SPECS	SPECIFICATIONS
FA	FIRE ALARM	SPST	SWITCH, SINGLE POLE-SINGLE THROW
FAC	FACILITY		
FACP	FIRE ALARM CONTROL PANEL	STD	STANDARD
FIX	FIXTURE	STL	STEEL
FLA	FULL LOAD AMPS	STOR	STORAGE
FT	FOOT	SW	SWITCH
GC	GENERAL CONTRACTOR	TBD	TELEPHONE BACK BOARD
GFCI	GROUND FAULT CIRCUIT INTERRUPTER	TV	TELEVISION
GFI	GROUND FAULT INTERRUPTER	TYP	TYPICAL
HP	HORSEPOWER	UG	UNDERGROUND
HPS	HIGH PRESSURE SODIUM	UGE	UNDERGROUND ELECTRICAL
HID	HIGH INTENSITY DISCHARGE	UGT	UNDERGROUND TELEPHONE
HT	HEIGHT	UH	UNIT HEATER
HTRS	HEATERS		
HW	HOT WATER	V	VOLT(S)
HWH	HOT WATER HEATER	VA	VOLT AMPERES
HWP	HOT WATER PUMP	VFD	VARIABLE FREQUENCY DRIVE
HZ	HERTZ		
		W	WIRE
INC	INCORPORATED	W	WATT(S)
		W/	WITH
J-BOX	JUNCTION BOX	WAP	WIRELESS ACCESS POINT
		WM	WATT MISER
KHZ	KILOHERTZ		
KIT	KITCHEN	XFMR	TRANSFORMER
KVA	KILIVOLT AMPERE(S)		
KW	KILOWATT(S)		

ELECTRICAL SHEET LIST

E001	ELECTRICAL COVER SHEET
E002	ELECTRICAL SCHEDULES
E003	ELECTRICAL SCHEDULES
E101	ELECTRICAL POWER AND SPECIAL SYSTEMS PLAN
E102	ELECTRICAL LIGHTING PLAN
E301	ELECTRICAL DETAILS
E302	ELECTRICAL DETAILS
ES101	ELECTRICAL SITE PLAN

GENERAL ELECTRICAL NOTES (APPLY TO ALL DRAWINGS)

A	ALL WORK SHALL COMPLY WITH THE FOLLOWING: (1) THE LATEST ADOPTED EDITION OF THE NATIONAL FIRE PROTECTION ASSOCIATION (NFPA) AND INTERNATIONAL CODES, (2) THE LATEST EDITION OF NATIONAL ELECTRICAL MANUFACTURER'S ASSOCIATION (NEMA) STANDARDS, TIA/EIA STANDARDS, ANSI/BICSI STANDARDS, UNDERWRITER LABORATORIES, INC. (UL) LISTINGS, AND (3) ALL APPLICABLE LOCAL AND REGIONAL CODES.
B	CONTRACTOR SHALL BE RESPONSIBLE FOR OBTAINING ALL PERMITS ASSOCIATED WITH THIS PROJECT ON BEHALF OF THE OWNER.
C	CONTRACTOR SHALL RECOGNIZE THAT PROJECT SCOPE INCLUDES ALL PROJECT CONTRACT DOCUMENTS (DRAWINGS AND SPECIFICATIONS). THE DRAWINGS AND SPECIFICATIONS SHALL BE TAKEN TOGETHER AS ONE. CONTRACTOR SHALL PROVIDE WORK SPECIFIED AND NOT INDICATED OR WORK INDICATED AND NOT SPECIFIED AS THOUGH MENTIONED IN BOTH.
D	CONTRACTORS ARE TO COORDINATE ALL WORK WITH THE OWNER. CLEAN ALL DEBRIS FROM THE CONSTRUCTION SITE TO THE SATISFACTION OF THE OWNER. REFERENCE SPECIFICATIONS FOR ADDITIONAL REQUIREMENTS.
E	GROUND CONTINUITY OF GROUND THROUGHOUT THE SYSTEM SHALL BE PROVIDED. SYSTEM GROUND TO COMPLY WITH NEC REQUIREMENTS. RACEWAY SHALL NOT BE RELIED UPON FOR SOLE EQUIPMENT GROUNDING MEANS. ALL RACEWAY (CONDUIT, CABLETRAY, SURFACE RACEWAY, ETC) SHALL HAVE CONTINUOUS GROUND THROUGHOUT RACEWAY SYSTEM, SIZE PER NEC. CONTRACTOR SHALL ENSURE AND CONDUCT ALL PERFORMANCE CRITERIA AND TESTING OF GROUNDING SYSTEM PER NFPA. REFERENCE SPECIFICATIONS FOR ADDITIONAL REQUIREMENTS.
F	CONTRACTOR SHALL REPLACE ANY ACOUSTICAL CEILING TILES, PORTIONS OF THE SUSPENSION SYSTEM OR EXPOSED GRID SYSTEM DAMAGED BY HIS WORK.
G	ALL CONDUIT PENETRATING FIRE WALLS, FIRE BARRIERS, SMOKE BARRIERS, OR FIRE PARTITIONS SHALL COMPLY WITH APPLICABLE BUILDING CODES AND SHALL BE SEALED TIGHT WITH AN APPROVED FIRE STOP SEALANT RESTORING THE WALL/BARRIER/PARTITION TO ITS ORIGINAL RESISTANCE, REFERENCE SPEC SECTION 078400. UNLESS OTHERWISE NOTED ON DRAWINGS, ALL WALL, CEILING, AND FLOOR SLAB PARTITIONS SHALL BE CONSIDERED AS FIRE RATED PATCHED ACCORDINGLY.
H	NO ELECTRICAL CONDUIT SHALL BE RUN EXPOSED IN FINISHED AREAS. CONTRACTOR TO USE SURFACE METALLIC RACEWAYS FOR POWER AND LIMITED VOLTAGE TECHNOLOGY SYSTEMS WHERE INDICATED OR REQUIRED.
I	BRANCH CIRCUITS SHALL BE MINIMUM #12 CONDUCTOR AND 3/4" CONDUIT. UPSIZE CONDUIT/CONDUCTORS FOR OCPD, VOLTAGE DROP, ETC AS REQUIRED BY THE NEC.
J	ALL CABLING LOCATED IN THE CEILING SPACE SHALL BE PLENUM RATED UNLESS IT IS COMPLETELY INSTALLED IN CONDUIT. THIS INCLUDES BUT IS NOT LIMITED TO ALL LIMITED VOLTAGE TECHNOLOGY SYSTEM CABLING (EXCEPT FIRE ALARM CABLING WHICH SHALL BE INSTALLED IN CONDUIT) AND OCCUPANCY SENSOR/LIGHTING CONTROL CABLING.

ACE INC
ASSOCIATED • CONSTRUCTION • ENGINEERING
2040 HARNISH BLVD.
BILLINGS, MT 59102
406-245-0136
ACE JOB 21BL5444

REGISTERED PROFESSIONAL ENGINEER
CHRISTOPHER B. GREEN
PE-5174
DATE 5/9/2022
NORTH DAKOTA

LONG LAKE NWR

ELECTRICAL COVER SHEET

NEW HEADQUARTERS AND VISITOR CENTER

SUB-SHEET E001

DESIGNED	DRAWN	CHECKED	DATE	DRAWING NO.	SHEET
CG	CG	PK	2022.05.09		53 OF 66

Panel: N1L

Location: MECHANICAL 100
Supply From: UT1
Mounting: Surface
Enclosure: 1

Volts: 120/240 Single
Phases: 1
Wires: 3

A.I.C. Rating: 65.000
Mains Type: Main Circuit Breaker
Buss Rating: 400 A
MCB Rating: 400 A

Notes: PROVIDE WITH 400A/2P, ELECTRONIC TRIP LSIG 65KAIR MAIN CIRCUIT BREAKER.

CKT	Load Name	Trip	Poles	A		B		Poles	Trip	Load Name	CKT
1	RM100 MECH/ELEC RCPTS	20 A	1	540	27812			2	225 A	ATS	2
3	RM101 CONFERENCE/BREAK RCPTS	20 A	1			1080	27916	--	--	--	4
5	RM102 STORAGE RCPTS	20 A	1	720	2000			2	50 A	RM101 CONF/BREAK RANGE	6
7	RM101 CONF/BREAK SMALL APPL CKT #1	20 A	1			1500	2000	--	--	--	8
9	RM101 CONF/BREAK SMALL APPL CKT #2	20 A	1	1500	180			1	20 A	RM101 CONF/BREAK MICROWAVE	10
11	RM103 RESTROOM RCPT+IR+HAND DRYER	20 A	1			1630	180	1	20 A	RM101 CONF/BREAK GARBAGE DISPOSER	12
13	RM104 RESTROOM RCPT+IR+HAND DRYER	20 A	1	1750	1750			1	20 A	RM123 RESTROOM RCPT+IR+HAND DRYER	14
15	RM107 VISITOR CONTACT RCPTS	20 A	1			540	360	1	20 A	RM124 JANITOR RCPT	16
17	RM107 VISITOR CONTACT RCPTS	20 A	1	540	360			1	20 A	EXTERIOR RCPT (N),(S)	18
19	RM107 VISITOR CONTACT RCPTS	20 A	1			360	540	1	20 A	EXTERIOR RCPT (W)	20
21	RM107 VISITOR CONTACT FLOORBOX RCPTS	20 A	1	720	180			1	20 A	EXTERIOR RCPT (E)	22
23	RM105 HALL RCPTS	20 A	1			690	659	1	20 A	RM111,113,114,115,116,121,123,124 LTG	24
25	RM108 WORK ROOM RCPTS	20 A	1	1080	716			1	20 A	RM102,103,104,107 LIGHTING	26
27	RM109 ADMIN RCPTS	20 A	1			360	951	1	20 A	RM108,109,112,117,118 LIGHTING	28
29	RM110 HALL RCPTS	20 A	1	360	58			1	20 A	FLAGPOLE LTG	30
31	RM111 OFFICE RCPTS	20 A	1			720	326	1	20 A	PARKING LOT LIGHTING	32
33	RM112 OPEN OFFICE RCPTS	20 A	1	720	0			1	20 A	SPARE	34
35	RM112 OPEN OFFICE RCPTS	20 A	1			720	0	1	20 A	SPARE	36
37	RM112 OPEN OFFICE RCPTS	20 A	1	720	0			1	20 A	SPARE	38
39	RM112 OPEN OFFICE RCPTS	20 A	1			720	0	1	20 A	SPARE	40
41	RM113 OFFICE RCPTS	20 A	1	540	0			1	20 A	SPARE	42
43	RM114 OFFICE RCPTS	20 A	1			540	0	1	20 A	SPARE	44
45	RM115 OFFICE RCPTS	20 A	1	540	0			1	20 A	SPARE	46
47	RM116 OFFICE RCPTS	20 A	1			720	0	1	20 A	SPARE	48
49	RM117 STORAGE RCPTS	20 A	1	720	0			1	20 A	SPARE	50
51	RM118 LOCKER RCPTS	20 A	1			360	0	1	20 A	SPARE	52
53	RM112,119 HALL RCPTS	20 A	1	540	0			1	20 A	SPARE	54
			Total Load:	44045 VA		42872 VA					
			Total Amps:	367 A		357 A					

Legend:

Load Classification	Connected Load	Demand Factor	Estimated Demand	Panel Totals	
Motor	18397 VA	110.74%	20372 VA		
Other	0 VA	0.00%	0 VA	Total Conn. Load:	86917 VA
Receptacle	51373 VA	59.73%	30687 VA	Total Est. Demand:	67093 VA
Power	9710 VA	100.00%	9710 VA	Total Conn.:	362 A
Lighting	4258 VA	100.00%	4258 VA	Total Est. Demand:	280 A

Notes:

GENERAL REQUIREMENTS: PROVIDE NFPA 70-2020 ART 110.21(B) COMPLIANT HAZARD MARKINGS (ARC FLASH AND SHOCK HAZARD) IN ACCORDANCE WITH SPEC SECTION 262416 3.2S REQUIREMENTS. THE HAZARD MARKINGS MAY BE EITHER FIELD OR FACTORY APPLIED. PROVIDE FIELD MARKINGS, PHENOLIC LABEL WHITE TEXT ON BLACK BACKGROUND, OF AVAILABLE SHORT CIRCUIT CURRENT IN COMPLIANCE WITH NFPA 70-2020 ART 110.24 AND IN ACCORDANCE WITH SPEC SECTION 262416 3.2R REQUIREMENTS. PROVIDE PHENOLIC LABEL (WHITE TEXT ON BLACK BACKGROUND) WITH PANELBOARD NAME AND ELECTRICAL CHARACTERISTICS (208Y/120V, 400A, 3PH4W) ON FRONT OF PANELBOARD.

Panel: G1L

Location: MECHANICAL 100
Supply From: ATS
Mounting: Surface
Enclosure: 1

Volts: 120/240 Single
Phases: 1
Wires: 3

A.I.C. Rating: 22.000A
Mains Type: MLO
Buss Rating: 400 A

Notes:

CKT	Load Name	Trip	Poles	A		B		Poles	Trip	Load Name	CKT
1	RM101 CONFERENCE/BREAK RCPTS	20 A	1	1440 VA	6670 VA			2	90 A	CONDENSING UNIT CU-1	2
3	RM101 CONFERENCE/BREAK REFRIGERATOR	20 A	1			1500 VA	6670 VA	--	--	--	4
5	RM109 ADMIN RCPTS	20 A	1	720 VA	3950 VA			2	50 A	LP VAPORIZER V-1	6
7	RM111 OFFICE RCPTS	20 A	1			720 VA	3950 VA	--	--	--	8
9	RM112 OPEN OFFICE RCPTS	20 A	1	720 VA	2116 VA			2	40 A	RM100 FAN COIL FC-1	10
11	RM112 OPEN OFFICE RCPTS	20 A	1			1080 VA	2116 VA	--	--	--	12
13	RM112 OPEN OFFICE RCPTS	20 A	1	720 VA	790 VA			2	20 A	RM100 HOT WATER PUMP HWP-2	14
15	RM112 OPEN OFFICE RCPTS	20 A	1			720 VA	790 VA	--	--	--	16
17	RM114 OFFICE RCPTS	20 A	1	720 VA	790 VA			2	20 A	RM100 HOT WATER PUMP HWP-1	18
19	RM116 OFFICE RCPTS	20 A	1			360 VA	790 VA	--	--	--	20
21	RM120 FIRE ALARM CONTROL PANEL FACP	20 A	1	720 VA	1200 VA			1	20 A	RM100 BOILER B-1, BOILER PUMP BP-1	22
23	RM120 IT RCPTS	20 A	1			720 VA	1200 VA	1	20 A	RM100 BOILER B-2, BOILER PUMP BP-2	24
25	EXTERIOR ENGINE BLOCK HTR RCPT 1	20 A	1	180 VA	860 VA			1	20 A	RM100 ZONE PUMPS ZP-1, ZP-2	26
27	EXTERIOR ENGINE BLOCK HTR RCPT 2	20 A	1			180 VA	1290 VA	1	20 A	RM117 ZONE PUMPS ZP-3, ZP-4, ZP-6	28
29	EXTERIOR ENGINE BLOCK HTR RCPT 3	20 A	1	180 VA	830 VA			1	20 A	RM100 AUTO GYLCOL FEEDER AGF-1	30
31	EXTERIOR ENGINE BLOCK HTR RCPT 4	20 A	1			180 VA	205 VA	1	20 A	RM100 DOMESTIC WATER HTR DWH-1	32
33	SPARE	20 A	1	0 VA	242 VA			1	20 A	RM100 EXHAUST FAN EF-6	34
35	EXTERIOR BLDG LIGHTING	20 A	1			348 VA	216 VA	1	20 A	RM100 DDC PANEL	36
37	RM100 LIGHTING CONTACTOR	20 A	1	240 VA	120 VA			1	20 A	RM100 BOILER EMERGENCY SHUTDOWN	38
39	RM100,101,105,106 LTG+107 EMER EGR LTG	20 A	1			739 VA	90 VA	2	30 A	RM120 IT RCPT	40
41	RM112,119,120,122 LIGHTING	20 A	1	461 VA	90 VA			--	--	--	42
43	SPARE	20 A	1			0 VA	2500 VA	2	30 A	ENGINE/GENERATOR PANEL	44
45	PUMP-1	20 A	2	1553 VA	2500 VA			--	--	--	46
47	--	--	--			1553 VA					48
49	SPARE	20 A	1	0 VA	0 VA			1	20 A	SPARE	50
51	SPARE	20 A	1			0 VA	0 VA	1	20 A	SPARE	52
53	SPARE	20 A	1	0 VA	0 VA			1	20 A	SPARE	54
			Total Load:	27812 VA		27916 VA					
			Total Amps:	232 A		233 A					

Legend:

NOTE 1: FOR G1L-21, PROVIDE RED HANDLE LOCKABLE BREAKER FOR MCCB SHOWN. LABEL PER NFPA 72 REQUIREMENTS. NOTE 2: FOR G1L-2,4, PROVIDE 2#4,#8G,1"C. NOTE 3: FOR G1L-10,12 PROVIDE 2#8,#10G,3/4"C.

Load Classification	Connected Load	Demand Factor	Estimated Demand	Panel Totals	
Kitchen Equipment - Non-Dwelling Unit	0 VA	0.00%	0 VA		
Motor	18397 VA	110.74%	20372 VA	Total Conn. Load:	55728 VA
Other	0 VA	0.00%	0 VA	Total Est. Demand:	47371 VA
Receptacle	30663 VA	66.31%	20332 VA	Total Conn.:	232 A
Power	5120 VA	100.00%	5120 VA	Total Est. Demand:	197 A
Lighting	1548 VA	100.00%	1548 VA		

Notes:

GENERAL REQUIREMENTS: PROVIDE NFPA 70-2020 ART 110.21(B) COMPLIANT HAZARD MARKINGS (ARC FLASH AND SHOCK HAZARD) IN ACCORDANCE WITH SPEC SECTION 262416 3.2S REQUIREMENTS. THE HAZARD MARKINGS MAY BE EITHER FIELD OR FACTORY APPLIED. PROVIDE FIELD MARKINGS, PHENOLIC LABEL WHITE TEXT ON BLACK BACKGROUND, OF AVAILABLE SHORT CIRCUIT CURRENT IN COMPLIANCE WITH NFPA 70-2020 ART 110.24 AND IN ACCORDANCE WITH SPEC SECTION 262416 3.2R REQUIREMENTS. PROVIDE PHENOLIC LABEL (WHITE TEXT ON RED BACKGROUND) WITH PANELBOARD NAME AND ELECTRICAL CHARACTERISTICS (208Y/120V, 225A, 3PH4W) ON FRONT OF PANELBOARD.

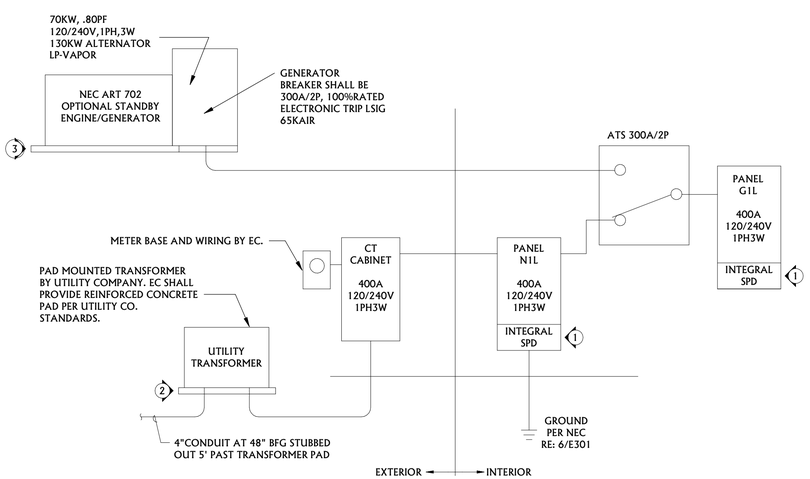

1 / E002 ONE-LINE RISER DIAGRAM
NOT TO SCALE

FEEDER SCHEDULE

FEEDER AMPS	CONDUIT AND FEEDER	FEEDING THESE DEVICES
400	2-2"C EA W/ 2#3/0,#3/0N,#2G	N1L, ATS, G1L
400	2-2"C EA W/ 2#3/0,#3/0N	CT CABINET, MAIN DISCONNECT

SIZING METHOD: COPPER, 60°C #12 THROUGH #1, 75°C 1/0 AND ABOVE

GENERAL ELECTRICAL NOTES:

A. ELECTRICAL CONTRACTOR SHALL COORDINATE ALL UTILITY REQUIREMENTS, FINAL LOCATIONS AND LOAD INFORMATION WITH ELECTRIC UTILITY.

KEY ELECTRICAL NOTES:

1. PROVIDE INTEGRAL SURGE PROTECTION IN MAIN PANEL, REFER TO SPECIFICATIONS FOR REQUIREMENTS.
2. PROVIDE CONCRETE PAD OR VAULT PER UTILITY COMPANY REQUIREMENTS. REFER TO SITE PLAN FOR TRANSFORMER LOCATION.
3. PROVIDE CONCRETE PAD FOR ENGINE/GENERATOR IN COMPLIANCE WITH ENGINE/GENERATOR MANUFACTURER REQUIREMENTS.

ACE INC
ASSOCIATED • CONSTRUCTION • ENGINEERING
2040 HARNISH BLVD.
BILLINGS, MT 59102
406-245-0136
ACE JOB 21BL5444

REGISTERED PROFESSIONAL ENGINEER
CHRISTOPHER B. GREEN
PE-5174
DATE 5/9/2022
NORTH DAKOTA

LONG LAKE NWR

ELECTRICAL SCHEDULES

NEW HEADQUARTERS AND VISITOR CENTER

DESIGNED	DRAWN	CHECKED	DATE	DRAWING NO.	SUB-SHEET	SHEET
CG	CG	PK	2022.05.09		E002	54 OF 66

LUMINAIRE SCHEDULE

FIXT TYPE LETTER	MANUFACTURER	MODEL NUMBER	MOUNTING	COLOR TEMP	LUMENS	VOLTS	WATTS	DESCRIPTION
A	LITHONIA OR EQUAL	2BTL4-60LHE-ADSM-EZ1-LP835	REC/LAY-IN	3500K	5815		43	
A2	LITHONIA OR EQUAL	2BTL4-60LHE-ADSM-EZ1-LP835-DGA	REC/FLANGE	3500K	5815		43	
A2E	LITHONIA OR EQUAL	2BTL4-60LHE-ADSM-EZ1-LP835-EL14LSD-DGA	REC/FLANGE	3500K	5815		43	
AA	LITHONIA OR APPROVED SUBSTITUTION	DSX1LED-P6-50K-T4M-MVOLT-SPA-SF-DBLXD	POLE	5000K	18635		163	
AE	LITHONIA OR EQUAL	2BTL4-60LHE-ADSM-EZ1-LP835-EL14LSD	REC/FLANGE	3500K	5815		43	
B	LITHONIA OR EQUAL	2GTL-4-60L-RW-A12125-EZ1-LP835	REC/LAY-IN	3500K	6218		49	
B2	LITHONIA OR EQUAL	2GTL-F-4-60L-RW-A12125-EZ1-LP835	REC/FLANGE	3500K	6218		49	
B2E	LITHONIA OR EQUAL	2GTL-F-4-60L-RW-A12125-EZ1-LP835-EL14L	REC/FLANGE	3500K	6218		49	
BB	HYDREL OR APPROVED SUBSTITUTION	M9720C-B-LED-P1-50K-MVOLT-NSP-FLC-34S-RG-STR	IN-GRADE	5000K	2212		19	
BE	LITHONIA OR EQUAL	2GTL-4-60L-RW-A12125-EZ1-LP835-EL14LSD	REC/LAY-IN	3500K	6218		49	
C	LITHONIA OR EQUAL	EVO6-35/25-AR-MWD-LS-MVOLT-GZ10	CEIL/REC	3500K	2537		25	
CC	LITHONIA OR APPROVED SUBSTITUTION	DSXW1LED-10C-530-50K-TFTM-MVOLT-DDBXD	WALL/SURFACE	5000K	2212		20	
D	EUREKA OR APPROVED SUBSTITUTION	3545-24-LED-SHO-35-80-120V-DV-WI-WHE-WH	WALL/SURFACE	3500K	2411		19	
DD	LITHONIA OR APPROVED SUBSTITUTION	DSXW1LED-20C-530-50K-TFTM-MVOLT-DDBXD	WALL/SURFACE	5000K	4394		36	
DDE	LITHONIA OR APPROVED SUBSTITUTION	DSXW1LED-20C-530-50K-TFTM-MVOLT-DDBXD-ELCW	WALL/SURFACE	5000K	4394		36	
E3	LITHONIA OR EQUAL	ECRG-HO-SQ-M6ECRG-HO-SQ-M6ECRG-HO-SQ-M6	UNIVERSAL	4000KDRIVER	LED	UNIVERSAL	5	DIE-CAST SINGLE FACE LED EXIT SIGN W/ EM SELF DIAGNOSTIC BATTERY PACK
E3A	LITHONIA OR EQUAL	ERE-GY-T-SQ-WP	WALL/SURFACE	4000K			0	
F	LITHONIA OR EQUAL	ZL1N-L48-7000LM-FST-MVOLT-50K-80CRI-WH-HC36	CHAIN-HUNG	5000K	7035		52	
FE	LITHONIA OR EQUAL	ZL1N-L48-7000LM-FST-120-50K-80CRI-E7W-WH-HC36	CHAIN-HUNG	5000K	7035		52	
G	PEERLESS OR APPROVED SUBSTITUTION	BRM9L-LSL-4FT-MSL4-80CRI-35K-ID1200LMF-40/60-MI N1-ZT-MVOLT-SCT-F2/MCSJ/72A-C210	SUSPENDED CABLE	3500K	4800		45	
H	JUNO OR EQUAL	UCES-24IN-SWW6-90CRI-WH-M6UCES-24IN-SWW6-90C RI-WH-M6	SURFACE	3500K	825	120	11	2' LED UNDERCABINET LIGHTING. WHITE HOUSING. COLOR TEMPERATURE SWITCH SELECTABLE, 90CRI
J	JUNO OR EQUAL	T254L-G2-35K-90CRI-PDIM-SP-WH	CEIL/TRACK	3500K	1252		15	

NOTE:
FOR TYPE AA LUMINAIRE, PROVIDE POLE LITHONIA SSS-30-6G-DM19AS-VD-DBLXD OR APPROVED SUBSTITUTION.

GENERAL REQUIREMENTS:
1. LUMINAIRE TYPES DEFINED WITH A MANUFACTURER'S SERIES FOLLOWED BY "OR EQUAL" DO NOT REQUIRE PRIOR APPROVAL FOR SUBSTITUTED PRODUCTS TO BID. HOWEVER, THIS DOES NOT ALLEVIATE THE SUBSTITUTED PRODUCT FROM MEETING OR EXCEEDING THE QUALITIES AND STANDARDS SET FORTH OF THE LISTED MANUFACTURER AND SERIES.
2. LUMINAIRE TYPES DEFINED WITH A MANUFACTURER'S SERIES FOLLOWED BY "OR APPROVED SUBSTITUTION" REQUIRE PRIOR APPROVAL FOR SUBSTITUTED PRODUCTS TO BID. HOWEVER, THIS DOES NOT ALLEVIATE THE SUBSTITUTED PRODUCT FROM MEETING OR EXCEEDING THE QUALITIES AND STANDARDS SET FORTH OF THE LISTED MANUFACTURER AND SERIES. ALL PRIOR APPROVAL SUBMITTALS SHALL INCLUDE A SUMMARY PAGE ON COMPANY LETTERHEAD WITH THE FOLLOWING TECHNICAL DATA: LUMENS (LM), WATTS (W), AND LUMENS/WATT (LPW) FOR EACH LUMINAIRE TYPE.

STARTER, DISCONNECT, AND CONTROL SCHEDULE

UNIT NO	MOTOR			STARTER			CONTROL		DISCONNECT		REMARKS/NOTES
	HP	VOLT PHASE	LOCATION	NEMA SIZE	TYPE	LOCATION	TYPE	LOCATION	SWITCH SIZE	FUSE SIZE	
V-1	7.9 kW	240/1	PROPANE TANKS	N/A	N/A	N/A	PRESSURE	AT UNIT	60A/2P	(2) 45AF	NOTE 1,4,6,7
DWH-1	205 VA	120/1	MECH/ELEC 100	FRACTIONAL	MTS	AT UNIT	THERMOSTAT	AT UNIT	30A/1P	N/A	
FC-1	23 MCA	230/1	MECH/ELEC 100	N/A	VFD	AT WALL	TC	AT UNIT	N/A	N/A	NOTE 1.2
CU-1	64 MCA	230/1	OUTSIDE BLDG	<---------- WITH UNIT ---------->			TC	AT UNIT	100A/2P	N/A	NOTE 3,9
PUMP-1	13.5 FLA	230/1	OUTSIDE BLDG	<---------- WITH UNIT ---------->			FLOAT	AT UNIT	30A/2P	N/A	NOTE 1, 7
B-1	1.2 kW	120/1	MECH/ELEC 100	<---------- WITH UNIT ---------->			THERMOSTAT	AT UNIT	N/A	N/A	NOTE 1
B-2	1.2 kW	120/1	MECH/ELEC 100	<---------- WITH UNIT ---------->			THERMOSTAT	AT UNIT	N/A	N/A	NOTE 1
BP-1	.12 kW	115/1	MECH/ELEC 100	FRACTIONAL	MTS	AT PUMP	B-1	AT UNIT	N/A	N/A	NOTE 1
BP-2	.12 kW	115/1	MECH/ELEC 100	FRACTIONAL	MTS	AT PUMP	B-2	AT UNIT	N/A	N/A	NOTE 1
HWP-1	3/4	230/1	MECH/ELEC 100	N/A	ECM	AT PUMP	TC	AT UNIT	30A/2P	N/A	NOTE 8
HWP-2	3/4	230/1	MECH/ELEC 100	N/A	ECM	AT PUMP	TC	AT UNIT	30A/2P	N/A	NOTE 8
ZP-1	1/8	115/1	MECH/ELEC 100	FRACTIONAL	MTS	AT UNIT	TC (RZ-1)	AT UNIT	30A/1P	N/A	NOTE 3
ZP-2	1/8	115/1	MECH/ELEC 100	FRACTIONAL	MTS	AT UNIT	TC (RZ-2)	AT UNIT	30A/1P	N/A	NOTE 3
ZP-3	1/8	115/1	STORAGE 117	FRACTIONAL	MTS	AT UNIT	TC (RZ-3)	AT UNIT	30A/1P	N/A	NOTE 3
ZP-4	1/8	115/1	STORAGE 117	FRACTIONAL	MTS	AT UNIT	TC (RZ-4)	AT UNIT	30A/1P	N/A	NOTE 3
ZP-6	1/8	115/1	STORAGE 117	FRACTIONAL	MTS	AT UNIT	TC (RZ-4)	AT UNIT	30A/1P	N/A	NOTE 3
AGF-1	1/3	115/1	MECH/ELEC 100	<---------- WITH UNIT ---------->			THERMOSTAT	AT UNIT	RCPT	N/A	NOTE 5
EF-1	.0345 kW	115/1	RESTROOM 103	<---------- WITH UNIT ---------->			OC	AT ROOM	N/A	N/A	NOTE 1
EF-2	.0345 kW	115/1	RESTROOM 104	<---------- WITH UNIT ---------->			OC	AT ROOM	N/A	N/A	NOTE 1
EF-3	.029 kW	115/1	LOCKER 118	<---------- WITH UNIT ---------->			WALL SWITCH	AT ROOM	N/A	N/A	NOTE 1
EF-4	.0345 kW	115/1	RESTROOM 123	<---------- WITH UNIT ---------->			OC	AT ROOM	N/A	N/A	NOTE 3
EF-5	.0345 kW	115/1	JANITOR 124	<---------- WITH UNIT ---------->			WALL SWITCH	AT ROOM	N/A	N/A	NOTE 1
EF-6	.242 kW	115/1	MECH/ELEC 100	FRACTIONAL	MTS	AT WALL	WALL SWITCH	AT ROOM	N/A	N/A	NOTE 3
CUH-1	.33 kW	120/1	VEST 106	N/A	N/A	N/A	THERMOSTAT	AT UNIT	N/A	N/A	NOTE 1

NOTE 1: SINGLE-POINT OF CONNECTION. ALL STARTERS, DISCONNECTS, THERMAL OVERLOADS, ETC ARE INTEGRAL WITH EQUIPMENT BY DIVISION 22/23.
NOTE 2: EQUIPMENT COMES WITH VFD BY DIVISION 22/23. VFD HAS INTEGRAL BYPASS STARTER AND DISCONNECT.
NOTE 3: EQUIPMENT COMES WITH INTEGRAL MOTOR STARTER.
NOTE 4: FUSE PER MANUFACTURER'S RECOMMENDATIONS.
NOTE 5: EQUIPMENT COMES WITH POWER SUPPLY CORD WITH NEMA 5-20P.
NOTE 6: CLASS I, DIV 1 EQUIPMENT BY DIVISION 22/23. CONNECT TO EXPLOSION PROOF BOX PROVIDED AT BASE OF EQUIPMENT.
NOTE 7: HEAVY-DUTY FUSED DISCONNECT SWITCH IS NEMA 3R RATED WITH LOCKING PROVISIONS.
NOTE 8: EQUIPMENT COMES WITH ECM BY DIVISION 22/23.
NOTE 9: HEAVY-DUTY NON-FUSED DISCONNECT SWITCH IS NEMA 3R RATED.

KEY:
B=HAND-OFF-AUTO SELECTOR SWITCH
FT = CONTROL XFMR 120V FUSED
FVNR= FULL VOLTAGE NON-REVERSING STARTER
ECM= ELECTRONICALLY COMMUTATED MOTOR
VFD= VARIABLE FREQUENCY DRIVE
MCA= MINIMUM CIRCUIT AMPACITY
G= GREEN "OFF" PILOT LIGHT
SPC= SINGLE POINT CONNECTION
FVR= FULL VOLTAGE REVERSING STARTER
MTS= MANUAL MOTOR STARTER WITH OVERLOAD PROTECTION & LOCK-OFF GUARD (MOTOR THERMAL SWITCH)
TC= TEMPERATURE CONTROL
R= RED "ON" PILOT LIGHT
OC= OCCUPANCY SENSOR
RVS= REDUCED VOLTAGE STARTER

PROVIDE ALL MOTORS OVER 5 HP WITH SOLID STATE OVERLOADS.
COORDINATE EXACT REQUIREMENTS WITH MECHANICAL SHOP DRAWINGS PRIOR TO ORDERING EQUIPMENT OR RUNNING FEEDERS.
PROVIDE ALL STARTERS WITH 2 N.O & 2 N.C. AUXILIARY INTERLOCKING RELAYS, NEMA SIZE 1 UNLESS OTHERWISE NOTED.

ACE INC
ASSOCIATED • CONSTRUCTION • ENGINEERING
2040 HARNISH BLVD.
BILLINGS, MT 59102
406-245-0136
ACE JOB 21BL5444

REGISTERED PROFESSIONAL ENGINEER
CHRISTOPHER B. GREEN
PE-5174
DATE 5/9/2022
NORTH DAKOTA

LONG LAKE NWR

ELECTRICAL SCHEDULES

NEW HEADQUARTERS AND VISITOR CENTER

SUB-SHEET E003

DESIGNED	DRAWN	CHECKED	DATE	DRAWING NO.	SHEET
CG	CG	PK	2022.05.09		55 OF 66

ELECTRICAL POWER AND SYSTEMS GENERAL NOTES

A	THE FIRE ALARM SYSTEM WIRING SHALL BE INSTALLED IN CONDUIT. DRAWINGS FOR THE FIRE ALARM SYSTEMS ARE DIAGRAMMATIC ONLY. EXACT WIRING REQUIREMENTS SHALL BE PROVIDED BY THE FA SYSTEM MANUFACTURER. REFERENCE DETAIL 5/E302 AND SPEC SECTION 283111 FOR ADDITIONAL REQUIREMENTS. FIRE ALARM DEVICES SHOULD BE MOUNTED CENTERED ABOVE SWITCHES WHENEVER POSSIBLE.
B	ALL LIMITED VOLTAGE TECHNOLOGY SYSTEM CABLING LOCATED WITHIN THE CEILING SPACE SHALL BE PLENUM RATED UNLESS IT IS COMPLETELY INSTALLED IN CONDUIT. ALL FIRE ALARM CABLING SHALL BE IN A FULL CONDUIT SYSTEM, NO EXCEPTIONS.
C	ALL ACCESS CONTROL SYSTEM DEVICES, CABLING, TERMINATION AND TESTING SHALL BE INSTALLED AS PART OF A SEPARATE PROJECT ADMINISTERED BY THE OWNER. EC SHALL PROVIDE ROUGH-IN AT LOCATIONS SHOWN AND PROVIDE 120VAC POWER AT LOCATIONS SHOWN. REFERENCE SPEC SECTION 270507 FOR ADDITIONAL REQUIREMENTS.
D	ALL VIDEO SURVEILLANCE SYSTEM DEVICES, CABLING, TERMINATION AND TESTING SHALL BE INSTALLED AS PART OF A SEPARATE PROJECT ADMINISTERED BY THE OWNER. REFERENCE SPEC SECTION 270507 FOR ADDITIONAL REQUIREMENTS.
E	FOR COMMUNICATIONS, AND TELEVISION SYSTEMS CONDUIT/CONDUCTORS, REFERENCE DETAIL 2/E301 FOR TYPICAL ROOM DETAILS AND REQUIREMENTS.

ELECTRICAL POWER AND SYSTEMS GENERAL NOTES

F	PROVIDE ALL COMMUNICATIONS OUTLETS PER DETAIL 1/E301 REQUIREMENTS.
G	ENSURE ALL EXTERIOR WALL PENETRATIONS HAVE A SLEEVE GROUTED INTO THE WALL AND THE CONDUIT ROUTED THROUGH THE SLEEVE IS CAULKED INTO THE SLEEVE.
H	ALL EXTERIOR RECEPTACLES SHALL HAVE A WEATHERPROOF WHILE-IN-USE EXTRA DUTY COVER IN ACCORDANCE WITH SPECIFICATION SECTION 262726 2.5D REQUIREMENTS.
I	REFERENCE ARCHITECTURAL PLANS FOR ADDITIONAL INFORMATION ON DEVICE LOCATIONS, DIMENSIONS, ETC. CAREFULLY EXAMINE ARCHITECTURAL FLOOR PLANS, CEILING PLANS, ELEVATIONS, ETC. FOR INFORMATION THAT AFFECTS ELECTRICAL WORK. NOTIFY ARCHITECT/ENGINEER IMMEDIATELY OF ANY DISCREPANCIES BETWEEN ARCHITECTURAL AND ELECTRICAL PLANS.
J	FOR EACH DIV 23 THERMOSTAT OR TEMPERATURE SENSOR, PROVIDE FOUR SQUARE BOX WITH SINGLE GANG MUD RING AND 3/4"C (WITH 1/2" MULE TAPE) UP TO A LOCATION ABOVE THE ACCESSIBLE CEILING. SELECT SINGLE GANG MUD RING TYPE DEPENDING UPON SHEETROCK DEPTH. FIELD COORDINATE EXACT LOCATION WITH DIV 23. REFERENCE DETAIL 3/E301 FOR ADDITIONAL INFORMATION AND REQUIREMENTS.

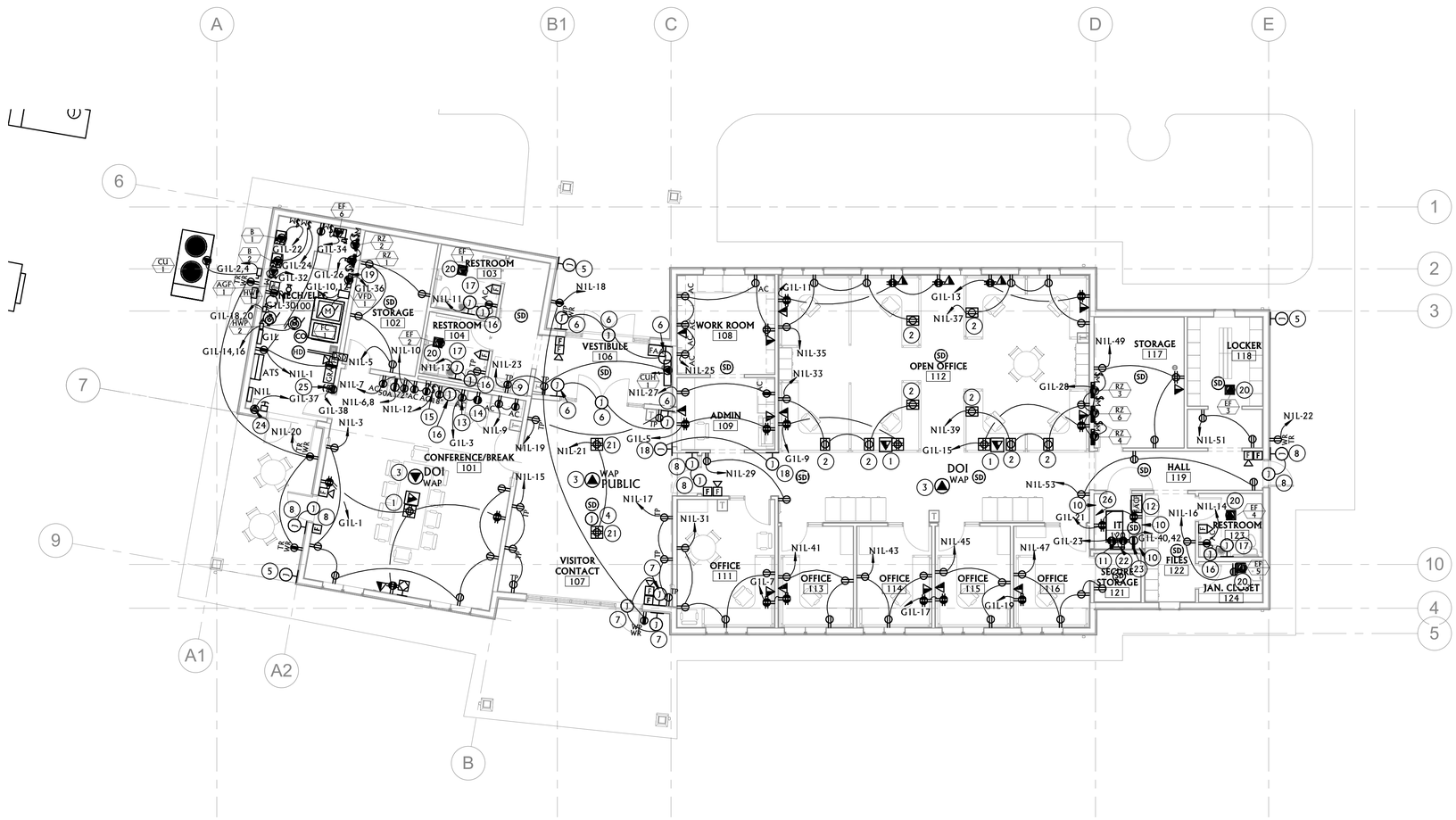

N

1 / E101 FIRST FLOOR ELECTRICAL POWER AND SPECIAL SYSTEMS PLAN

1/8" = 1'-0"

ELECTRICAL KEYNOTES

1	PROVIDE THREE-GANG FLOOR BOX IN COMPLIANCE WITH SPECIFICATIONS. PROVIDE TWO OPENINGS EACH WITH A GENERATOR POWER (RED) DUPLEX RECEPTACLE. PROVIDE ONE OPENING WITH 1 VOICE AND 1 DATA OUTLET. PROVIDE 3/4"C FOR EACH POWER OPENING FROM FLOOR BOX TO EMPTY JUNCTION BOX IN WALL. ROUTE CONDUIT IN FLOOR SLAB AND THEN UP WALL AND STUBBED TO CEILING SPACE. PROVIDE 1"C FOR VOICE/DATA OPENING FROM FLOOR BOX TO EMPTY JUNCTION BOX IN WALL. ROUTE CONDUIT IN FLOOR SLAB AND THEN UP WALL AND STUBBED TO CEILING SPACE. FIELD COORDINATE FINAL FLOOR BOX LOCATION WITH FINAL LOCATIONS OF ALL ROOM FURNITURE PRIOR TO INSTALLATION.
2	PROVIDE TWO-GANG FLOOR BOX IN COMPLIANCE WITH SPECIFICATIONS. PROVIDE ONE OPENING WITH A NORMAL POWER (LIGHT ALMOND) DUPLEX RECEPTACLE. PROVIDE ONE OPENING FOR FUTURE CABLING. PROVIDE 3/4"C FOR POWER OPENING FROM FLOOR BOX TO EMPTY JUNCTION BOX IN WALL. ROUTE CONDUIT IN FLOOR SLAB AND THEN UP WALL AND STUBBED TO CEILING SPACE. PROVIDE 1"C FOR FUTURE CABLING OPENING FROM FLOOR BOX TO EMPTY JUNCTION BOX IN WALL. ROUTE CONDUIT IN FLOOR SLAB AND THEN UP WALL AND STUBBED TO CEILING SPACE. FIELD COORDINATE FINAL FLOOR BOX LOCATION WITH FINAL LOCATIONS OF ALL ROOM FURNITURE PRIOR TO INSTALLATION.
3	PROVIDE 2 1/8" DEEP, 4" SQUARE JUNCTION BOX WITH A SINGLE-GANG MUD RING ABOVE ACCESSIBLE CEILING FOR FUTURE OFOI WIRELESS ACCESS POINT (WAP). PROVIDE TWO DATA DROPS AT LOCATION SHOWN. FIELD VERIFY EXACT LOCATION. PROVIDE ROUGH-IN AND 3/4"C TO NEAREST CORRIDOR LOCATION.
4	FOR FUTURE INTERIOR OFOI VSS CAMERA, PROVIDE 2 1/8" DEEP, 4" SQUARE JUNCTION BOX WITH A SINGLE-GANG MUD RING ABOVE ACCESSIBLE CEILING FOR FUTURE OFOI VSS CAMERA. PROVIDE TWO DATA DROPS AT LOCATION SHOWN. FIELD VERIFY EXACT LOCATION WITH OWNER AND GC. PROVIDE ROUGH-IN AND 3/4"C TO NEAREST CORRIDOR LOCATION.
5	FOR FUTURE EXTERIOR OFOI VSS CAMERA, PROVIDE WEATHERPROOF 2 1/8" DEEP, 4" SQUARE JUNCTION BOX WITH A SINGLE-GANG MUD RING RECESSED IN EXTERIOR WALL. PROVIDE TWO DATA DROPS AT LOCATION SHOWN. FIELD VERIFY EXACT LOCATION WITH OWNER AND GC. PROVIDE ROUGH-IN AND 3/4"C TO NEAREST CORRIDOR LOCATION. REFERENCE SPEC SECTION 270507 FOR ADDITIONAL REQUIREMENTS.
6	PROVIDE ROUGH-IN AT DOUBLE-DOOR AND CONDUIT AS REQUIRED FOR FUTURE OFOI ACCESS CONTROL SYSTEM DEVICES AND ADA DOOR OPERATOR AND ADA PUSH PLATES. FIELD COORDINATE WORK WITH GC AND OWNER. REFERENCE SPEC SECTION 270507 AND DIVISION 08 FOR ADDITIONAL REQUIREMENTS. COORDINATE WORK WITH DIVISION 08 AND PROVIDE ALL INTERCONNECTING CONDUIT REQUIRED BY DIVISION 08.
7	PROVIDE ROUGH-IN AT SINGLE-DOOR AND CONDUIT AS REQUIRED FOR FUTURE OFOI ACCESS CONTROL SYSTEM DEVICES AND ADA DOOR OPERATOR AND ADA PUSH PLATES. FIELD COORDINATE WORK WITH GC AND OWNER. REFERENCE SPEC SECTION 270507 AND DIVISION 08 FOR ADDITIONAL REQUIREMENTS. COORDINATE WORK WITH DIVISION 08 AND PROVIDE ALL INTERCONNECTING CONDUIT REQUIRED BY DIVISION 08.
8	PROVIDE ROUGH-IN AT SINGLE-DOOR AND CONDUIT AS REQUIRED FOR FUTURE OFOI ACCESS CONTROL SYSTEM DEVICES. FIELD COORDINATE WORK WITH GC AND OWNER. REFERENCE SPEC SECTION 270507 AND DIVISION 08 FOR ADDITIONAL REQUIREMENTS. COORDINATE WORK WITH DIVISION 08 AND PROVIDE ALL INTERCONNECTING CONDUIT REQUIRED BY DIVISION 08.
9	CONNECTION TO ELECTRIC WATER COOLER. COORDINATE EXACT LOCATION WITH EQUIPMENT INSTALLATION.
10	PROVIDE 3/4" PLYWOOD PAINTED WITH GRAY FIRE RETARDANT PAINT ON BOTH SIDES LINING THE WALLS SHOWN TO A HEIGHT OF 8 FEET.
11	PROVIDE #6AWG INSULATED COPPER GROUNDING CONDUCTOR (BONDING JUMPER) FROM 'TMGB' GROUND BAR TO IT RACK AS SHOWN.
12	INSTALL FIRE ALARM CONTROL PANEL (FACP) AND DIGITAL ALARM COMMUNICATOR TRANSMITTER (DACT). PROVIDE TO DACT, DUAL TELEPHONE LINES WITH VOLTAGE DETECTION PER SPEC SECTION 283111 REQUIREMENTS.
13	PROVIDE SPECIFICATION GRADE, DEAD FRONT 120V, 20A GFCI DEVICE IN A 1-GANG BOX MOUNTED IN READILY ACCESSIBLE LOCATION ABOVE COUNTER. DEVICE IS CONNECTED UPSTREAM OF REFRIGERATOR RECEPTACLE.
14	RECEPTACLE FOR FULL-HEIGHT REFRIGERATOR. FIELD COORDINATE EXACT MOUNTING HEIGHT AND LOCATION WITH EQUIPMENT INSTALLATION.
15	PROVIDE RECEPTACLE FOR GARBAGE DISPOSER. COORDINATE EXACT LOCATION WITH EQUIPMENT INSTALLATION. PROVIDE MOMENTARY MOTOR RATED WALL SWITCH MOUNTED ABOVE COUNTER TO CONTROL RECEPTACLE. SWITCH IS CONNECTED UPSTREAM OF RECEPTACLE.
16	PROVIDE NEMA5-20R GFCI RECEPTACLE OR HARD CONNECTION FOR LAVATORY OR SINK INFRARED SENSOR AS REQUIRED. COORDINATE EXACT REQUIREMENTS AND LOCATION WITH EQUIPMENT INSTALLATION.
17	PROVIDE ROUGH-IN FOR GC FURNISHED ELECTRIC HAND DRYER AT MOUNTING HEIGHT NOTED ON ARCHITECTURAL ELEVATIONS AND SPECIFICATION SECTION 102813. GC TO PROVIDE STRUCTURAL SUPPORT AND INSTALLATION OF ELECTRIC HAND DRYER. FIELD COORDINATE EXACT LOCATION AND REQUIREMENTS WITH EQUIPMENT INSTALLATION. PROVIDE MTS MOUNTED ABOVE ACCESS PANEL IN HARD CEILING AS SHOWN.
18	PROVIDE WALL ROUGH-IN FOR DOORBELL PUSHBUTTON AT RECEPTION AREA AND WALL ROUGH-IN FOR DOORBELL CHIME AT OFFICE AREA. PROVIDE 1/2"C WITH MULE TAPE FROM DOORBELL PUSHBUTTON TO DOORBELL CHIME AS SHOWN FOR DOORBELL CONDUCTORS. FURNISH AND INSTALL TRADITIONAL RESIDENTIAL TYPE DOORBELL SYSTEM. PROVIDE 120VAC POWER CONNECTION, JUNCTION BOXES AND 2#12,#12G,3/4"C AS REQUIRED.
19	CONNECTION FOR DDC PANEL. COORDINATE EXACT LOCATION WITH DIVISION 23 CONTRACTOR.
20	PROVIDE 2#12,#12G,3/4"C AS REQUIRED TO CONNECT EXHAUST FAN TO ROOM LIGHTING CIRCUIT.
21	PROVIDE TWO-GANG FLOOR BOX IN COMPLIANCE WITH SPECIFICATIONS. PROVIDE TWO OPENINGS EACH WITH A NORMAL POWER (LIGHT ALMOND) DUPLEX RECEPTACLE. PROVIDE 3/4"C FOR POWER OPENING FROM FLOOR BOX TO EMPTY JUNCTION BOX IN WALL. ROUTE CONDUIT IN FLOOR SLAB AND THEN UP WALL AND STUBBED TO CEILING SPACE. PROVIDE 1"C FOR FUTURE CABLING OPENING FROM FLOOR BOX TO EMPTY JUNCTION BOX IN WALL. ROUTE CONDUIT IN FLOOR SLAB AND THEN UP WALL AND STUBBED TO CEILING SPACE. FIELD COORDINATE FINAL FLOOR BOX LOCATION WITH FINAL LOCATIONS OF ALL ROOM FURNITURE PRIOR TO INSTALLATION.
22	PROVIDE 'TMGB' GROUND BAR IN ACCORDANCE WITH DETAILS 4/E301 AND 5/E301.
23	PROVIDE 2#10,#10G,3/4"C TO SINGLE RECEPTACLE NEMA L5-30R FOR IT RACK.
24	LIGHTING CONTACTOR AND 24 HOUR TIMECLOCK. REFERENCE DETAIL 3/E301.
25	PROVIDE 120V, 20A EMERGENCY POWER CIRCUIT FROM G1L FOR BOILER EMERGENCY SHUTDOWN PER DETAIL 1/E302 REQUIREMENTS. PROVIDE ALL PUSHBUTTONS, ELECTRICAL CONNECTIONS AND 2#12,#12G,3/4"C AS REQUIRED FOR A FULLY FUNCTIONING SYSTEM.
26	PROVIDE CATV DISTRIBUTION EQUIPMENT AT LOCATION SHOWN IN COMPLIANCE WITH THE REQUIREMENTS OF SPECIFICATION SECTION 275132.

ACE INC
ASSOCIATED • CONSTRUCTION • ENGINEERING
2040 HARNISH BLVD.
BILLINGS, MT 59102
406-245-0136
ACE JOB 21BL5444

REGISTERED PROFESSIONAL ENGINEER
CHRISTOPHER B. GREEN
PE-5174
DATE 5/9/2022
NORTH DAKOTA

LONG LAKE NWR

ELECTRICAL POWER AND SPECIAL SYSTEMS PLAN

NEW HEADQUARTERS AND VISITOR CENTER

SUB-SHEET E101

DESIGNED	DRAWN	CHECKED	DATE	DRAWING NO.	SHEET
CG	CG	PK	2022.05.09		56 OF 66

ELECTRICAL LIGHTING GENERAL NOTES

A	VERIFY THE EXACT LOCATION OF ALL LUMINAIRES WITH THE GENERAL CONTRACTOR PRIOR TO ROUGH-IN.
B	ENSURE ALL EXTERIOR WALL PENETRATIONS HAVE A SLEEVE GROUTED INTO THE WALL AND THE CONDUIT ROUTED THROUGH THE SLEEVE IS CAULKED INTO THE SLEEVE.
C	ALL CABLING LOCATED WITHIN THE CEILING SPACE SHALL BE PLENUM RATED UNLESS IT IS COMPLETELY INSTALLED IN CONDUIT. THIS INCLUDES, BUT IS NOT LIMITED TO: OCCUPANCY SENSOR/LIGHTING CONTROL CABLING.
D	FIRE SEAL ALL PENETRATIONS IN FIRE RATED WALLS. COORDINATE WITH ARCHITECT AND GC FOR LOCATIONS.
E	PROVIDE A COMPLETE WIRING SYSTEM CONSISTING OF PROPER QUANTITY OF SWITCH LEGS, NEUTRALS AND HOT CIRCUITS FOR A FUNCTIONAL INSTALLATION. ALL CIRCUITRY IS SHOWN FROM SWITCHES TO EACH CONTROLLED LUMINAIRE. EC SHALL MATCH SWITCH SUBSCRIPT TO ASSOCIATED LUMINAIRE AND CONNECT COMPLETE.
F	WHEN LIGHT SWITCHES ARE SHOWN LOCATED ON THE WALL THAT IS COMMON WITH THE END OF THE DOOR SWING INTO A SPACE. DO NOT LOCATE THE SWITCHES BEHIND THE DOOR, BUT RATHER A MINIMUM OF 6" FROM THE END OF THE SWING. VERIFY EXACT DOOR SWING PRIOR TO ROUGH-IN.
G	FOR ALL LUMINAIRES WITH AN EMERGENCY LED DRIVER/BATTERY PACK, PROVIDE HOT UNSWITCHED CONDUCTOR TO THE EMERGENCY LED DRIVER.
H	PROVIDE/INSTALL OCCUPANCY SENSORS AS SHOWN IN ACCORDANCE WITH MANUFACTURER'S RECOMMENDATIONS. OCCUPANCY SENSORS SHALL BE INSTALLED TO REDUCE FALSE TRIPS.
I	PROVIDE/INSTALL DIMMERS COMPATIBLE WITH LED LUMINAIRES CONTROLLED. PROVIDE ALL CONDUIT/CONDUCTORS AS REQUIRED FROM LED DIMMER TO LED LUMINAIRES. ALL IN ACCORDANCE WITH MANUFACTURER'S RECOMMENDATIONS.
J	CONNECT ALL OCCUPANCY SENSORS UPSTREAM OF ANY WALL SWITCHES SO THAT OCCUPANCY SENSOR RECEIVES CONTINUOUS UNSWITCHED POWER AND WALL SWITCH PROVIDES MANUAL/ LOCAL CONTROL. LUMINAIRES SHALL ONLY TURN ON IF SWITCHES ARE ON AND OCCUPANCY IS SENSED. EC SHALL WIRE ALL OCCUPANCY SENSOR SYSTEMS PER MANUFACTURERS RECOMMENDATIONS.
K	PROVIDE ALL LOW VOLTAGE WIRING REQUIRED TO CONNECT OCCUPANCY SENSORS IN A SPACE TO THE POWER PACK ASSOCIATED WITH AN INDIVIDUAL AREA. WIRING NOT SHOWN FOR DRAWING CLARITY.
L	WHERE MULTIPLE OCCUPANCY SENSORS ARE IN A SINGLE ROOM, CONNECT SO THAT ANY SENSOR TURNS ALL LUMINAIRES ON.

ELECTRICAL KEYNOTES

1	PHOTOCELL TO BE LOCATED ON EXTERIOR OF BUILDING ON THE ROOF. ORIENT PHOTOCELL TO FACE NORTH.
2	PROVIDE 2#12,#12G,1/2"C AS REQUIRED TO CONNECT TYPE E3 LUMINAIRE TO TYPE E3A REMOTE HEADS.
3	CONNECT EXTERIOR BUILDING LIGHTING CIRCUIT TO PANELBOARD G1L THRU LIGHTING CONTACTOR. REFERENCE DETAIL 3/E301.
4	PROVIDE SENSORSWITCH #WSD-V-A-LT OR APPROVED EQUAL PIR WALL SWITCH.
5	PROVIDE 0-10VDC DIMMING CONTROL TO LED LUMINAIRES. PROVIDE DUAL ON/OFF/DIM PUSH-BUTTON WALLPOD IN LOCATION AS SHOWN, AND ALL REQUIRED CONTROLS AND CONDUIT/CONDUCTORS.
6	COORDINATE EXACT LOCATION OF LUMINAIRES IN THIS ROOM WITH MECHANICAL EQUIPMENT, DUCTWORK AND PIPING. PROVIDE CHAIN LENGTH FOR EACH LUMINAIRE TO ENSURE A CONSISTENT AFF HEIGHT FOR ALL LUMINAIRES IN THE ROOM.

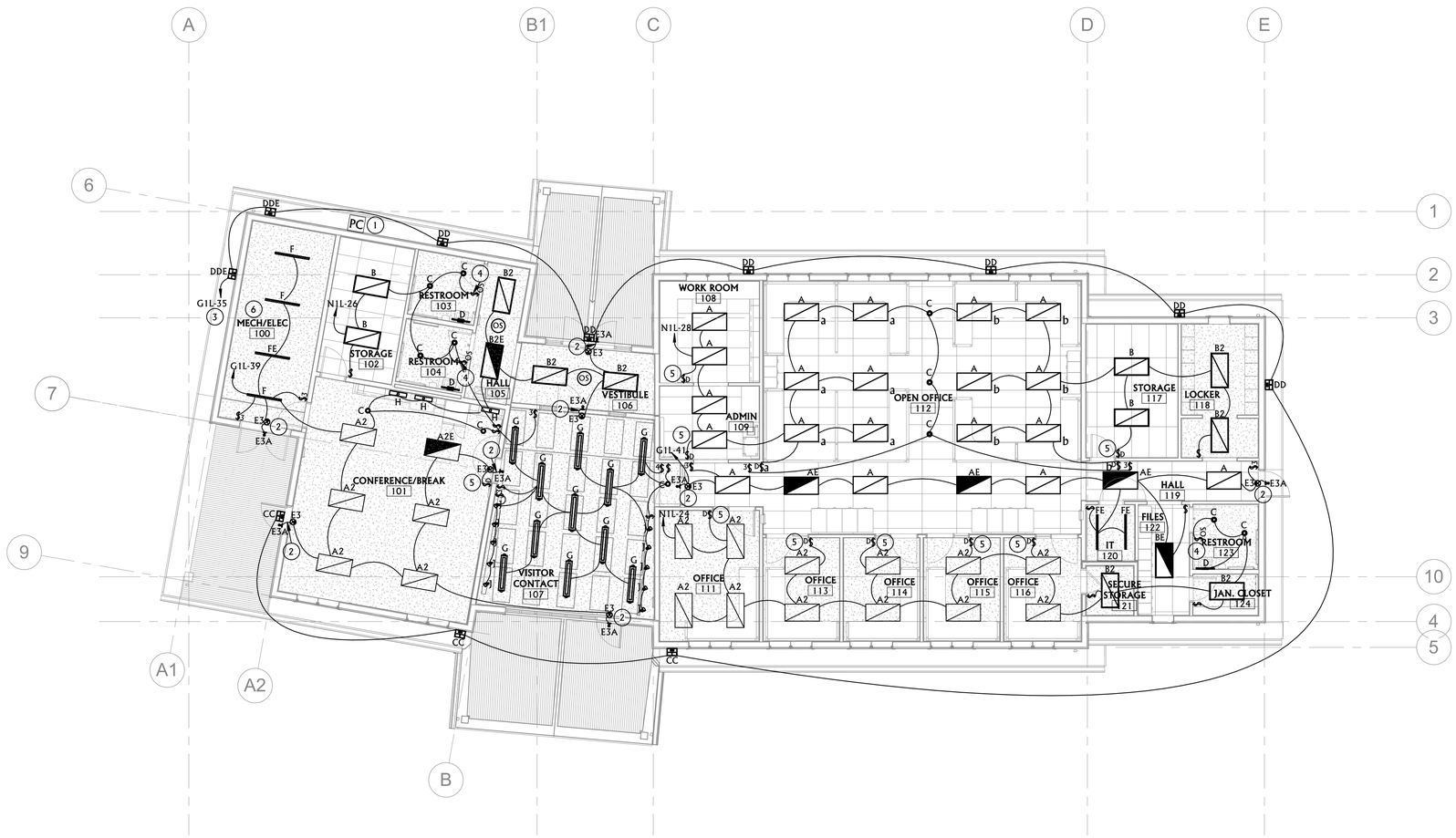

N

1 / E102 FIRST FLOOR ELECTRICAL LIGHTING PLAN

1/8" = 1'-0"

ACE INC
ASSOCIATED • CONSTRUCTION • ENGINEERING
2040 HARNISH BLVD.
BILLINGS, MT 59102
406-245-0136
ACE JOB 21BL5444

REGISTERED PROFESSIONAL ENGINEER
CHRISTOPHER B. GREEN
PE-5174
DATE 5/9/2022
NORTH DAKOTA

BIM 360://5444 - USFW LONG LAKE VISITOR CENTER/21BL5444-ELECTRICAL_R20.rvt

LONG LAKE NWR					SUB-SHEET
ELECTRICAL LIGHTING PLAN					E102
NEW HEADQUARTERS AND VISITOR CENTER					
DESIGNED CG	DRAWN CG	CHECKED PK	DATE 2022.05.09	DRAWING NO.	SHEET 57 OF 66

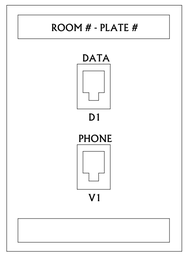

NOTES:

1. = (1) DATA (1) PHONE JACK.
2. SEE SPEC. SECTION 271021 FOR PLATE AND JACK REQUIREMENTS.
3. DATA JACKS TO BE BLUE COLOR, PHONE JACKS TO BE WHITE.
4. PLATES ARE LABELED AS SHOWN, COLOR WHITE NUMBER PLATES CLOCKWISE FROM THE DOOR.
5. LABEL ALL DATA CABLES AT BOTH ENDS WITH "ROOM # - PLATE # - JACK #".
6. RJ45 DATA JACK TO BE PROVIDED WITH CATEGORY 6 CABLE. RJ45 TELEPHONE JACK TO BE PROVIDED WITH CATEGORY 6 CABLE.

1 E301 COMMUNICATIONS OUTLET
NOT TO SCALE

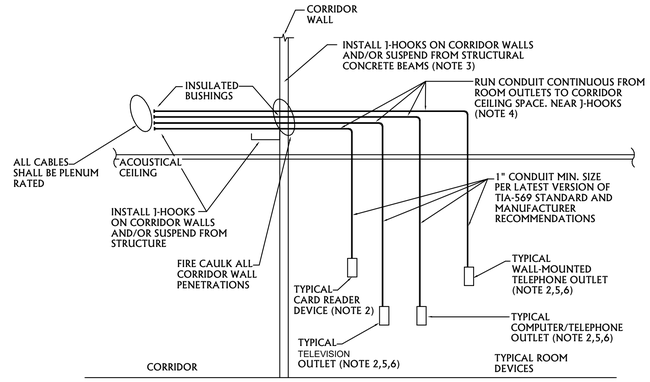

W - TELEPHONE OUTLET, WALL-MOUNTED

TV - TELEVISION OUTLET

3 - COMPUTER OUTLET. NUMBER INDICATES QUANTITY OF JACKS, NO NUMBER EQUALS 1 JACK.

3 - COMBINATION COMPUTER/TELEPHONE OUTLET, NUMBER INDICATES QUANTITY OF JACKS, NO NUMBER EQUALS 2 JACK.

NOTES:

1. INSTALL CABLING, CONDUIT, TERMINATIONS, JACKS, DEVICES, AND PLATES. INSTALL BLANK PLATES ON ALL OUTLETS NOTED AS FUTURE.
2. UTILIZE MINIMUM 2 1/8" DEEP, 4 INCH SQUARE BOXES WITH A SINGLE GANG MUD RING, SEE SECTION 260537. BOX MUST MEET LATEST VERSION OF TIA-569 STANDARD AND MANUFACTURER RECOMMENDATIONS.
3. J-HOOK SYSTEM WILL BE USED FOR DATA WIRING, TELEPHONE WIRING, AND CATV WIRING. ALL FIRE ALARM AND ACCESS CONTROL SYSTEM WIRING TO BE IN CONDUIT.
4. STUB CONDUIT FROM OUTLET CONTINUOUS TO J-HOOKS, ROUTE CONDUIT ACROSS CORRIDOR WHERE J-HOOKS ARE ON THE OPPOSITE SIDE OR IN THE CENTER. WHERE J-HOOKS IS INSTALLED IN OPEN OFFICE AREA, ROUTE CONDUIT DIRECTLY TO J-HOOKS.
5. INSTALL A SEPARATE CABLE TO EACH DATA OUTLET, EACH TELEPHONE OUTLET, AND EACH CATV OUTLET FROM THE DATA PATCH PANELS, TELEPHONE PUNCH BLOCKS, AND CATV TERMINATION BOARD IN IT RM 116.
6. CABLE/WIRE IDENTIFICATION: WIRE MARKERS SHALL BE PERMANENT SELF-ADHESIVE MACHINE TYPED-ON TAPE WITH CLEAR ADHESIVE OVER-WRAP, ON EACH WIRE AT EACH TERMINATION. WIRE MARKERS SHALL RETAIN THEIR MARKINGS AFTER CLEANING. IDENTIFYING NUMBERS AND LETTERS ON THE WIRE MARKERS SHALL CORRESPOND TO THOSE ON THE DETAILS AND WIRING DIAGRAMS. IDENTIFICATION SHALL ALSO INCLUDE ROOM NUMBER AND JACK NUMBER. REFERENCE SPECIFICATIONS FOR ADDITIONAL INFORMATION AND REQUIREMENTS.

2 E301 TYPICAL ROOM WIRING AND CONDUIT DIAGRAM
NOT TO SCALE

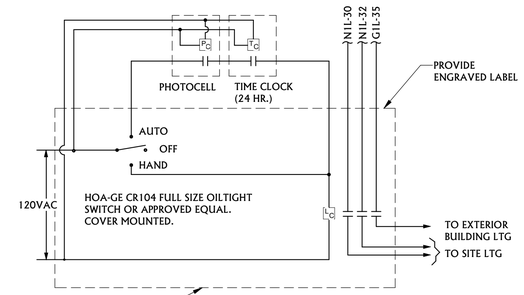

NOTES:
* PROVIDE PHOTOCELL, TIMECLOCK CONTACTORS AND ALL RELATED CONDUIT/CONDUCTORS.
* REFERENCE DETAIL 1/E102 FOR LOCATION OF PHOTOCELL.
* PROVIDE NUMBER OF CONTACTORS AS REQUIRED BY NEC FOR MULTIPLE POWER BRANCHES

3 E301 EXTERIOR LIGHTING CONTROL DIAGRAM
NOT TO SCALE

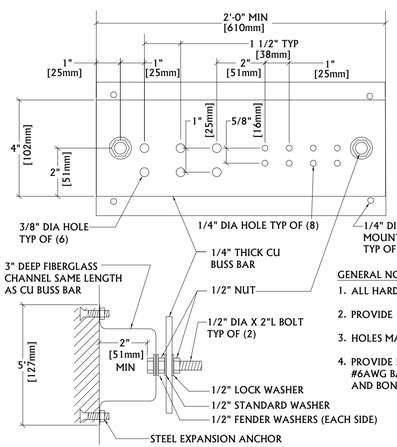

GENERAL NOTES

1. ALL HARDWARE SHOWN SHALL BE STAINLESS STEEL.
2. PROVIDE 1 MOUNTING POINT PER 12" OF BAR LENGTH.
3. HOLES MAY BE ADDED IF REQUIRED.
4. PROVIDE 5/8"D X 8'L COPPER GROUND ROD AND #6AWG BARE SOLID COPPER EQUIPMENT CONDUCTOR AND BOND TO BUSS BAR.

4 E301 TELEPHONE MAIN GROUND BAR DETAIL
NOT TO SCALE

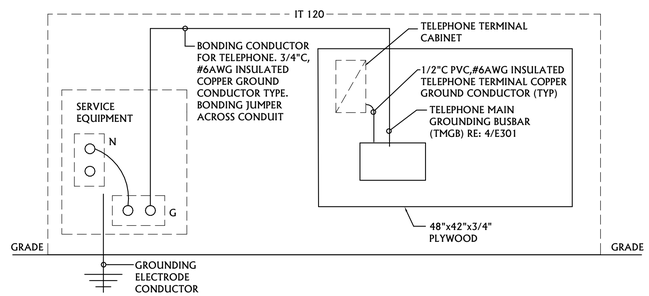

1. INSULATED #6AWG IN 3/4"C ROUTED UNDERGROUND
2. INCLUDE - NON-METALLIC LABEL "WARNING IF THIS CONNECTOR ON CABLE IS LOOSE OR MUST BE REMOVED PLEASE CALL THE BUILDING MANAGER." AT ALL GROUND BARS.
3. RUN CONDUCTOR FROM GROUND TO TELEPHONE TERMINAL CABINET.
4. ALL CONNECTORS TO GROUND BARS SHALL BE 2-HOLE COMPRESSION TYPE.
5. GROUNDING BARS:
   - ELECTROLYTIC COPPER
   - MOUNTED ON FIBERGLASS INSULATORS
   - NEMA BOLT HOLE SIZING AND SPACING
6. ALL BONDING CONDUCTORS SHALL BE CONTINUOUS AND ROUTED IN THE SHORTEST POSSIBLE STRAIGHT LINE PATH.
7. ROUTE INSULATED #6AWG FROM EACH TMGB TO NEAREST VERTICAL STRUCTURAL STEEL MEMBER AND CADWELD
8. ROUTE CONDUCTOR FROM TMGB TO EACH DATA RACK AND CONNECT TO EACH DATA RACK.
9. ALL TELECOMMUNICATIONS CLOSETS WITH MULTIPLE WIRE MANAGEMENT RACKS WILL HAVE BONDING JUMPER INSTALLED AS SHOWN.

5 E301 TELEPHONE GROUNDING DETAIL AND NOTES
NOT TO SCALE

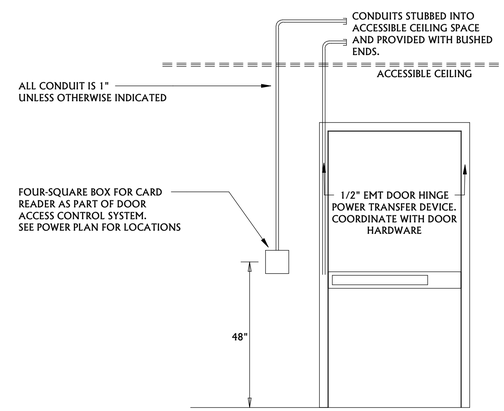

6 E301 CARD READER ROUGH-IN DETAIL
NOT TO SCALE

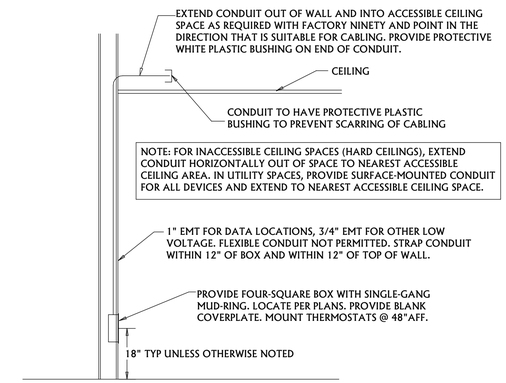

NOTE: CONDUIT SIZES SHALL BE AS DESCRIBED IN THE DETAIL UNLESS NOTED OTHERWISE ON THE DRAWINGS OR SPECIFICATIONS

7 E301 LOW VOLTAGE RACEWAY DETAIL
NOT TO SCALE

ACE INC
ASSOCIATED • CONSTRUCTION • ENGINEERING
2040 HARNISH BLVD.
BILLINGS, MT 59102
406-245-0136
ACE JOB 21BL5444

REGISTERED PROFESSIONAL ENGINEER
CHRISTOPHER B. GREEN
PE-5174
DATE 5/9/2022
NORTH DAKOTA

LONG LAKE NWR

ELECTRICAL DETAILS

NEW HEADQUARTERS AND VISITOR CENTER

DESIGNED	DRAWN	CHECKED	DATE	DRAWING NO.	SUB-SHEET
CG	CG	PK	2022.05.09		E301

SHEET 58 OF 66

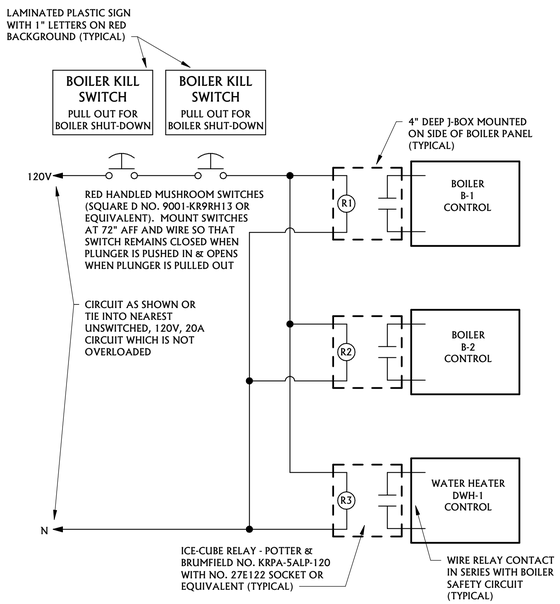

1 E302 BOILER EMERGENCY SHUTDOWN
NOT TO SCALE

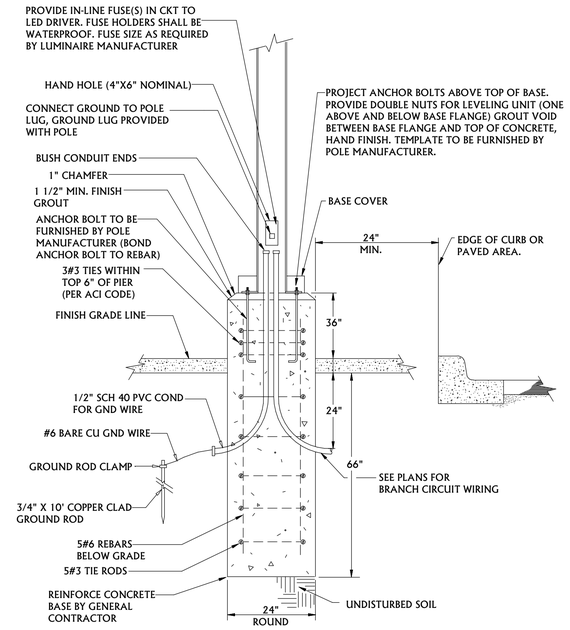

2 E302 POLE BASE DETAIL - RESTRAINED LOCATION
NOT TO SCALE

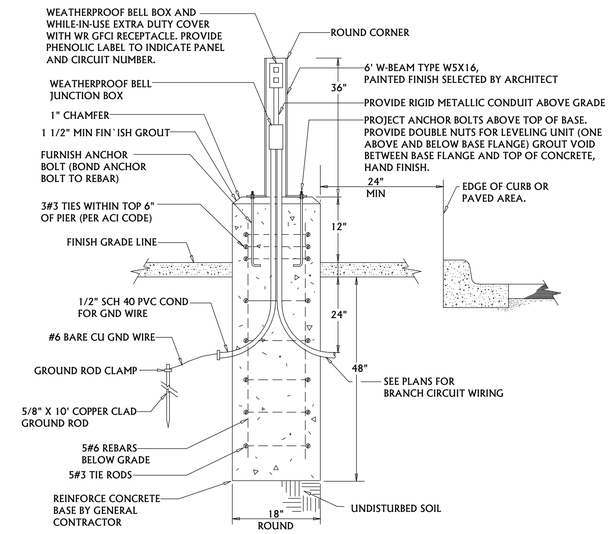

3 E302 ENGINE BLOCK HEATER RECEPTACLE
NOT TO SCALE

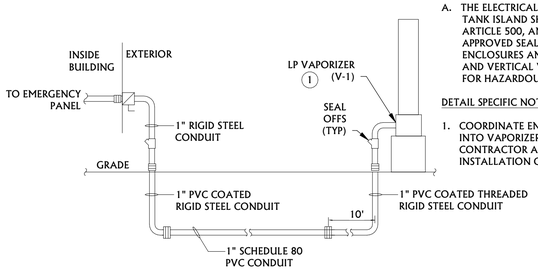

DETAIL GENERAL NOTES:

A. THE ELECTRICAL INSTALLATION TO THE LP TANK ISLAND SHALL COMPLY WITH NEC ARTICLE 500, AND 501. PROVIDE APPROVED SEALING FITTINGS AT ALL ENCLOSURES AND AT ALL HORIZONTAL AND VERTICAL VOUNDARIES AS DEFINED FOR HAZARDOUS AREAS.

DETAIL SPECIFIC NOTES: #

1. COORDINATE ENTRANCE OF CONDUITS INTO VAPORIZER WITH GENERAL CONTRACTOR AND FUELING SYSTEM INSTALLATION CONTRACTOR.

4 E302 POWER CONDUITS TO LP TANK ISLAND
NOT TO SCALE

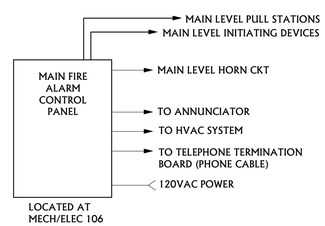

NOTES:
- ALL FIRE ALARM WIRING SHALL BE INSTALLED IN METAL CONDUIT UNLESS AN EXCEPTION IS GRANTED BY AHU.
- COORDINATE WIRE COUNTS WITH FA SYSTEM SUPPLIER.
- SEE FLOOR PLANS AND TYPICAL UNIT WIRING PLANS FOR QUANTITIES OF SIGNALING & INTIATING DEVICES.
- PROVIDE NECESSARY INTERLOCKING TO HVAC SYSTEMS.
- PROVIDE POWER TO DOOR HOLD OPENERS AS NEEDED.

5 E302 FIRE ALARM RISER
NOT TO SCALE

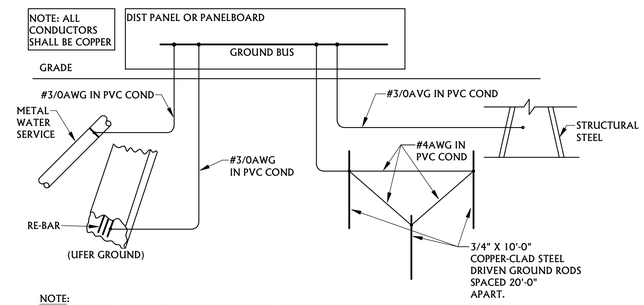

NOTE:
CONCRETE-ENCASED ELECTRODE(UFER GROUND): PROVIDE CONNECTION TO CONCRETE-ENCASED ELECTRODE CONSISTING OF NOT LESS THAN 20 FEET (6 METERS) OF EITHER STEEL REINFORCING BARS OR BARE COPPER CONDUCTOR NOT SMALLER THAN #4AWG EMBEDDED WITHIN CONCRETE FOUNDATION OR FOOTING THAT IS IN DIRECT CONTACT WITH EARTH IN ACCORDANCE WITH NFPA 70. FIELD COORDINATE THE WORK WITH OTHER TRADES TO PROVIDE STEEL REINFORCEMENT COMPLYING WITH SPECIFIED REQUIREMENTS FOR CONCRETE-ENCASED ELECTRODE.

6 E302 GROUNDING ELECTRODE DIAGRAM
NOT TO SCALE

ACE INC
ASSOCIATED • CONSTRUCTION • ENGINEERING
2040 HARNISH BLVD.
BILLINGS, MT 59102
406-245-0136
ACE JOB 21BL5444

REGISTERED PROFESSIONAL ENGINEER
CHRISTOPHER B. GREEN
PE-5174
DATE 5/9/2022
NORTH DAKOTA

LONG LAKE NWR

ELECTRICAL DETAILS

NEW HEADQUARTERS AND VISITOR CENTER

SUB-SHEET E302

DESIGNED	DRAWN	CHECKED	DATE	DRAWING NO.	SHEET
CG	CG	PK	2022.05.09		59 OF 66

ELECTRICAL SITE PLAN SYMBOLS

THIS IS A COMPREHENSIVE SYMBOL SCHEDULE. NOT ALL SYMBOLS ARE APPLICABLE TO THESE DRAWINGS.

—PE—	PRIMARY POWER	—L—	LIGHTING
—SE—	SECONDARY POWER	—T—	TELECOMMUNICATIONS
—OHP—	OVERHEAD POWER	—C—	COMMUNICATIONS
Ø	UTILITY POWER POLE	—TV—	TELEVISION
▭	UTILITY SECTIONALIZING CABINET	—FO—	FIBER OPTIC
—EUG—	UNDERGROUND ELECTRICAL POWER	—UG—	UNDERGROUND EMPTY CONDUIT

ELECTRICAL SITE PLAN NOTES

A	ALL COSTS FROM UTILITY COMPANIES (ELECTRIC, TELECOM) SHALL BE INCLUDED IN THE CONTRACTOR'S BID. COMPLY WITH ALL APPLICABLE UTILITY COMPANY STANDARDS FOR WORK PROVIDED OR INTERFACING WITH THE UTILITY COMPANIES DURING THIS PROJECT.
B	AN EFFORT HAS BEEN MADE TO DOCUMENT EXISTING DIVISION 26/27 UNDERGROUND UTILITIES. THESE UNDERGROUND UTILITIES ARE INDICATED IN A GENERAL LOCATION AND ARE NOT TO BE ASSUMED ACCURATE. CONTRACTOR SHALL BE RESPONSIBLE FOR LOCATION AND VERIFYING EXACT LOCATIONS AND TYPES OF ALL UNDERGROUND UTILITIES. CONTRACTOR SHALL REROUTE, EXTEND, AND/OR REPLACE UTILITIES AWAY FROM BUILDING SITE AND ASSOCIATED PROJECT SITE ALTERNATION REQUIREMENTS. UTILITY EXTENSION, REPLACEMENT, ETC SHALL COMPLY WITH MATERIAL AND INSTALLATION REQUIREMENTS AS INDICATED IN CONTRACT DOCUMENTS.
C	COORDINATE TRENCHING FOR UTILITIES WITH CIVIL DRAWINGS AND GENERAL CONTRACTOR. REFERENCE CIVIL DRAWINGS FOR CONSTRUCTION PHASING DIAGRAMS.
D	FOR ALL LIGHTING CONDUITS SHOWN, PROVIDE A 1" SCH 40 PVC CONDUIT (WITH 1/2" MULE TAPE) IN TRENCH AT 18" BURIAL DEPTH) WITH THE EXCEPTION CONDUIT CROSSING UNDER ROADWAYS/DRIVEWAYS SHALL BE 24" BURIAL DEPTH AND A 1" SCH 80 PVC CONDUIT.
E	CONNECT ALL SITE LIGHTING CIRCUITS (POLE-MOUNTED AND IN-GRADE FLAGPOLE LIGHTING) TO PANELBOARD N1L THRU LIGHTING CONTACTOR. REFERENCE DETAIL 3/E301.
F	PROVIDE TWO 4" SCHEDULE 40 PVC EMPTY CONDUITS (EACH WITH 1/2" MULE TAPE) AT 24" BELOW GRADE FOR THE ENTIRE LENGTH OF THE FIBER OPTIC LINE. FIELD COORDINATE EXACT REQUIREMENTS AND WORK WITH BEK COMMUNICATIONS.

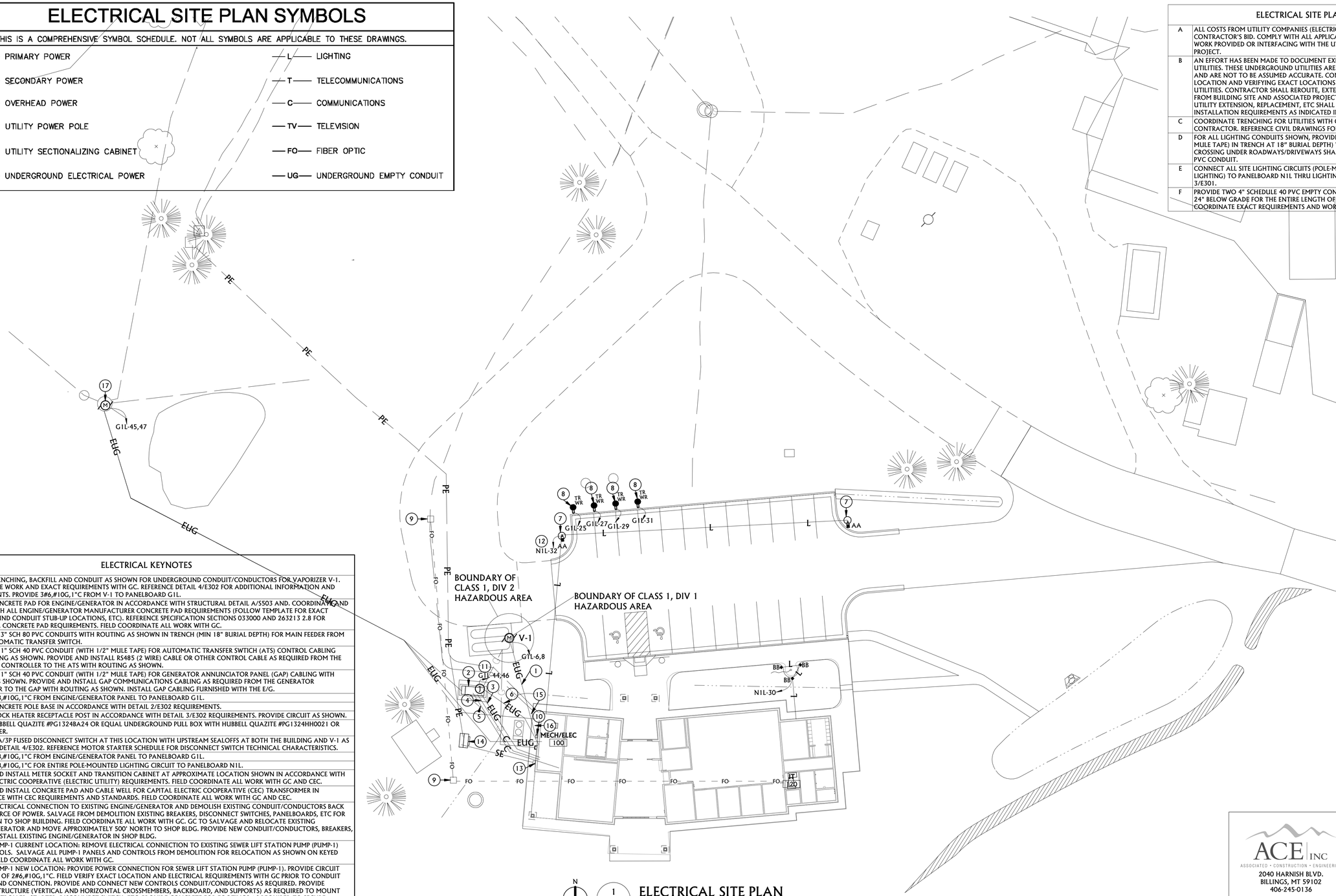

ELECTRICAL KEYNOTES

1	PROVIDE TRENCHING, BACKFILL AND CONDUIT AS SHOWN FOR UNDERGROUND CONDUIT/CONDUCTORS FOR VAPORIZER V-1. COORDINATE WORK AND EXACT REQUIREMENTS WITH GC. REFERENCE DETAIL 4/E302 FOR ADDITIONAL INFORMATION AND REQUIREMENTS. PROVIDE 3#6,#10G,1"C FROM V-1 TO PANELBOARD G1L.
2	PROVIDE CONCRETE PAD FOR ENGINE/GENERATOR IN ACCORDANCE WITH STRUCTURAL DETAIL A/S503 AND. COORDINATE AND COMPLY WITH ALL ENGINE/GENERATOR MANUFACTURER CONCRETE PAD REQUIREMENTS (FOLLOW TEMPLATE FOR EXACT UNDERGROUND CONDUIT STUB-UP LOCATIONS, ETC). REFERENCE SPECIFICATION SECTIONS 033000 AND 263213 2.8 FOR ADDITIONAL CONCRETE PAD REQUIREMENTS. FIELD COORDINATE ALL WORK WITH GC.
3	PROVIDE (2) 3" SCH 80 PVC CONDUITS WITH ROUTING AS SHOWN IN TRENCH (MIN 18" BURIAL DEPTH) FOR MAIN FEEDER FROM E/G TO AUTOMATIC TRANSFER SWITCH.
4	PROVIDE (1) 1" SCH 40 PVC CONDUIT (WITH 1/2" MULE TAPE) FOR AUTOMATIC TRANSFER SWTICH (ATS) CONTROL CABLING WITH ROUTING AS SHOWN. PROVIDE AND INSTALL RS485 (2 WIRE) CABLE OR OTHER CONTROL CABLE AS REQUIRED FROM THE GENERATOR CONTROLLER TO THE ATS WITH ROUTING AS SHOWN.
5	PROVIDE (1) 1" SCH 40 PVC CONDUIT (WITH 1/2" MULE TAPE) FOR GENERATOR ANNUNCIATOR PANEL (GAP) CABLING WITH ROUTING AS SHOWN. PROVIDE AND INSTALL GAP COMMUNICATIONS CABLING AS REQUIRED FROM THE GENERATOR CONTROLLER TO THE GAP WITH ROUTING AS SHOWN. INSTALL GAP CABLING FURNISHED WITH THE E/G.
6	PROVIDE 3#8,#10G,1"C FROM ENGINE/GENERATOR PANEL TO PANELBOARD G1L.
7	PROVIDE CONCRETE POLE BASE IN ACCORDANCE WITH DETAIL 2/E302 REQUIREMENTS.
8	PROVIDE BLOCK HEATER RECEPTACLE POST IN ACCORDANCE WITH DETAIL 3/E302 REQUIREMENTS. PROVIDE CIRCUIT AS SHOWN.
9	PROVIDE HUBBELL QUAZITE #PG1324BA24 OR EQUAL UNDERGROUND PULL BOX WITH HUBBELL QUAZITE #PG1324HH0021 OR EQUAL COVER.
10	PROVIDE 60A/3P FUSED DISCONNECT SWITCH AT THIS LOCATION WITH UPSTREAM SEALOFFS AT BOTH THE BUILDING AND V-1 AS SHOWN ON DETAIL 4/E302. REFERENCE MOTOR STARTER SCHEDULE FOR DISCONNECT SWITCH TECHNICAL CHARACTERISTICS.
11	PROVIDE 3#8,#10G,1"C FROM ENGINE/GENERATOR PANEL TO PANELBOARD G1L.
12	PROVIDE 2#8,#10G,1"C FOR ENTIRE POLE-MOUNTED LIGHTING CIRCUIT TO PANELBOARD N1L.
13	PROVIDE AND INSTALL METER SOCKET AND TRANSITION CABINET AT APPROXIMATE LOCATION SHOWN IN ACCORDANCE WITH CAPITAL ELECTRIC COOPERATIVE (ELECTRIC UTILITY) REQUIREMENTS. FIELD COORDINATE ALL WORK WITH GC AND CEC.
14	PROVIDE AND INSTALL CONCRETE PAD AND CABLE WELL FOR CAPITAL ELECTRIC COOPERATIVE (CEC) TRANSFORMER IN ACCORDANCE WITH CEC REQUIREMENTS AND STANDARDS. FIELD COORDINATE ALL WORK WITH GC AND CEC.
15	REMOVE ELECTRICAL CONNECTION TO EXISTING ENGINE/GENERATOR AND DEMOLISH EXISTING CONDUIT/CONDUCTORS BACK TO THE SOURCE OF POWER. SALVAGE FROM DEMOLITION EXISTING BREAKERS, DISCONNECT SWITCHES, PANELBOARDS, ETC FOR RELOCATION TO SHOP BUILDING. FIELD COORDINATE ALL WORK WITH GC. GC TO SALVAGE AND RELOCATE EXISTING ENGINE/GENERATOR AND MOVE APPROXIMATELY 500' NORTH TO SHOP BLDG. PROVIDE NEW CONDUIT/CONDUCTORS, BREAKERS, ETC TO REINSTALL EXISTING ENGINE/GENERATOR IN SHOP BLDG.
16	EXISTING PUMP-1 CURRENT LOCATION: REMOVE ELECTRICAL CONNECTION TO EXISTING SEWER LIFT STATION PUMP (PUMP-1) AND CONTROLS. SALVAGE ALL PUMP-1 PANELS AND CONTROLS FROM DEMOLITION FOR RELOCATION AS SHOWN ON KEYED NOTE 17. FIELD COORDINATE ALL WORK WITH GC.
17	EXISTING PUMP-1 NEW LOCATION: PROVIDE POWER CONNECTION FOR SEWER LIFT STATION PUMP (PUMP-1). PROVIDE CIRCUIT CONSISTING OF 2#6,#10G,1"C. FIELD VERIFY EXACT LOCATION AND ELECTRICAL REQUIREMENTS WITH GC PRIOR TO CONDUIT ROUTING AND CONNECTION. PROVIDE AND CONNECT NEW CONTROLS CONDUIT/CONDUCTORS AS REQUIRED. PROVIDE UNISTRUT STRUCTURE (VERTICAL AND HORIZONTAL CROSSMEMBERS, BACKBOARD, AND SUPPORTS) AS REQUIRED TO MOUNT PUMP-1 CONTROLLER, STARTER, DISCONNECT SWITCH, ETC. PROVIDE CONCRETE FOR FOOTINGS AS REQUIRED TO SECURE UNISTRUT STRUCTURE TO THE EARTH AND PROVIDE GROUND ROD AND CONNECT UNISTRUT STRUCTURE PER NEC REQUIREMENTS.

N

1 / ES101 — ELECTRICAL SITE PLAN

1" = 20'-0"

ACE INC
ASSOCIATED • CONSTRUCTION • ENGINEERING
2040 HARNISH BLVD.
BILLINGS, MT 59102
406-245-0136
ACE JOB 21BL5444

REGISTERED PROFESSIONAL ENGINEER
CHRISTOPHER B. GREEN
PE-5174
DATE 5/9/2022
NORTH DAKOTA

LONG LAKE NWR

ELECTRICAL SITE PLAN

NEW HEADQUARTERS AND VISITOR CENTER

DESIGNED	DRAWN	CHECKED	DATE	DRAWING NO.	SUB-SHEET
CG	CG	PK	2022.05.09		ES101

SHEET 60 OF 66

BIM 360://5444 - USFW LONG LAKE VISITOR CENTER/21BL5444-ELECTRICAL_R20.rvt

PLUMBING FIXTURE SCHEDULE

PLAN CODE	ITEM	MANUF.	MODEL NUMBER	MATERIAL & FINISH	TRIM	ROUGH-IN SIZE					ADA	REMARKS
						CW	HW	SAN	VENT	A.S.S.E. 1070 TMV		
EWC-1	ELECTRIC WATER COOLER	ELKAY	EZS8WSLK	STAINLESS STEEL	BOTTLE FILLER EZWSR	1/2"	--	2"	2"	--	X	WATER COOLER WTIH BOTTLE FILLING STATION. MOUNT TO CONFORM TO ALL A.N.S.I. & A.D.A. REQUIREMENTS.
FD-1	FLOOR DRAIN	SIOUX CHEIF	832-25D-NR-V	DURA COATED CAST IRON BODY	POLISHED NICKEL BRONZE TOP	--	--	2"	2"	--	--	PROVIDE WITH SHIM KIT #832-S3, PROVIDE WITH TRAP PRIMER CONNECTION. SEE 1/P301 FOR DETAIL.
FS-1	FLOOR SINK	J.R. SMITH	3140Y-13	A.R.E. CAST IRON INTERIOR W. ALUMINUM DOME STRAINER.	NICKEL BRONZE RIM, 3/4 GRATE	--	--	3"	2"	--	--	PROVIDE WITH TRAP PRIMER CONNECTION, 3/4 GRATE. SEE 2/P301 FOR DETAIL.
HB-1	HOSE BIBB	WOODFORD	67	CHROME	"T" HANDLE KEY	3/4"	--	--	--	--	--	FREEZELESS, BACKFLOW PROTECTED HOSE BIBB.
LAV-1	WALL MOUNTED LAVATORY	AMERICAN STANDARD	LUCERNE #0356.421	VITREOUS CHINA	GRID STRAINER. KOHLER K-7515-VS. IR FAUCET	1/2"	1/2"	2"	2"	X	X	PROVIDE ASSE 1070 COMPLIANT THERMOSTATIC MIXING VALVE, INSULATE HW, CW, SAN, & STOPS. INSTALL TO CONFORM TO ALL A.N.S.I. & A.D.A. REQUIRMENTS. PROVIDE FAUCET WITH 0.5 GPM AERATOR & COMMERCIAL CHAIR TYPE CARRIERS. TOUCHLESS FAUCET. 120V POWER BY E.C.
MS-1	MOP SINK	FIAT	MSB 2424	MOLDED-STONE	MOEN COMMERCIAL #8124	3/4"	3/4"	3"	2"	--	--	SERVICE SINK FAUCET SHALL HAVE VACUUM BREAKER, CHECKS, SERVICE STOPS, PAIL HOOK, TOP WALL BRACE & LEVER HANDLES, PROVIDE WITH FIAT HOSE & BRACKET #832-AA, MOP HANGER #830AA & WALL GUARDS MSG2424
S-1	DOUBLE COMPARTMENT SINK	ELKAY	LRAD332265PD	18GA STAINLESS STEEL, 6.5" DEPTH.	KOHLER K-23766-VS. PULL DOWN SIGNLE HANDLE KITCHEN FAUCET. LKPD1 STRAINER.	1/2"	1/2"	2"	2"	X	X	PROVIDE SINK WITH 1 HOLE CONFIGURATION, CENTER DRAIN IN BOTH BOWLS, ASSE 1070 COMPLIANT THERMOSTATIC MIXING VALVE, INSULATE HW, CW, & STOPS AS REQ'D. INSTALL TO CONFORM TO ALL A.N.S.I. & A.D.A. REQUIRMENTS. PROVIDE FAUCET WITH 1.5 GPM AERATOR, TOUCHLESS FAUCET. 120V POWER BY E.C. PROVIDE CENTER BACK DRAIN FOR ADA INSTALLATION.
WB-1	ICEMAKER BOX	GUY GRAY	AB9702	PLASTIC	--	1/2"	--	--	--	--	--	--
WC-1	WATER CLOSET, FT, H.C.	AMERICAN STANDARD	CADET #215AA709	VITREOUS CHINA	--	1/2"	--	4"	2"	--	--	12" ROUGH-IN. PROVIDE W/ BEMIS 1655SSCT HEAVY DUTY OPEN FRONT SEAT LESS COVER. WATER CLOSET UTILIZES TOUCHLESS FLUSH.

NOTES:
1. PROVIDE ALL FIXTURES WITH APPROPRIATE COMMERCIAL CARRIERS, CAST P-TRAPS, GRID STRAINERS, QUARTER TURN BALL STOPS AND MIXING VALVES FOR A COMPLETE INSTALLATION. REFER TO ARCHITECTURAL DRAWINGS FOR MOUNTING HEIGHTS.
2. VERIFY FLOOR FINISH THICKNESS BEFORE SETTING ANY FIXTURE.
3. ALL LAVATORIES AND SINKS TO BE PROVIDED WITH THERMOSTATIC MIXING VALVES TO TEMPER HOT WATER TO 110°F, MIXING VALVE SHALL CONFORM TO ASSE 1070.
4. PROVIDE FLUSH MOUNTED LOCKABLE ACCESS PANELS AS NEEDED FOR PLUMBING ACCESSORY ACCESS. COORDINATE LOCATION WITH ARCHITECT AND G.C. PRIOR TO ACCESSORY AND ACCESS DOOR INSTALLATION. REFER TO ARCHITECTURAL SPECIFICATIONS FOR ACCESS DOOR REQUIREMENTS.

DOMESTIC HOT WATER HEATER SCHEDULE

PLAN CODE	MANUF.	MODEL NUMBER	MBH INPUT @ SEA LEVEL	MBH OUTPUT @ SEA LEVEL	THERMAL EFF.	FLOW RATE	FUEL SOURCE	ELECTRICAL	PHYSICAL SIZE	REMARKS
DWH-1	RINNAI	RUR199iP	199	183	92%	3.8 GPM AT 100°F TEMP RISE	LPG	120V/205W	18.3" x10.1" x 31.2"	SEE NOTES

NOTES:
1. INTAKE AND VENTING SHALL BE OF THE SEALED-COMBUSTION DIRECT-VENT METHOD WITH CONCENTRIC VENT TERMINATION.. FOLLOW MANUFACTURER'S INSTALLATION GUIDELINES.
2. PROVIDE AND INSTALL A GAS SHUT-OFF VALVE AND 6" DIRT LEG ON THE GAS LINE SERVING THE WATER HEATER, SEE 5/P301.
3. REFER TO DETAIL 3/P302 FOR ADDITIONAL INSTALLATION REQUIREMENTS.
4. PROVIDE WITH CONDENSATE NEUTRALIZER. INSTALL ON CONDENSATE DRAIN LINE FOR WATER HEATER (DWH-1).
5. WATER HEATER PROVIDED WITH INTEGRATED RECIRCULATION PUMP, WALL MOUNTING KIT, AND DRAIN DOWN KIT.

POTABLE WATER EXPANSION TANK SCHEDULE

PLAN CODE	MANUF.	MODEL NUMBER	ACCEPTANCE VOLUME	TANK VOLUME	PIPE SIZE	REMARKS
PET-1	WATTS	PLT-5	1.26	2.1	3/4"	SEE NOTES.

NOTES:
1. REFER TO DETAIL 3/P302 FOR EXPANSION TANK LOCATION.
2. EXPANSION TANK AND ALL ASSOCIATED COMPONENTS SHALL BE CERTIFIED FOR POTABLE WATER USE.

ELECTRIC PROPANE VAPORIZER

PLAN CODE	MANUF.	MODEL	CAPACITY	VOLT	POWER	PH	SIZE (L X W X H)	REMARKS
V-1	ALGAS	TORREX TX50	2200 MBH	240	7.9 KW / 32.8A	1	19" x 19" x 54"	SEE 1/P302

NOTES:
1. PROVIDE WITH VALVE AND STRAINER KIT, WALL MOUNTING KIT.
2. VAPORIZER TO BE DESIGNED FOR INSTALLATION ON OR NEAR PROPANE TANK, EXPLOSION PROOF ENCLOSURE.

PROPANE FUEL LOAD SUMMARY

ITEM		INPUT DEMAND	DEMAND UNITS
TAG	DESCRIPTION		
DWH-1	DOMESTIC HOT WATER HEATER	199	MBH
B-1	BOILER	285	MBH
B-2	BOILER	285	MBH
GEN	ENGINE GENERATOR	915	MBH
TOTAL GAS LOAD		1684	MBH

NOTES:
1. PROPANE DELIVERY PRESSURE 11" W.C. IN BUILDING.
2. DISTANCE TO MOST REMOTE FIXTURE APPROX. 15' FROM REGULATOR TO B-1
3. (2) 1000 GAL PROPANE TANKS TO BE PURCHASED BY OWNER. M.C. TO MOUNT AND PIPE TANKS IN PARALLEL WITH APPROPRIATE SHUT OFF VALVES AND ACCESSORIES. SEE 1/P302 FOR DETAIL.
4. SEE CIVIL PLANS FOR MORE INFORMATION.

PLUMBING SYMBOLS LEGEND

GENERAL PIPING

or	DIRECTION OF FLOW	or	TEE IN HORIZ. RUN
or	REDUCER FITTING	or	BRANCH TEE W/ OFFSET
	ELBOW TURNED UP	or	BRANCH TEE TURNED UP
	ELBOW TURNED DN.	or	BRANCH TEE TURNED DN.
	DROP IN HORIZ. RUN		CROSS IN HORIZ. RUN
	TEE TURNED UP		90° AND 45° ELBOWS
	TEE TURNED DN.		END CAP CONNECTION
	BELL AND SPIGOT		UNION FITTING

DOMESTIC PIPING TYPES

-CW-	DOMESTIC COLD WATER	SAN	SANITARY WASTE
-HW-	DOMESTIC HOT WATER	-V-	VENT
HWRC	DOMESTIC HOT WATER RECIRC.		

MISCELLANEOUS/MECHANICAL PIPING TYPES

-CD	CONDENSATE DRAIN
LPG	LIQUID PETROLEUM GAS

PIPING FITTINGS, VALVES & SPECIALTIES

NEW PLUMBING FIXTURE

P-1 or P1	FIXT. NUMBER - SEE SCHED.		ANGLE VALVE
or	BALL VALVE		BUTTERFLY VALVE
or	GATE VALVE		PRESS. REDUCING
or	GLOBE VALVE		2-WAY (ELECTRIC)
	PLUG VALVE		2-WAY (PNEU. MTR.)
or	CHECK VALVE		2-WAY (SOLENOID)
	SOLENOID GATE VALVE		PNEUMATIC MOTOR
	BALANCING VALVE		3-WAY (ELECTRIC)
	FLOAT VALVE		3-WAY (PNEUMATIC)
	DRAIN		3-WAY (PNEU. MTR.)
or	WALL HYDRANT OR HOSE BIBB		STRAINER
or	FLEX. CONNECTION		STRAINER W/ BLOW-OFF
Ⓣ Ⓕ	SENSOR (TEMP./FLOW)	VTR	VENT THRU ROOF
	TEMP. GAUGE		PUMP
	PRESSURE GAUGE		P.O.D.C. - POINT OF DISCONNECTION
	FIRE EXTINGUISHER		P.O.C. - POINT OF CONNECTION

THIS IS A STANDARDIZED SYMBOLS LEGEND, ALL SYMBOLS SHOWN MAY NOT APPEAR ON OR WITHIN THIS SET OF CONTRACT DOCUMENTS.

PLUMBING SHEET LIST

P001	PLUMBING COVER SHEET
P101	PLUMBING DWV PLAN
P102	PLUMBING H20 AND GAS PLAN
P103	ROOF PLUMBING PLAN
P301	PLUMBING DETAILS
P302	PLUMBING DETAILS

ACE INC
ASSOCIATED • CONSTRUCTION • ENGINEERING
2040 HARNISH BLVD.
BILLINGS, MT 59102
406-245-0136
ACE JOB 21BL5444

REGISTERED PROFESSIONAL ENGINEER
TODD A. MELING
PE-8313
DATE 2022.05.09
NORTH DAKOTA

LONG LAKE NWR

PLUMBING COVER SHEET

NEW HEADQUARTERS AND VISITOR CENTER

SUB-SHEET P001

DESIGNED	DRAWN	CHECKED	DATE	DRAWING NO.	SHEET
AS	TA	AS	2022.05.09		61 OF 66

PLUMBING GENERAL DOMESTIC WASTE AND VENT NOTES

1	PLUMBING CONTRACTOR SHALL CUT ALL FLOORS, WALLS, CEILINGS, AND ROOF AS REQUIRED TO PERFORM THE WORK DEPICTED IN THESE CONTRACT DOCUMENTS AND SPECIFICATIONS. GENERAL CONTRACTOR SHALL PATCH ALL ASSOCIATED FLOORS, WALLS, CEILINGS, AND ROOF AS REQUIRED TO THE SATISFACTION OF THE ARCHITECT/ENGINEER.
2	COORDINATE PLUMBING EQUIPMENT AND PIPING WITH ALL OTHER TRADES AS REQUIRED. COORDINATE PLUMBING SYSTEMS WITH THE OWNER PROVIDED EQUIPMENT.
3	REFERENCE ARCHITECTURAL PLANS FOR EXACT FIXTURE LOCATIONS.
4	COORDINATE UNDERSLAB PIPING WITH FOOTINGS AND STEM WALLS.
5	PROVIDE ALL FLOOR DRAINS AND FLOOR SINKS WITH TRAP PRIMERS. PROVIDE WALL ACCESS PANEL FOR TRAP PRIMER ACCESS AS REQUIRED. ACCESS PANELS SHALL BE RATED WHERE REQUIRED.
6	ALL UNDERFLOOR VENT SHALL BE MINIMUM 2".
7	PROVIDE CLEANOUTS ON ALL LINES SERVING SINKS AND URINALS.
8	CONTRACTOR SHALL COORDINATE PIPE ROUTING AND EQUIPMENT PLACEMENT WITH THE SHEET METAL, HYDRONIC PIPING, FIRE PROTECTION, AND EXISTING SYSTEMS PRIOR TO INSTALLING. THE SHEET METAL DUCT WORK SHALL HAVE THE ROUTING PRIORITY. PROVIDE OFFSETS AND TRANSITIONS AS REQUIRED.
9	CONTRACTOR SHALL VERIFY ALL SANITARY INVERT ELEVATIONS PRIOR TO INITIATING ANY WORK.
10	DRAWINGS REPRESENT GENERAL ROUTING. CONTRACTOR SHALL MAKE PIPING OFFSETS AND TRANSITIONS AS NEEDED.

PLUMBING KEYNOTES

1	SEE CIVIL DRAWINGS FOR SANITARY CONTINUATION TO SEPTIC SYSTEM. SEE 4/P301 FOR CLEAN OUT TO GRADE DETAIL.
2	FLOOR CLEANOUT. SEE 4/P301 FOR CLEANOUT DETAILS.
3	ROUTE 3" SAN OVER TO FLOOR SINK. ROUTE 2" VENT UP IN WALL TO VENT SYSTEM.
4	3" VTR. SEE P103 FOR CONTINUATION.
5	ROUTE 4" SAN TO SERVE WC. ROUTE 2" V UP IN WALL AND TO VENT SYSTEM.
6	ROUTE 4" SAN TO SERVE WC. ROUTE 2" V OVER AND UP IN WALL AND TO VENT SYSTEM.
7	ROUTE 2" SAN TO FLOOR DRAIN. ROUTE 2" V OVER AND UP IN WALL TO VENT SYSTEM.
8	ROUTE 2" SAN UP TO SINK/LAV. ROUTE 2" V UP IN WALL TO VENT SYSTEM.
9	ROUTE 3" SAN TO SERVE MOP SINK. ROUTE 2" VENT OVER AND UP IN WALL TO VENT SYSTEM.
10	ROUTE 2" SAN TO SERVE ELECTRIC WATER COOLER. ROUTE 2" V UP IN WALL TO VENT SYSTEM.
11	ROUTE 3" SAN OVER TO FLOOR SINK. ROUTE 2" VENT OVER AND UP IN WALL TO VENT SYSTEM. MAINTAIN TRAP ARM LENGTH REQUIREMENTS.

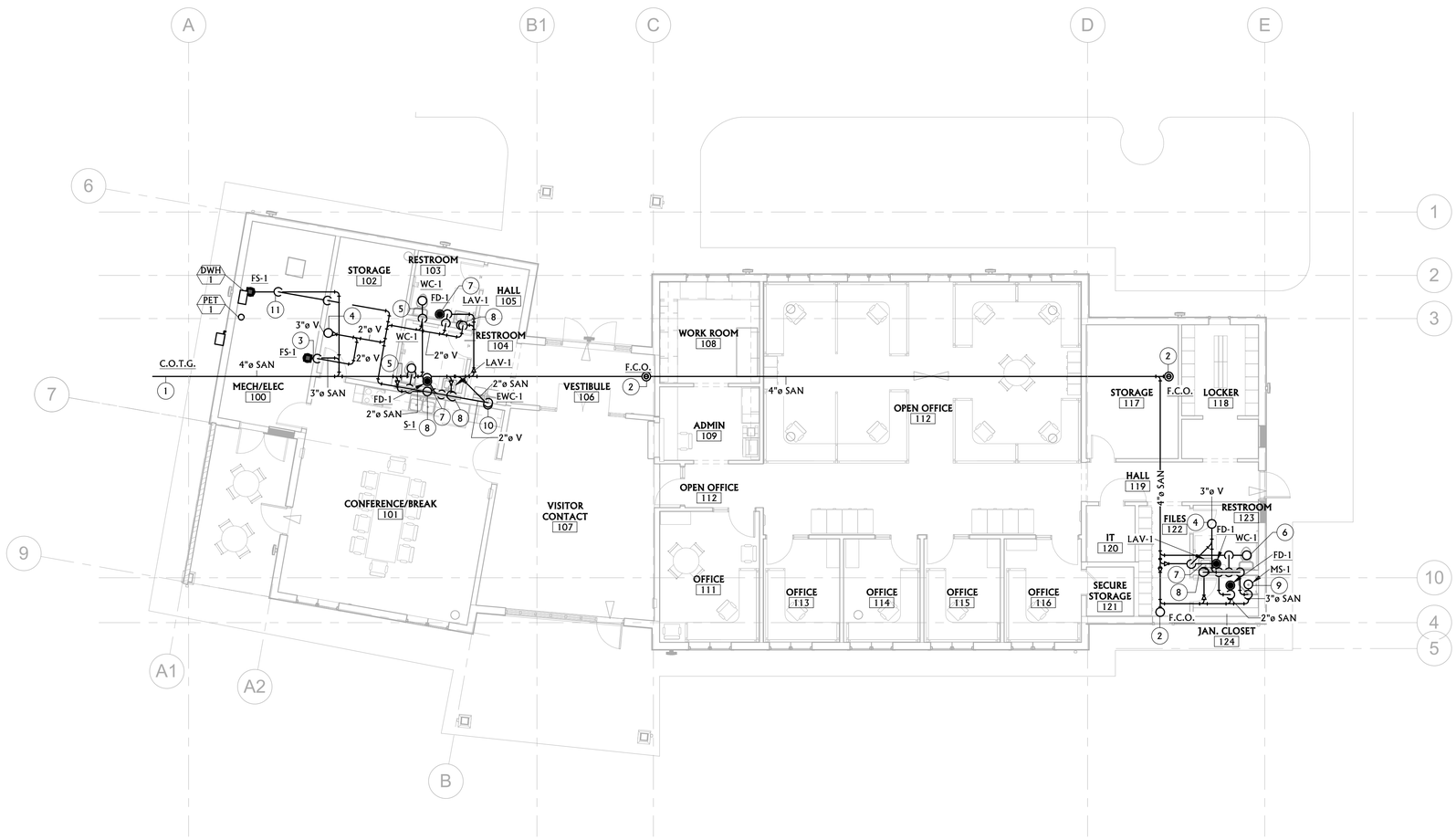

N

1 / P101 FIRST FLOOR PLUMBING DOMESTIC WASTE AND VENT PLAN

1/8" = 1'-0"

ACE INC
ASSOCIATED • CONSTRUCTION • ENGINEERING
2040 HARNISH BLVD.
BILLINGS, MT 59102
406-245-0136
ACE JOB 21BL5444

REGISTERED PROFESSIONAL ENGINEER
TODD A. MELING
PE-8312
DATE 2022.05.09
NORTH DAKOTA

LONG LAKE NWR

PLUMBING DWV PLAN

NEW HEADQUARTERS AND VISITOR CENTER

SUB-SHEET P101

DESIGNED	DRAWN	CHECKED	DATE	DRAWING NO.	SHEET
AS	TA	AS	2022.05.09		62 OF 66

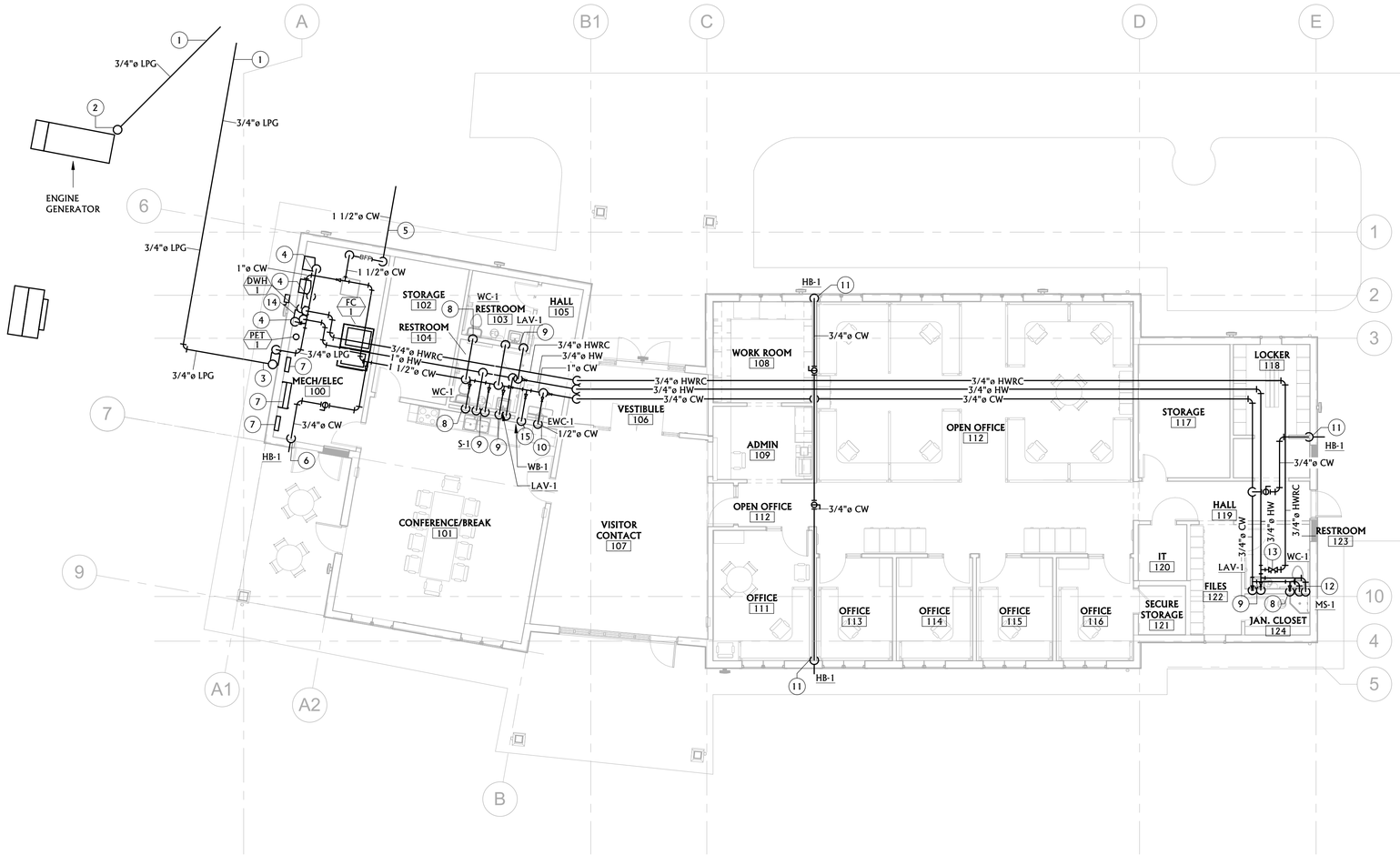

N

1 / P102 FIRST FLOOR PLUMBING DOMESTIC WATER AND GAS PLAN

1/8" = 1'-0"

PLUMBING GENERAL DOMESTIC WATER NOTES

1	PLUMBING CONTRACTOR SHALL CUT ALL FLOORS, WALLS, CEILINGS, AND ROOF AS REQUIRED TO PERFORM THE WORK DEPICTED IN THESE CONTRACT DOCUMENTS AND SPECIFICATIONS. GENERAL CONTRACTOR SHALL PATCH ALL ASSOCIATED FLOORS, WALLS, CEILINGS, AND ROOF AS REQUIRED TO THE SATISFACTION OF THE ARCHITECT/ENGINEER.
2	COORDINATE PLUMBING EQUIPMENT AND PIPING WITH ALL OTHER TRADES AS REQUIRED. COORDINATE PLUMBING SYSTEMS WITH THE OWNER PROVIDED EQUIPMENT.
3	REFERENCE ARCHITECTURAL PLANS FOR EXACT FIXTURE LOCATIONS.
4	ALL VALVES LESS THAN 2" SHALL BE BALL VALVES UNLESS OTHERWISE NOTED.
5	INSULATION ON ALL DOMESTIC COLD WATER PIPING SHALL BE PROVIDED WITH A CONTINUOUS VAPOR BARRIER. OVERSIZE HANGERS FOR INSULATION SO NO PENETRATION OF THE VAPOR BARRIER OCCURS. PROVIDE INSERTS AND SADDLES AS REQUIRED TO PREVENT INSULATION DAMAGE FROM SUPPORTS. SEE 6/P301.
6	NO DOMESTIC WATER PIPING SHALL BE ROUTED IN ANY EXTERIOR WALLS.
7	ALL UNDERFLOOR COPPER SHALL BE TYPE "K" SEAMLESS.
8	DRAWINGS REPRESENT GENERAL ROUTING. NOT ALL EXISTING CONDITIONS ARE SHOWN. CONTRACTOR SHALL MAKE PIPING OFFSETS AND TRANSITIONS AS NEEDED. CONTRACTOR SHALL FIELD VERIFY ALL EXISTING SIZES AND LOCATIONS PRIOR TO BIDDING AND CONSTRUCTING.
9	LOCATE ALL VALVES ABOVE ACCESSIBLE CEILINGS OR PROVIDE ACCESS PANEL IN CEILING FOR VALVE ACCESS. ACCESS PANELS SHALL BE RATED WHERE REQUIRED.

PLUMBING KEYNOTES

1	3/4" LPG @ 10 PSI FROM PROPANE TANKS. SEE CIVIL FOR EXACT UTILITIES LOCATIONS AND CONTINUATION.
2	ROUTE 3/4" LPG @ 10 PSI FROM PROPANE TANKS UP TO SERVE ENGINE GENERATOR. SEE 5/P301 FOR CONNECTION DETAIL. PROVIDE REGULATOR TO 11" W.C. AT GENERATOR CONNECTION.
3	ROUTE 3/4" LPG @10 PSI UP TO REGULATOR. REGULATOR TO DELIVER 11" W.C. LPG TO GAS FIRED EQUIPMENT. SEE 1/P302.
4	ROUTE 3/4" LPG @ 11" W.C. TO SERVE GAS-FIRED EQUIPMENT. SEE 5/P301 FOR CONNECTION DETAIL.
5	1-1/2" CW ENTERING BUILDING AT APPROXIMATE LOCATION. SEE CIVIL DRAWINGS FOR CONTINUATION. SEE 2/P302 FOR WATER RISER ASSEMBLY.
6	3/4" CW DOWN EXPOSED IN MECHANICAL ROOM TO HOSE BIBB. PROVIDE BALL VALVE IN ACCESSIBLE LOCATION.
7	MAINTAIN CODE REQUIRED CLEARANCE FROM ELECTRICAL PANELS.
8	ROUTE 1/2" CW DOWN TO SERVE WC.
9	ROUTE 1/2" CW/HW DOWN TO SERVE SINK/LAV.
10	ROUTE 1/2" CW DOWN TO EWC.
11	ROUTE 3/4" CW DOWN IN PERPENDICULAR WALL TO HOSE BIBB.
12	ROUTE 3/4" CW/HW DOWN IN WALL TO SERVE MOP SINK.
13	INSTALL BALANCE VALVE ON HWRC SYSTEM. BALANCE TO 2 GPM.
14	SEE 3/P302 FOR DOMESTIC WATER HEATER INSTALLATION DETAIL. PROVIDE VENTING AS SHOWN.
15	1/2" CW DOWN TO WALL BOX.

ACE INC
ASSOCIATES • CONSTRUCTION • ENGINEERING
2040 HARNISH BLVD.
BILLINGS, MT 59102
406-245-0136
ACE JOB 21BL5444

REGISTERED PROFESSIONAL ENGINEER
TODD A. MELING
PE-8313
DATE 2022.05.09
NORTH DAKOTA

LONG LAKE NWR

PLUMBING H20 AND GAS PLAN

NEW HEADQUARTERS AND VISITOR CENTER

SUB-SHEET P102

DESIGNED	DRAWN	CHECKED	DATE	DRAWING NO.	SHEET
AS	TA	AS	2022.05.09		63 OF 66

PLUMBING GENERAL DOMESTIC WASTE AND VENT NOTES

1	PLUMBING CONTRACTOR SHALL CUT ALL FLOORS, WALLS, CEILINGS, AND ROOF AS REQUIRED TO PERFORM THE WORK DEPICTED IN THESE CONTRACT DOCUMENTS AND SPECIFICATIONS. GENERAL CONTRACTOR SHALL PATCH ALL ASSOCIATED FLOORS, WALLS, CEILINGS, AND ROOF AS REQUIRED TO THE SATISFACTION OF THE ARCHITECT/ENGINEER.
2	COORDINATE PLUMBING EQUIPMENT AND PIPING WITH ALL OTHER TRADES AS REQUIRED. COORDINATE PLUMBING SYSTEMS WITH THE OWNER PROVIDED EQUIPMENT.
3	REFERENCE ARCHITECTURAL PLANS FOR EXACT FIXTURE LOCATIONS.
4	COORDINATE UNDERSLAB PIPING WITH FOOTINGS AND STEM WALLS.
5	PROVIDE ALL FLOOR DRAINS AND FLOOR SINKS WITH TRAP PRIMERS. PROVIDE WALL ACCESS PANEL FOR TRAP PRIMER ACCESS AS REQUIRED. ACCESS PANELS SHALL BE RATED WHERE REQUIRED.
6	ALL UNDERFLOOR VENT SHALL BE MINIMUM 2".
7	PROVIDE CLEANOUTS ON ALL LINES SERVING SINKS AND URINALS.
8	CONTRACTOR SHALL COORDINATE PIPE ROUTING AND EQUIPMENT PLACEMENT WITH THE SHEET METAL, HYDRONIC PIPING, FIRE PROTECTION, AND EXISTING SYSTEMS PRIOR TO INSTALLING. THE SHEET METAL DUCT WORK SHALL HAVE THE ROUTING PRIORITY. PROVIDE OFFSETS AND TRANSITIONS AS REQUIRED.
9	CONTRACTOR SHALL VERIFY ALL SANITARY INVERT ELEVATIONS PRIOR TO INITIATING ANY WORK.
10	DRAWINGS REPRESENT GENERAL ROUTING. CONTRACTOR SHALL MAKE PIPING OFFSETS AND TRANSITIONS AS NEEDED.

PLUMBING KEYNOTES

1	3" VTR. SEE 3/P301 FOR INSTALLATION DETAIL.

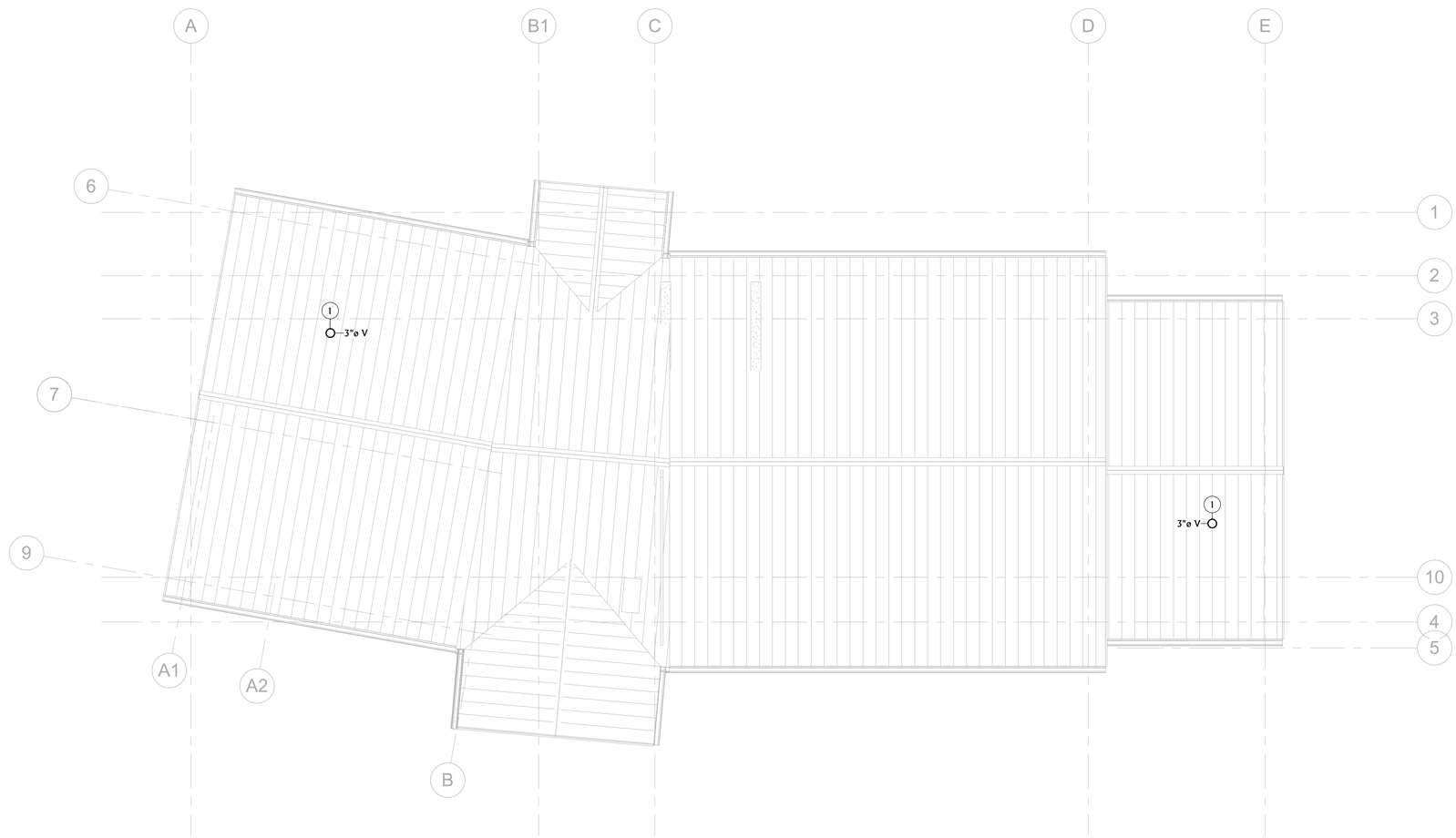

N

1 / P103 **ROOF PLUMBING PLAN**
1/8" = 1'-0"

ACE INC
ASSOCIATED • CONSTRUCTION • ENGINEERING
2040 HARNISH BLVD.
BILLINGS, MT 59102
406-245-0136
ACE JOB 21BL5444

REGISTERED PROFESSIONAL ENGINEER
TODD A. MELING
PE-8312
DATE 2022.05.09
NORTH DAKOTA

LONG LAKE NWR

ROOF PLUMBING PLAN

NEW HEADQUARTERS AND VISITOR CENTER

SUB-SHEET P103

DESIGNED	DRAWN	CHECKED	DATE	DRAWING NO.	SHEET
AS	TA	AS	2022.05.09		64 OF 66

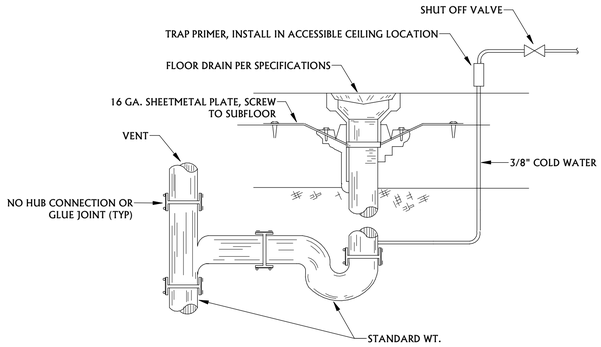

1 FLOOR DRAIN DETAIL
NOT TO SCALE

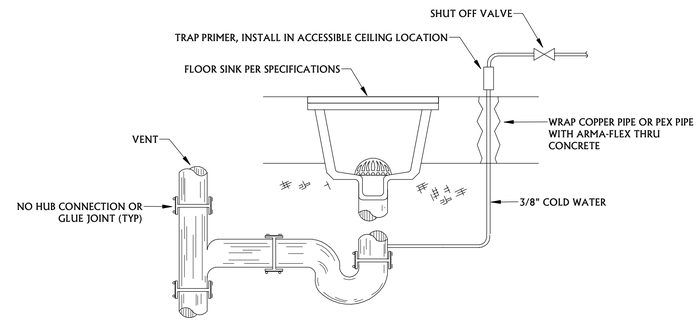

2 FLOOR SINK DETAIL
NOT TO SCALE

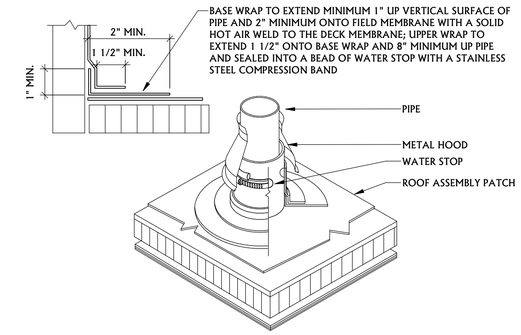

3 VENT THROUGH ROOF DETAIL
NOT TO SCALE

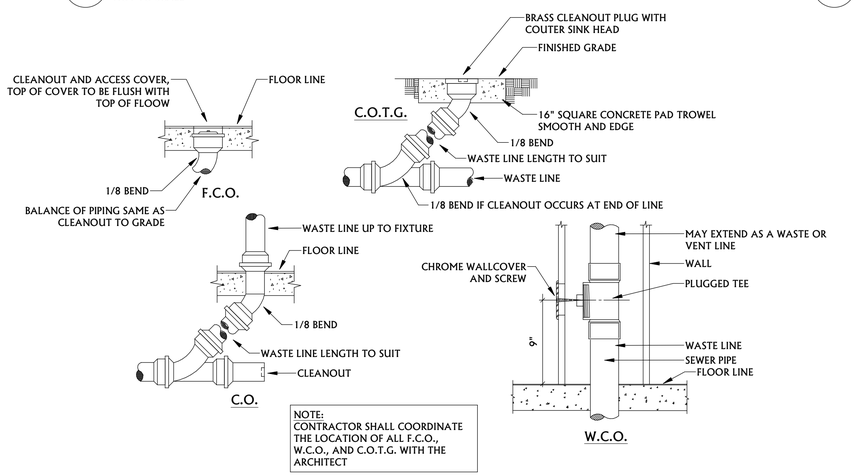

4 CLEAN OUT DETAILS
NOT TO SCALE

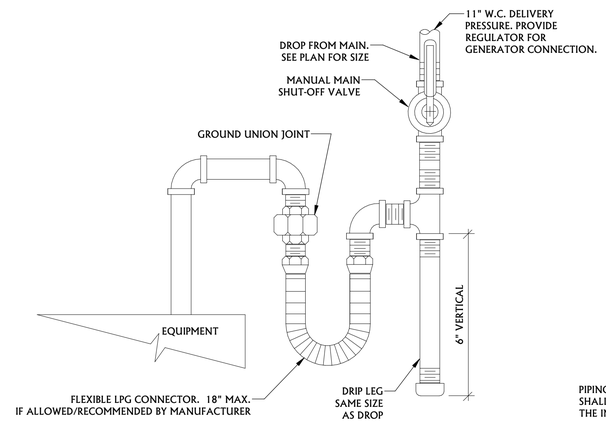

5 LPG CONNECTION DETAIL
NOT TO SCALE

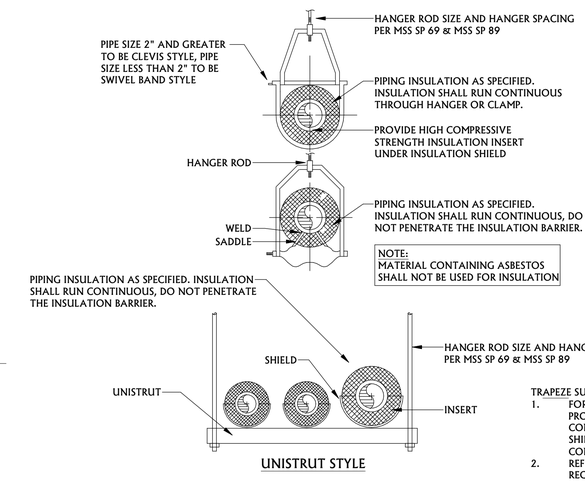

TRAPEZE SUPPORTED PIPING NOTES:
1. FOR TRAPEZE SUPPORTED PIPING; 1-1/2" AND LESS PIPING INSTALL PROTECTION SHIELD AND PIPE CLAMP, INSULATION SHALL BE CONTINUOUS. 2" AND GREATER PIPING INSTALL THERMAL-HANGER SHIELD INSERT AND PIPE CLAMP, INSULATION SHALL BE CONTINUOUS.
2. REFER TO THE PROJECT GENERAL NOTES FOR ADDITIONAL REQUIREMENTS.

6 PIPE HANGER DETAILS
NOT TO SCALE

ACE INC
ASSOCIATED • CONSTRUCTION • ENGINEERING
2040 HARNISH BLVD.
BILLINGS, MT 59102
406-245-0136
ACE JOB 21BL5444

REGISTERED PROFESSIONAL ENGINEER
TODD A. MELING
PE-8313
DATE 2022.05.09
NORTH DAKOTA

LONG LAKE NWR

PLUMBING DETAILS

NEW HEADQUARTERS AND VISITOR CENTER

SUB-SHEET P301

DESIGNED	DRAWN	CHECKED	DATE	DRAWING NO.	SHEET
AS	TA	AS	2022.05.09		65 OF 66

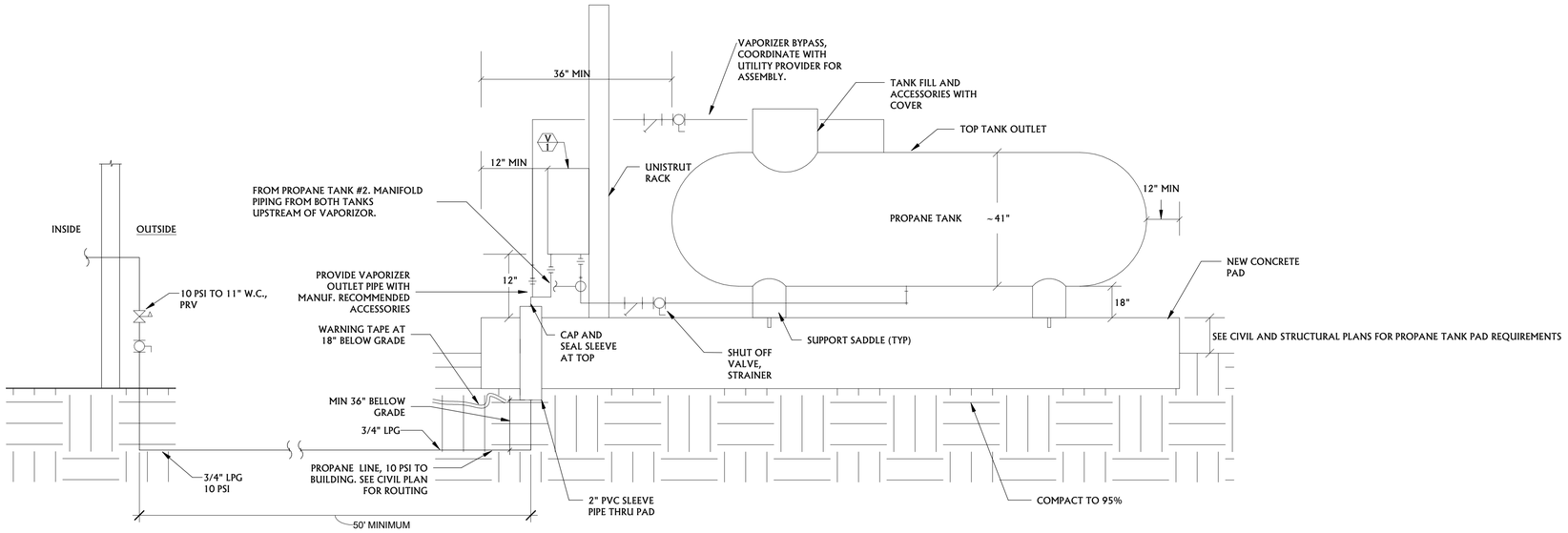

1 PROPANE TANK CONFIGURATION DETAIL
NOT TO SCALE

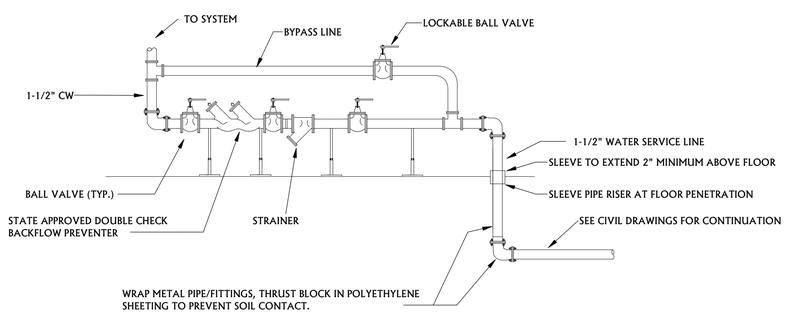

2 WATER RISER DETAIL
NOT TO SCALE

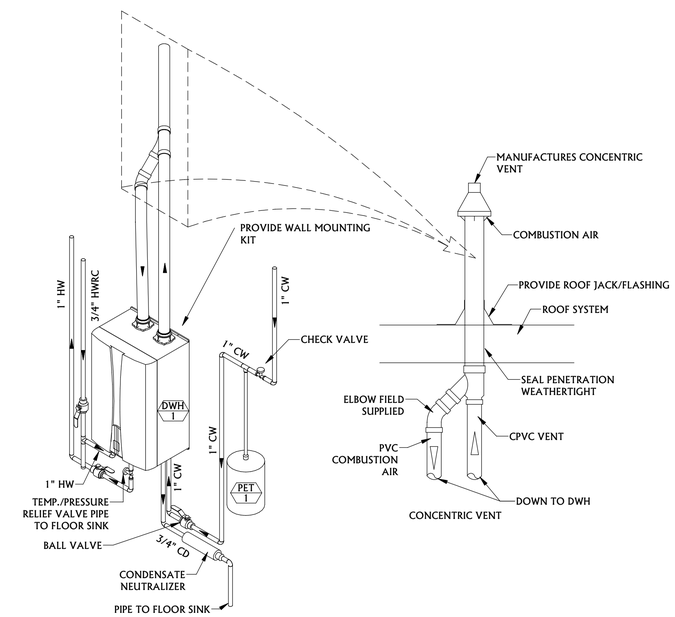

3 DOMESTIC WATER HEATING PIPING DETAILS
NOT TO SCALE

ACE INC
ASSOCIATED • CONSTRUCTION • ENGINEERING
2040 HARNISH BLVD.
BILLINGS, MT 59102
406-245-0136
ACE JOB 21BL5444

REGISTERED PROFESSIONAL ENGINEER
TODD A. MELING
PE-8313
DATE 2022.05.09
NORTH DAKOTA

LONG LAKE NWR

PLUMBING DETAILS

NEW HEADQUARTERS AND VISITOR CENTER

SUB-SHEET P302

DESIGNED	DRAWN	CHECKED	DATE	DRAWING NO.	SHEET
AS	TA	AS	2022.05.09		66 OF 66