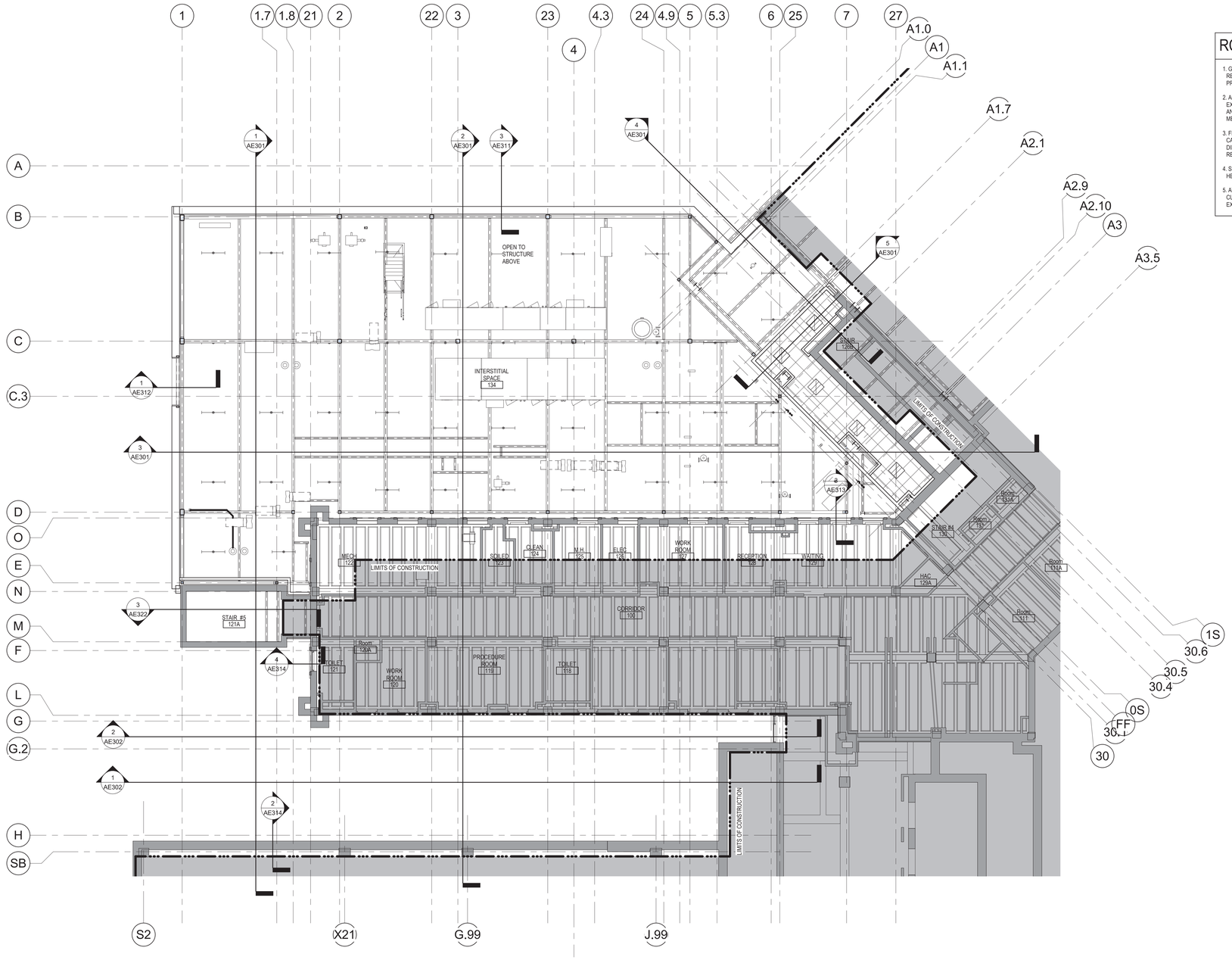

1 INTERSTITIAL/FIRST LEVEL REFLECTED CEILING PLAN

1/8" = 1'-0"

RCP GENERAL NOTES

1. GENERAL CONTRACTOR TO COORDINATE ALL CEILING MOUNTED EQUIPMENT SUPPORT REQUIREMENTS, LOCATIONS, DIMENSIONS, ETC WITH EQUIPMENT SUPPLIER AND OWNER, PRIOR TO INSTALLATION.
2. ALL CEILING MOUNTED ITEMS SUCH AS LIGHT FIXTURES, GRILLES, DIFFUSERS, SPEAKERS, EXIT LIGHTS, ETC SHALL BE LOCATED IN THE CENTER OF ACT PANELS, GYP BD SOFFITS AND/OR PLASTER SOFFIT BAYS, UNLESS NOTED OTHERWISE. COORDINATE WITH MECHANICAL AND ELECTRICAL DRAWINGS.
3. FINISHED GYP BD SOFFITS SHALL EXTEND 1" BEYOND FACE AND EXPOSED ENDS OF WALL CABINETS, FULL-HEIGHT CABINETS, ETC UNLESS NOTED OTHERWISE. COORDINATE CABINET DIMENSIONS WITH SUPPLIER. GYP BD FASCIA/SOFFIT DETAILS ARE REFERENCED FROM THE REFLECTED CEILING PLAN.
4. SEE MECHANICAL DRAWINGS FOR SPRINKLER HEAD TYPES AND LOCATIONS. CENTER ALL HEADS IN ACT UNLESS NOTED OTHERWISE.
5. AT REMODELING WORK IN EXISTING ACT SUSPENSION SYSTEM, REMOVE EXISTING PANELS, CUT AS REQUIRED FOR CONSTRUCTION AND RE-INSTALL. REPLACE ALL DAMAGED AND / OR EXTREMELY SOILED PANELS WITH ACT TO MATCH EXISTING.

REFLECTED CEILING PLAN SYMBOLS

	GYP BD CEILING / SOFFIT	OR	2'-0" x 4'-0" LIGHT FIXTURE
	ACT CEILING SYSTEM		2'-0" x 2'-0" LIGHT FIXTURE
	EXISTING ACT CEILING SYSTEM		PENDANT STRIP LIGHT FIXTURE
	IV TRACK		PENDANT STRIP LIGHT FIXTURE
	CUBICLE CURTAIN TRACK		RECESSED LIGHT FIXTURE
	ACCESS PANEL		WALL SCONCE LIGHT FIXTURE
	MECHANICAL SUPPLY GRILL		MECHANICAL LINEAR SUPPLY GRILL
	MECHANICAL RETURN GRILL	9'-0" AFF	CEILING ELEVATION

NOTE: NOT ALL SYMBOLS MAY BE USED ON EACH PLAN

REFLECTED CEILING KEYED NOTES

RC1 18" X 18" STAINLESS STEEL ACCESS PANEL. COORDINATE LOCATION WITH MECHANICAL, ELECTRICAL AND PLUMBING AND PER SEPC SECTION 08 31 13

RC2 REMOVE AND REPLACE CEILING, INCLUDING ANY MECHANICAL / ELECTRICAL CEILING MOUNTED ITEMS, IN THIS AREA AS REQUIRED FOR MECHANICAL WORK. REPLACE ANY DIRTY OR DAMAGED ACT OR CEILING GRID. SEE MEP PLANS FOR ADDITIONAL INFORMATION

RC3 STEEL CHANNEL AND STEEL POST. SEE DETAILS

NOTE: NOT ALL KEYED NOTES MAY BE USED ON EACH PLAN

Revisions:	Date:

CONSULTANT

IMEG

ARCHITECT/ENGINEER OF RECORD

ANDERSON

13605 1st Ave. N. #100 Plymouth, MN 55441
P 763.412.4000 | F 763.412.4090 | ae-mn.com
Anderson Engineering of Minnesota, LLC | Proj # 16584

STAMP

REGISTERED PROFESSIONAL ENGINEER THOMAS A. OLESAK SOUTH DAKOTA

DATE: 08/04/2022
License # 9335

Office of Construction and Facilities Management

VA U.S. Department of Veterans Affairs

Drawing Title: INTERSTITIAL/FIRST LEVEL REFLECTED CEILING PLAN

Approved:

Phase: BID DOCUMENTS

FULLY SPRINKLERED

Project Title: CONSTRUCT NEW SPS

Location: Sioux Falls, SD.

Issue Date: 08/04/2022

Checked: Checker

Drawn: Author

Project Number: 438-460

Building Number: 5

Drawing Number: AC111

VA FORM 08 - 6231

7/7/2023 1:25:49 PM

C:\Users\Public\Documents\Revit Projects\16584-R21_gbarbari@ae-mn.com.rvt

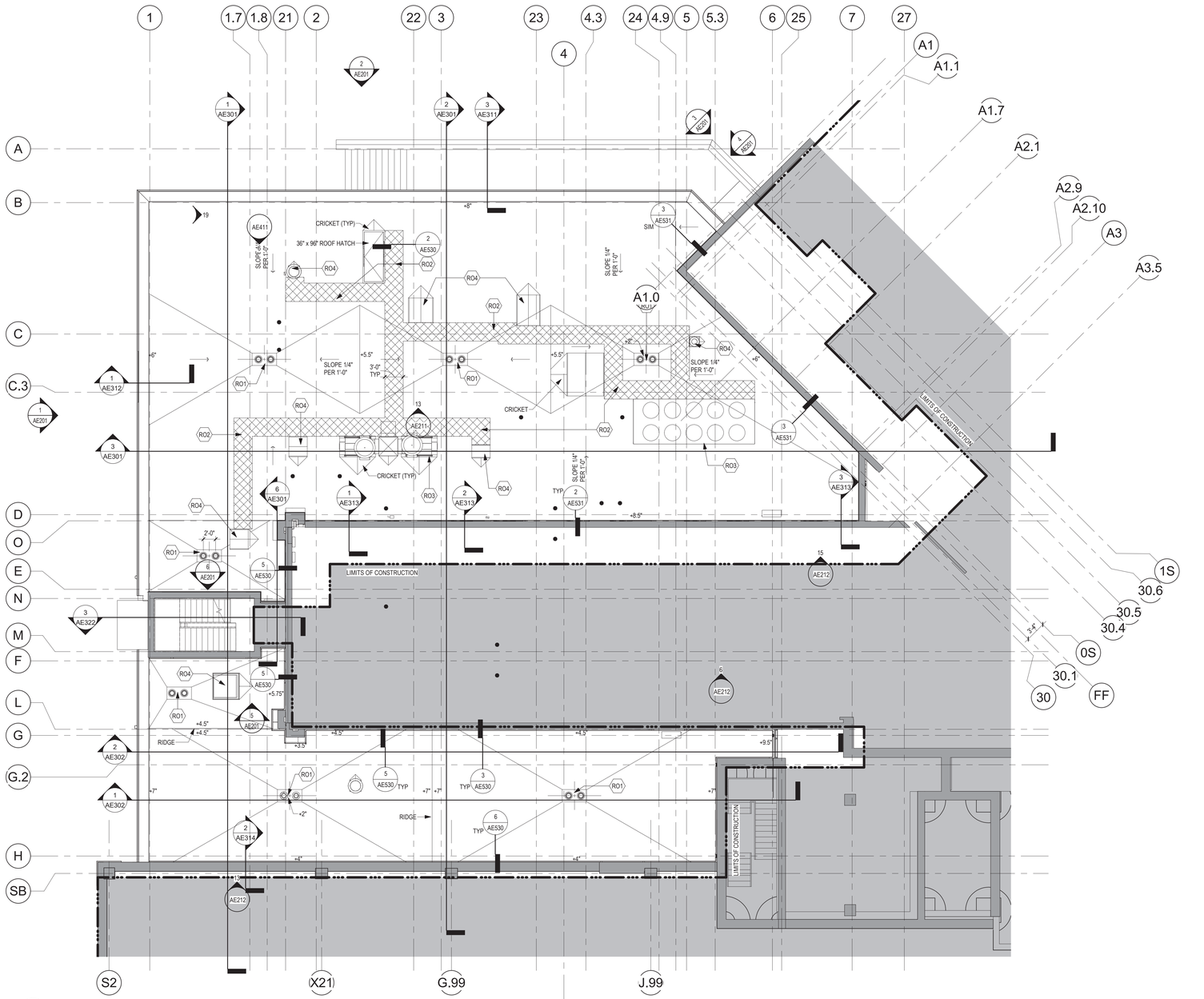

1 ROOF PLAN
1/8" = 1'-0"

ROOF KEYED NOTES

- RO1 PRIMARY AND OVERFLOW ROOF DRAIN. SEE MEP AND DETAIL 1 / AE530
- RO2 WALKWAY PADS. COORDINATE EXTENTS AND LOCATIONS WITH MECHANICAL DRAWINGS AND COR. SEE SPECIFICATIONS FOR ADDITIONAL INFORMATION
- RO3 SEE MECHANICAL FOR ROOF CURB
- RO4 SEE MECHANICAL FOR ROOF CURB AND ROOD TOP VENT

NOTE: NOT ALL KEYED NOTES MAY BE USED ON EACH PLAN

Revisions:	Date:

CONSULTANT

IMEG

ARCHITECT/ENGINEER OF RECORD

ANDERSON

13605 1st Ave. N. #100 Plymouth, MN 55441
P 763.412.4000 | F 763.412.4090 | ae-mn.com
Anderson Engineering of Minnesota, LLC | Proj # 16584

STAMP

REGISTERED PROFESSIONAL ARCHITECT
THOMAS A. OLESAK
SOUTH DAKOTA
DATE: 08/04/2022
License # 9335

Office of Construction and Facilities Management

VA U.S. Department of Veterans Affairs

Drawing Title: ROOF PLAN

Approved:

Phase: BID DOCUMENTS

FULLY SPRINKLERED

Project Title: CONSTRUCT NEW SPS

Location: Sioux Falls, SD.

Issue Date: 08/04/2022 | Checked: Checker | Drawn: Author

Project Number: 438-460

Building Number: 5

Drawing Number: AE121

VA FORM 08 - 6231

7/7/2023 1:26:39 PM

C:\Users\Public\Documents\Revit Projects\16584-R21_gbarbari@ae-mn.com.rvt

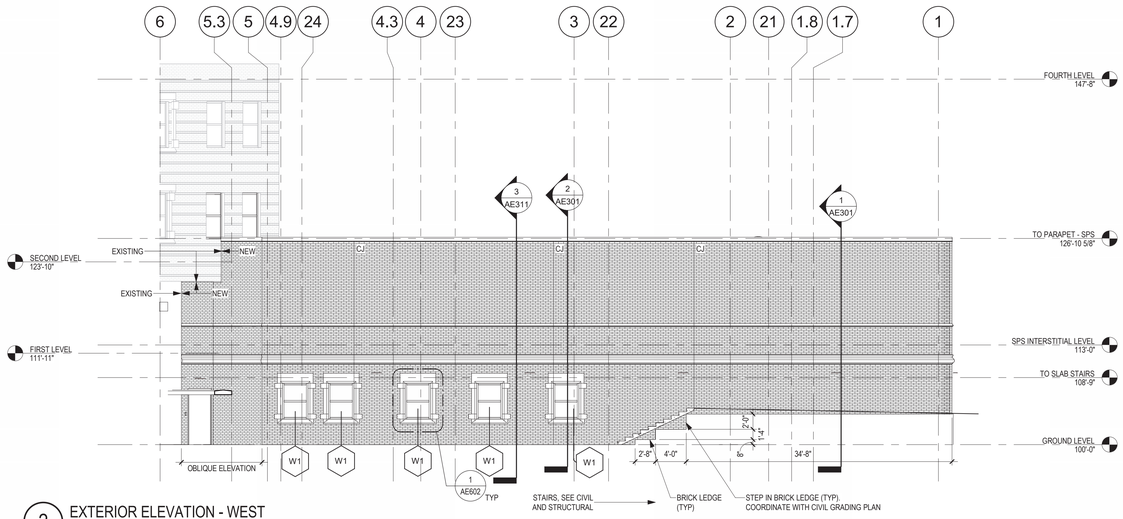

2 EXTERIOR ELEVATION - WEST
1/8" = 1'-0"

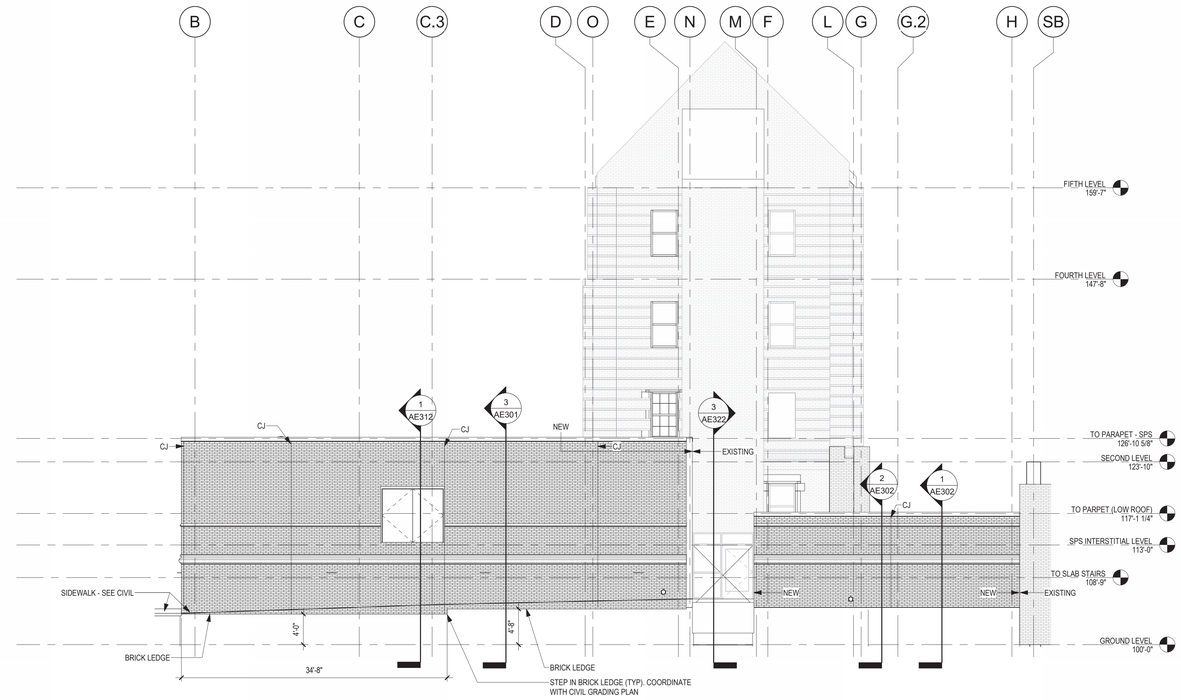

1 EXTERIOR ELEVATION - SOUTH
1/8" = 1'-0"

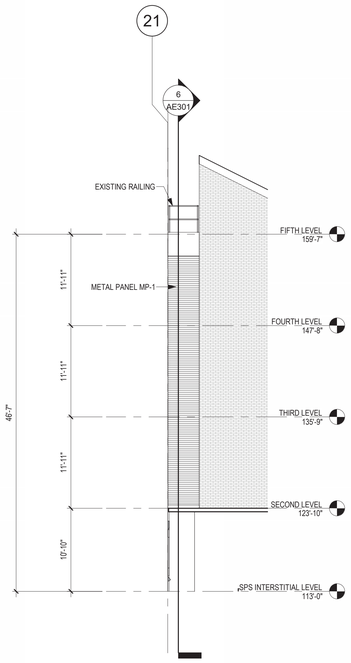

6 EXTERIOR ELEVATION - STAIR TOWER - WEST
1/8" = 1'-0"

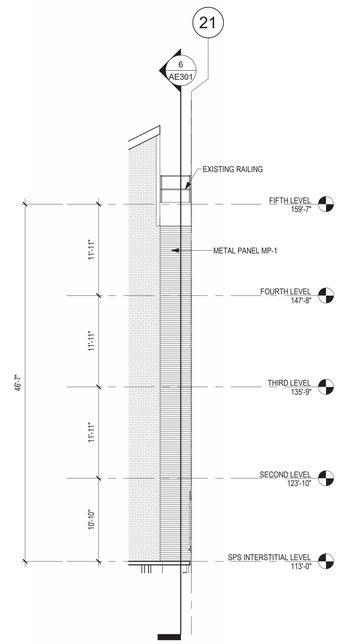

5 EXTERIOR ELEVATION - STAIR TOWER - EAST
1/8" = 1'-0"

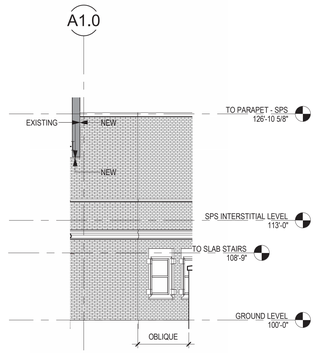

4 PARTIAL EXTERIOR ELEVATION - NORTH
1/8" = 1'-0"

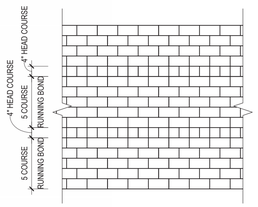

BRICK PATTERN (TYPICAL)

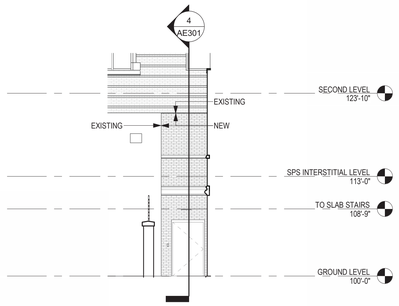

3 PARTIAL EXTERIOR ELEVATION - WEST
1/8" = 1'-0"

Revisions:	Date:

CONSULTANT

IMEG

ARCHITECT/ENGINEER OF RECORD

ANDERSON

13605 1st Ave. N. #100 Plymouth, MN 55441
P 763.412.4000 | F 763.412.4090 | ae-mn.com
Anderson Engineering of Minnesota, LLC | Proj # 16584

STAMP

REGISTERED PROFESSIONAL ENGINEER REG. NO. 9335 THOMAS A. OLESAK SOUTH DAKOTA

DATE: 08/04/2022
License # 9335

Office of Construction and Facilities Management

VA U.S. Department of Veterans Affairs

Drawing Title: EXTERIOR ELEVATIONS

Approved:

Phase: BID DOCUMENTS

FULLY SPRINKLERED

Project Title: CONSTRUCT NEW SPS

Location: Sioux Falls, SD.

Issue Date: 08/04/2022

Checked: Checker

Drawn: Author

Project Number: 438-460

Building Number: 5

Drawing Number: AE201

VA FORM 08 - 6231

7/7/2023 1:26:48 PM

C:\Users\Public\Documents\Revit Projects\16584-R21_gbatbar@ae-mn.com.rvt

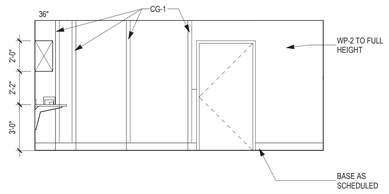

3 INTERIOR ELEVATION - CLEAN WORKROOM ASSEMBLY H15 - EAST
1/4" = 1'-0"

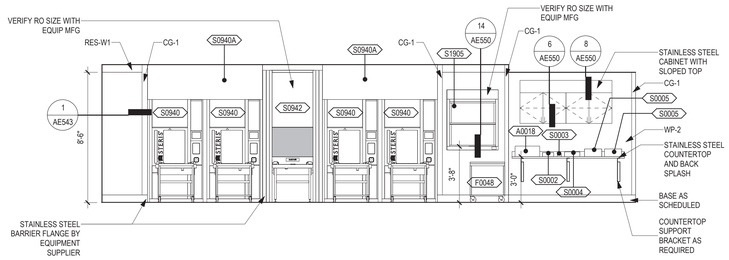

2 INTERIOR ELEVATION - CLEAN WORKROOM ASSEMBLY H15 -NORTH
1/4" = 1'-0"

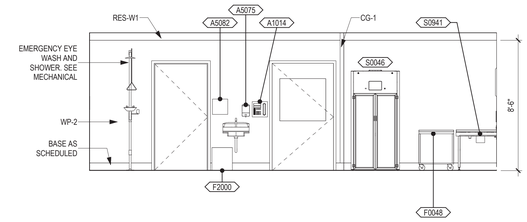

1 INTERIOR ELEVATION - CLEAN WORKROOM ASSEMBLY H15 - WEST
1/4" = 1'-0"

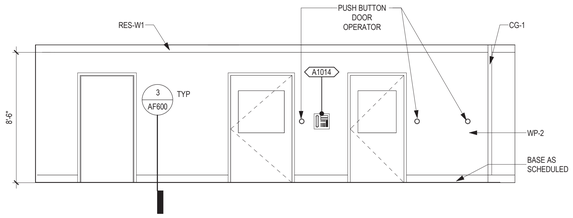

6 INTERIOR ELEVATION - DECONTAMINATION WORK AREA H21 - NORTH
1/4" = 1'-0"

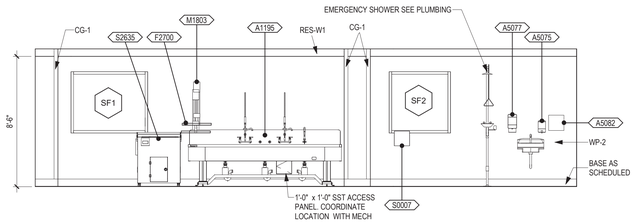

5 INTERIOR ELEVATION - DECONTAMINATION WORK AREA H21 - WEST
1/4" = 1'-0"

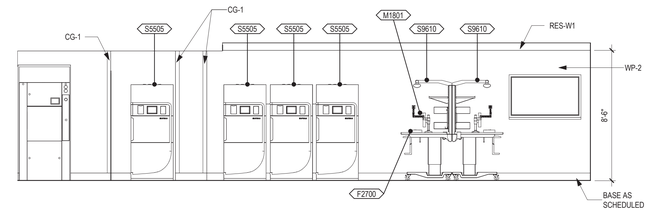

4 INTERIOR ELEVATION - CLEAN WORKROOM ASSEMBLY H15 - SOUTH
1/4" = 1'-0"

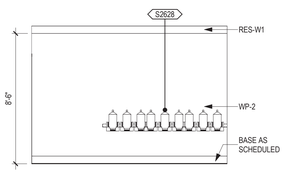

9 INTERIOR ELEVATION - DETERGENT H23 - WEST
1/4" = 1'-0"

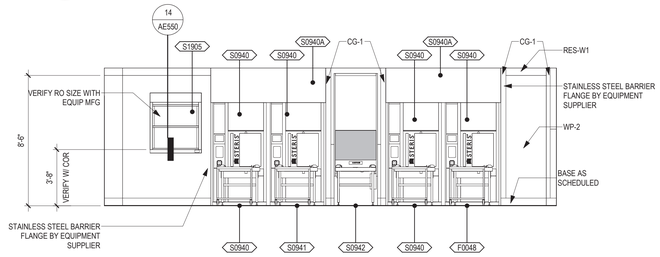

8 INTERIOR ELEVATION - DECONTAMINATION WORK AREA H21 - SOUTH
1/4" = 1'-0"

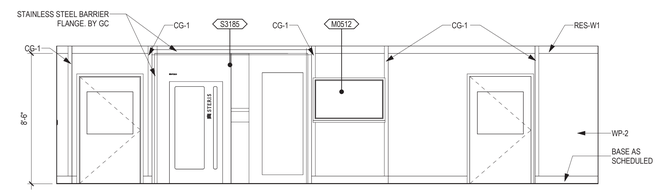

7 INTERIOR ELEVATION - DECONTAMINATION WORK AREA H21 - EAST
1/4" = 1'-0"

VERIFY ALL OPENINGS IN ALL PARTITIONS AT EQUIPMENT WITH EQUIPMENT SUPPLIER

CASEWORK GENERAL NOTES

1. FULL HEIGHT STORAGE CABINETS (UNO)
   - SHALL BE 2'-0" DEEP
   - 2'-0" MAX DOOR WIDTH
   - WARDROBE CABINETS TO BE 2'-0" DEEP
   - PROVIDE (5) FIVE ADJ PLAM SHELVES
2. BASE AND WALL CABINETS (UNO)
   - WALL CABINETS 1'-0" DEEP CLEAR INSIDE MINIMUM
   - BASE CABINETS 2'-0" DEEP
   - (1) ADJ PLAM SHELF AT 2'-0" HIGH WALL CABINETS
   - (2) ADJ PLAM SHELVES AT 2'-6" HIGH WALL CABINETS, AND
   - (3) ADJ PLAM SHELVES AT 3'-0" HIGH WALL CABINETS
3. SEE INTERIOR ELEVATIONS FOR PLAM FILLERS AND SLOPED TOPS.
4. WHERE FILLER STRIPS ARE REQUIRED, THEY SHALL BE EQUAL IN SIZE AT BOTH ENDS OF CASEWORK (UNO).
5. PROVIDE LOCKS ON INDIVIDUAL DOORS AND DRAWERS WHERE INDICATED.
6. PROVIDE CONTINUOUS SEALANT AT TOP OF BACKSPLASH/SIDESPLASHES.
7. PROVIDE 1" THICK SHELVES WHERE CABINETS ARE OVER 3'-0" WIDE.
8. PROVIDE GROMMETS AT WORKSTATIONS, INCLUDING NURSE STATIONS, RECEPTION DESKS AND OTHER WORK COUNTERS. CUT IN FIELD-PROVIDE ONE PER ELECTRICAL DEVICE BELOW COUNTER-COORDINATE LOCATIONS WITH OWNER. COLOR TO BE SELECTED BY ARCHITECT. SEE SPECIFICATION FOR GROMMET TYPES AND SIZES.
9. PROVIDE A 2" RADIUSED EDGE (IN PLAN) AT ALL OUTSIDE, EXPOSED COUNTERTOP CORNERS (UNO). ALL PLAM COUNTERTOPS SHALL HAVE A 1 1/4" THICK PLAM SQUARE EDGE NOSING (UNO)
10. ALL COUNTERTOPS ARE 2'-1" DEEP (UNO)
11. PROVIDE PLYWOOD BACKING AT ALL SOLID SURFACE COUNTERTOPS.
12. COUNTERTOP SUPPORT BRACKETS ARE PROVIDED BY THE CASEWORK SUPPLIER. PROVIDE WALL BLOCKING AT EACH SUPPORT. SPACE AT 3'-0" OC MAX.
13. COORDINATE LOCATION OF ALL UNDERCOUNTER SUPPORT WITH OWNER FURNISHED/OWNER INSTALLED EQUIPMENT.
14. NO EXPOSED FASTENERS ON CASEWORK (UNO)
15. ALL EXPOSED METAL CLIP ANGLES AND BRACKETS TO BE PAINTED TO MATCH CASEWORK.
16. ALL EXPOSED AND SEMI-EXPOSED SURFACES OF CASEWORK, SHELVING, BASE, FULL HEIGHT AND UPPER WALL CABINETS, AND FINISHED END PANELS ARE PLAM (UNO)
17. FIELD VERIFY SPACE AVAILABLE AT CABINET LOCATIONS PRIOR TO CASEWORK FABRICATION.
18. RETURN BACKSPLASH AT SIDEWALLS (UNO).
19. TUCK WALL COVERING BEHIND ALL BACKSPLASHES.
20. ALL CABINETS TO RECEIVE BASE SCHEDULED FOR ROOM (UNO).
21. COORDINATE ALL SWITCHES, UNDER-CABINET LIGHT FIXTURES AND UNDERCOUNTER RECEPTACLES WITH THE ELECTRICAL CONTRACTOR.
22. PROVIDE HANGING FILE EDGE/HARDWARE WHERE FILE DRAWERS ARE INDICATED
23. PROVIDE A 1/4" GAP BETWEEN BOTTOM EDGE OF COUNTERTOP AND TOP EDGE OF DOOR FRONTS/DOORS OF CABINETS
24. REFER TO FINISH PLAN GENERAL NOTES FOR CASEWORK FINISHES (UNO)
25. BASE AS SCHEDULED (UNO)
26. PLAM COUNTERTOPS TO RECEIVE 3mm FLAT PVC EDGE (UNO).
27. NUMBERS SHOWN BELOW BASE CABINETS AND ABOVE WALL CABINETS REFER TO NOMINAL WIDTH DIMENSIONS, IN INCHES, FOR THAT CABINET. SEE REFERENCE DETAILS FOR ADDITIONAL INFORMATION.

INTERIOR ELEVATION GENERAL NOTES

1. SEE RCP FOR SOFFIT AND BULKHEAD LOCATIONS AND DETAILS
2. INSTALL CERAMIC TILE (CT) BEHIND ALL WALL MOUNTED ITEMS WHERE CT IS CALLED OUT IN FINISH PLAN AND SCHEDULE. WHERE ANY TOILET ACCESSORY OVERLAPS OR EXTENDS BEYOND A CT WAINSCOT AND PROJECTS ONTO THE ADJACENT WALL, INSTALL A HARDBOARD BACKER FULL SIZE OF THE OVERLAP AREA AND OF A THICKNESS TO ALIGN FLUSH WITH THE FACE OF THE CT. HOLD FACE OF HARDBOARD BACK 3/8" FROM THE FACE OF THE ACCESSORY ON ALL SIDES. PROVIDE SANITARY SEALANT AROUND ALL EDGES OF HARDBOARD BACKING PIECE.
3. COORDINATE ALL PLUMBING FIXTURES, CONTROLS AND VENTILATION REQUIREMENTS WITH MECHANICAL CONTRACTOR
4. COORDINATE ALL ELECTRICAL FIXTURES, OUTLETS, SWITCHES AND POWER REQUIREMENTS WITH ELECTRICAL CONTRACTOR
5. VERIFY OPENING SIZES AND LOCATIONS OF OWNER FURNISHED, OWNER INSTALLED EQUIPMENT AND FURNISHINGS TO ASSURE NO INTERFERENCE WITH COUNTER SUPPORT BRACKETS, APRONS, ETC.

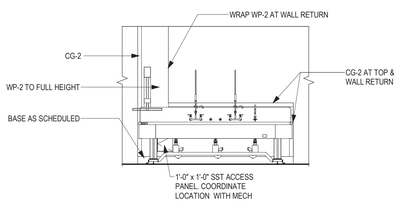

13 INTERIOR ELEVATION - PARTIAL - DECONTAMINATION WORK AREA H21 - WEST
1/4" = 1'-0"

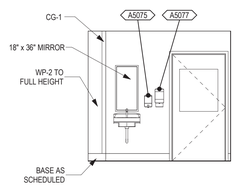

12 INTERIOR ELEVATION - H25 - SOUTH
1/4" = 1'-0"

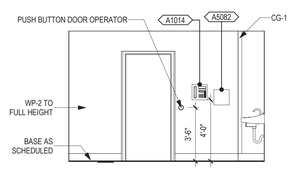

11 INTERIOR ELEVATION - H25 - EAST
1/4" = 1'-0"

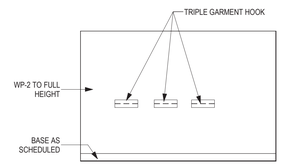

10 INTERIOR ELEVATION - H25 - WEST
1/4" = 1'-0"

CASEWORK ELEVATION REFERENCE DIAGRAM

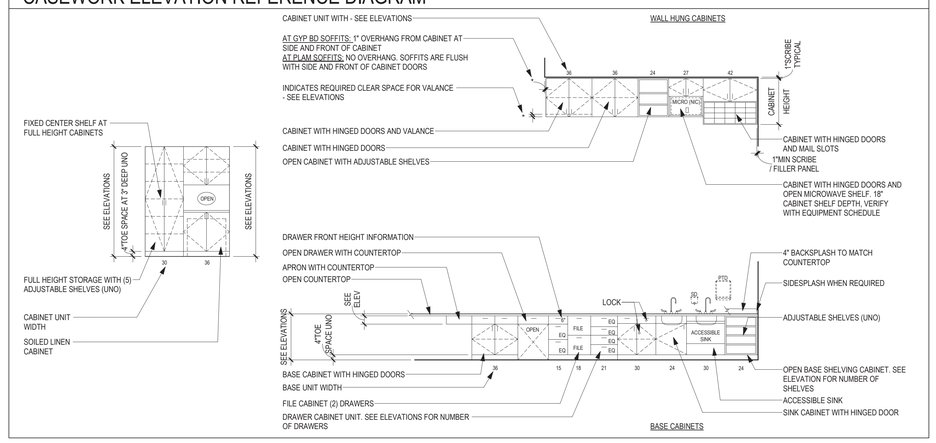

Revisions:	Date:

CONSULTANT

IMEG

ARCHITECT/ENGINEER OF RECORD

ANDERSON

13605 1st Ave. N. #100 Plymouth, MN 55441
P 763.412.4000 | F 763.412.4090 | ae-mn.com
Anderson Engineering of Minnesota, LLC | Proj # 16584

STAMP

LICENSED PROFESSIONAL ARCHITECT — THOMAS A. OLESAK — SOUTH DAKOTA

DATE: 08/04/2022
License # 9335

Office of Construction and Facilities Management

VA U.S. Department of Veterans Affairs

Drawing Title: INTERIOR ELEVATIONS

Approved:

Phase: BID DOCUMENTS

FULLY SPRINKLERED

Project Title: CONSTRUCT NEW SPS

Location: Sioux Falls, SD.

Issue Date: 08/04/2022 | Checked: Checker | Drawn: Author

Project Number: 438-460

Building Number: 5

Drawing Number: AE211

VA FORM 08 - 6231

7/7/2023 1:26:56 PM

C:\Users\Public\Documents\Revit Projects\16584-R21_gbarbari@ae-mn.com.rvt

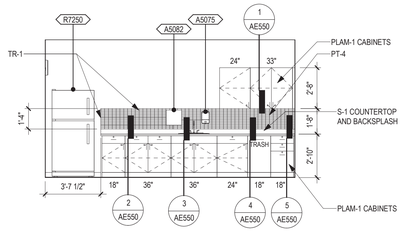

5 INTERIOR ELEVATION - STAFF LOUNGE H8 - SOUTH
1/4" = 1'-0"

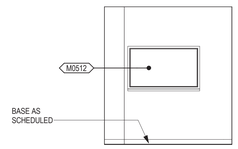

4 INTERIOR ELEVATION - STAFF LOUNGE H8 - NORTH
1/4" = 1'-0"

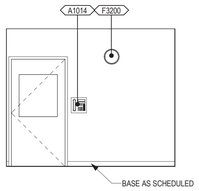

3 INTERIOR ELEVATION - STAFF LOUNGE H8 - EAST
1/4" = 1'-0"

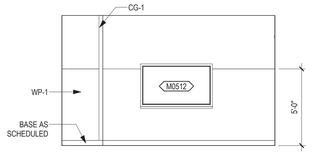

2 INTERIOR ELEVATION - CONFERENCE/TAINING ROOM H2 - WEST
1/4" = 1'-0"

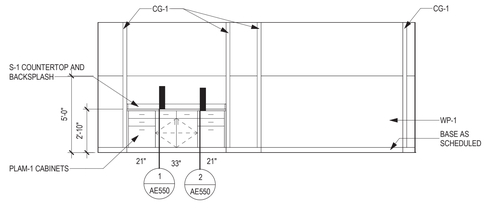

1 INTERIOR ELEVATION - CONFERENCE/TAINING ROOM H2 - SOUTH
1/4" = 1'-0"

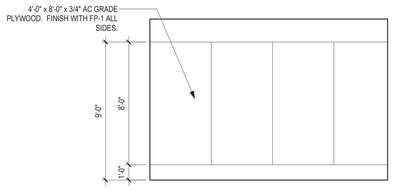

9 INTERIOR ELEVATION - TYPICAL TELECOM ROOM - BACK
1/4" = 1'-0"

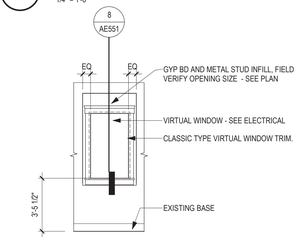

8 INTERIOR ELEVATION - VIRTUAL WINDOW INFILL AT EXISTING
1/4" = 1'-0"

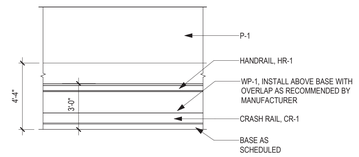

7 CORRIDOR WALL PROTECTION - TYP
1/4" = 1'-0"

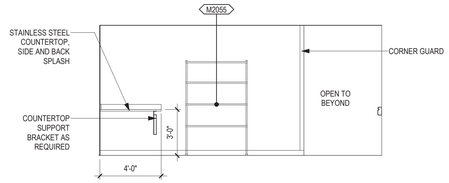

6 ELEVATION - CORRIDOR C50 - WEST
1/4" = 1'-0"

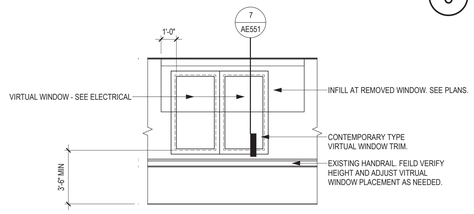

13 INTERIOR ELEVATION - VIRTUAL WINDOW - CORRIDOR C43 - WEST
1/4" = 1'-0"

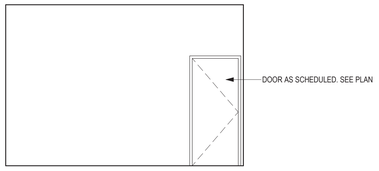

12 INTERIOR ELEVATION - TYPICAL TELECOM ROOM - DOOR
1/4" = 1'-0"

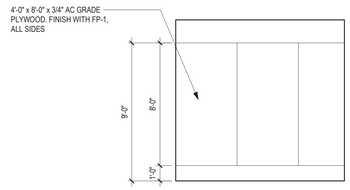

11 INTERIOR ELEVATION - TYPICAL TELECOM ROOM - SIDE 2
1/4" = 1'-0"

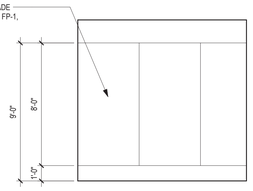

10 INTERIOR ELEVATION - TYPICAL TELECOM ROOM - SIDE 1
1/4" = 1'-0"

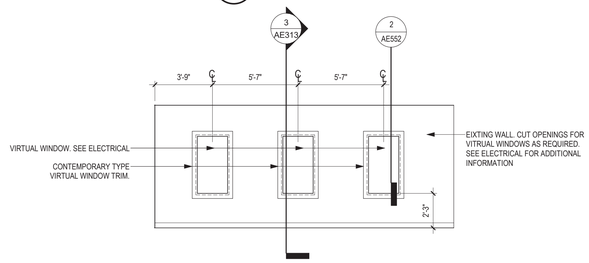

15 INTERIOR ELEVATION - VIRTUAL WINDOW - DR WORK ROOM D18 - WEST
1/4" = 1'-0"

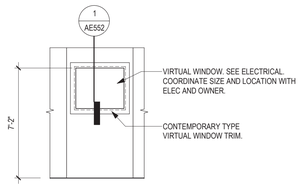

14 INTERIOR ELEVATION - VITRUAL WINDOW - ELEVATOR LOBBY G79-5
1/4" = 1'-0"

Revisions:	Date:

CONSULTANT

IMEG

ARCHITECT/ENGINEER OF RECORD

ANDERSON

13605 1st Ave. N. #100 Plymouth, MN 55441
P 763.412.4000 | F 763.412.4090 | ae-mn.com
Anderson Engineering of Minnesota, LLC | Proj # 16584

STAMP

REGISTERED PROFESSIONAL ARCHITECT
THOMAS A. OLESAK
SOUTH DAKOTA

DATE: 08/04/2022
License # 9335

Office of Construction and Facilities Management

VA U.S. Department of Veterans Affairs

Drawing Title: INTERIOR ELEVATIONS

Approved:

Phase: BID DOCUMENTS

FULLY SPRINKLERED

Project Title: CONSTRUCT NEW SPS

Location: Sioux Falls, SD.

Issue Date: 08/04/2022

Checked: Checker

Drawn: Author

Project Number: 438-460

Building Number: 5

Drawing Number: AE212

VA FORM 08 - 6231

7/7/2023 1:27:00 PM

C:\Users\Public\Documents\Revit Projects\16584-R21_gbarbar@ae-mn.com.rvt

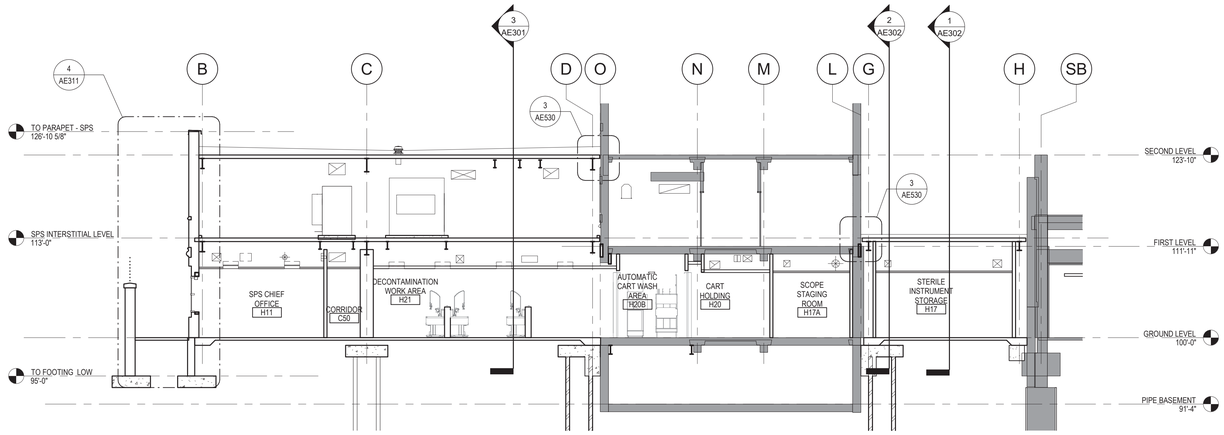

2 BUILDING SECTION - ADDITION AT EXISTING BUILDING 5 - EAST / WEST
1/8" = 1'-0"

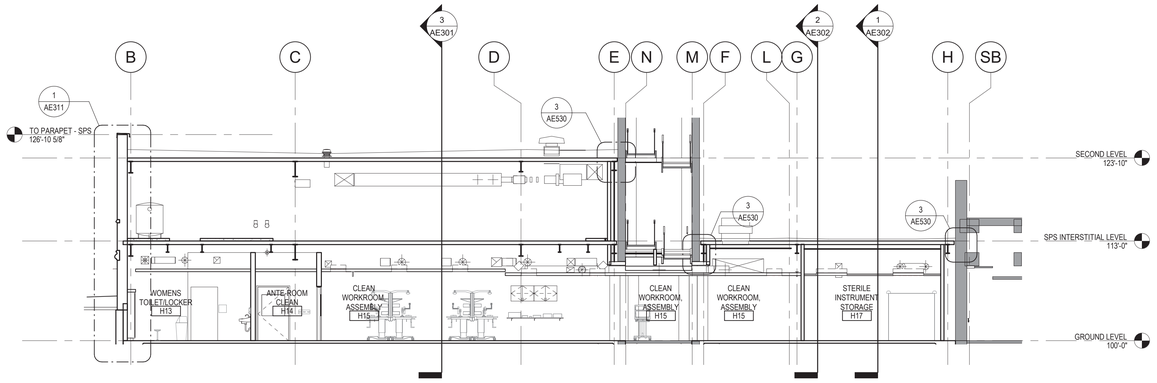

1 BUILDING SECTION - ADDITION AT EXISTING STAIR TOWER - EAST / WEST
1/8" = 1'-0"

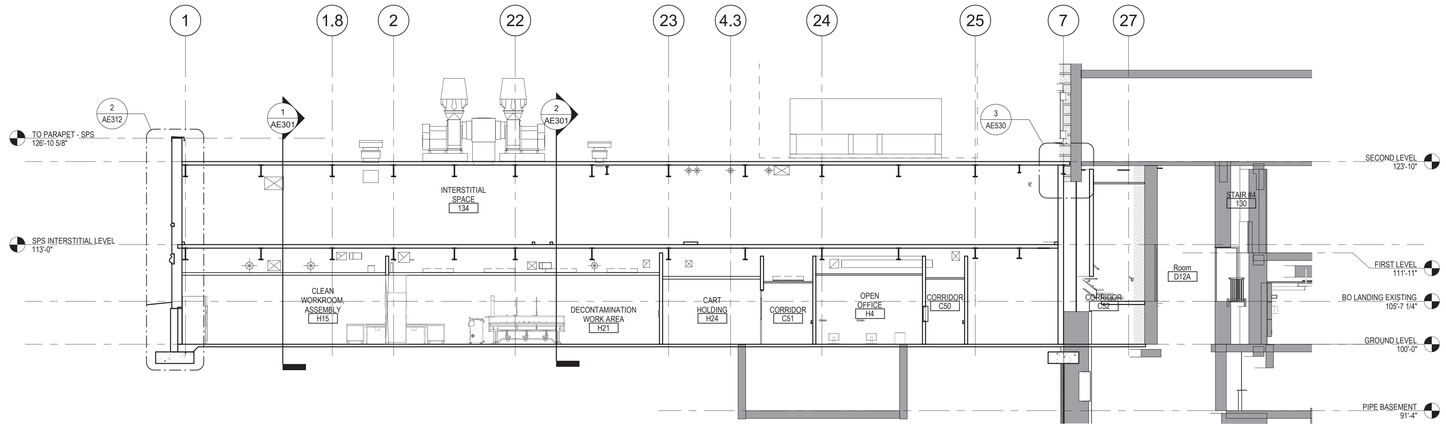

3 BUILDING SECTION - STERILE PROCESSING AND INTERSTITIAL - NORTH / SOUTH
1/8" = 1'-0"

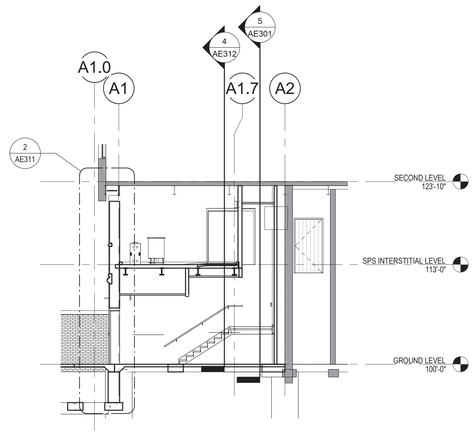

4 BUILDING SECION - EXIT CORRIDOR @ EXISTING - EAST / WEST
1/8" = 1'-0"

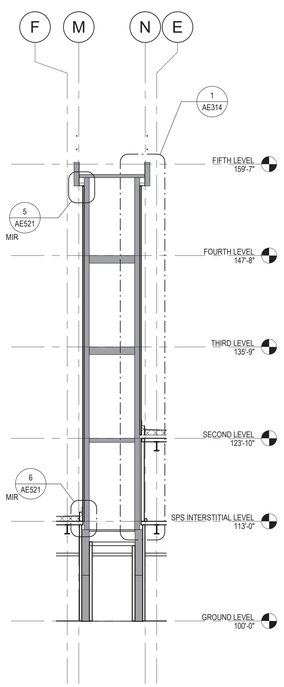

6 SECTION - EXISING STAIR TOWER - EAST/WEST
1/8" = 1'-0"

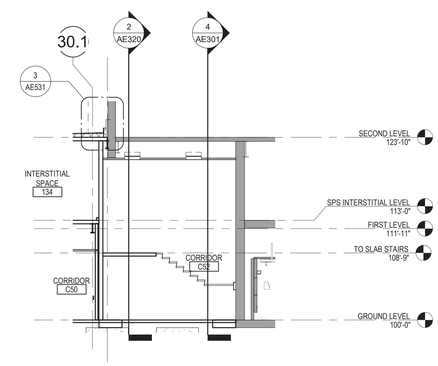

5 BUILDING SECTION - EXIT CORRIDOR @ EXISTING - NORTH / SOUTH
1/8" = 1'-0"

Revisions:	Date:

CONSULTANT

IMEG

ARCHITECT/ENGINEER OF RECORD

ANDERSON
13605 1st Ave. N. #100 Plymouth, MN 55441
P 763.412.4000 | F 763.412.4090 | ae-mn.com
Anderson Engineering of Minnesota, LLC | Proj # 16584

STAMP
REGISTERED PROFESSIONAL ARCHITECT REG. NO. 9335 THOMAS A. OLESAK SOUTH DAKOTA
DATE: 08/04/2022
License # 9335

Office of Construction and Facilities Management

VA U.S. Department of Veterans Affairs

Drawing Title: BUILDING SECTIONS

Approved:

Phase: BID DOCUMENTS

FULLY SPRINKLERED

Project Title: CONSTRUCT NEW SPS

Location: Sioux Falls, SD.

Issue Date: 08/04/2022

Checked: Checker

Drawn: Author

Project Number: 438-460

Building Number: 5

Drawing Number: AE301

VA FORM 08 - 6231

7/7/2023 1:27:07 PM

C:\Users\Public\Documents\Revit Projects\16584-R21_gbatbar@ae-mn.com.rvt

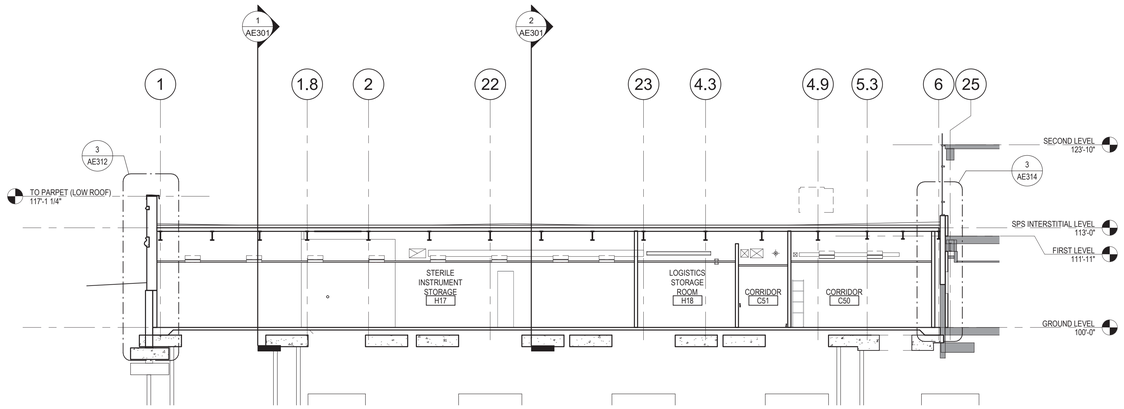

2 BUILDING SECTION - SINGLE STORY ADDITOIN @ ELEVATOR TOWER LINK - NORTH / SOUTH

1/8" = 1'-0"

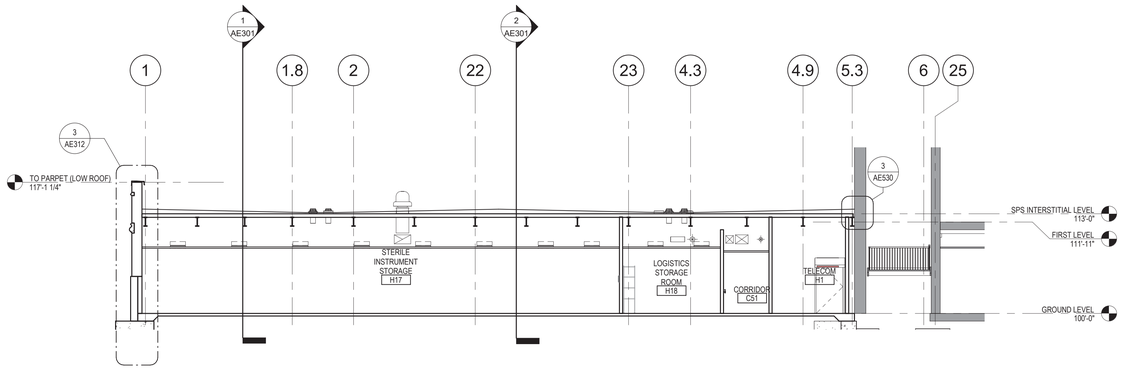

1 BUILDING SECTION - SINGLE STORY / LOW ROOF EAST SIDE - NORTH / SOUTH

1/8" = 1'-0"

7/7/2023 1:27:10 PM

C:\Users\Public\Documents\Revit Projects\16584-R21_gbartusi@ae-mn.com.rvt

Revisions:	Date:

CONSULTANT

IMEG

ARCHITECT/ENGINEER OF RECORD

ANDERSON

13605 1st Ave. N. #100 Plymouth, MN 55441
P 763.412.4000 | F 763.412.4090 | ae-mn.com
Anderson Engineering of Minnesota, LLC | Proj # 16584

STAMP

REGISTERED PROFESSIONAL ARCHITECT
STATE OF SOUTH DAKOTA
8335
NICHOLAS A. OLESAK

DATE: 08/04/2022
License # 9335

Office of Construction and Facilities Management

VA U.S. Department of Veterans Affairs

Drawing Title: BUILDING SECTIONS

Approved:

Phase: BID DOCUMENTS

FULLY SPRINKLERED

Project Title: CONSTRUCT NEW SPS

Location: Sioux Falls, SD.

Issue Date: 08/04/2022

Checked: Checker

Drawn: Author

Project Number: 438-460

Building Number: 5

Drawing Number: AE302

VA FORM 08 - 6231

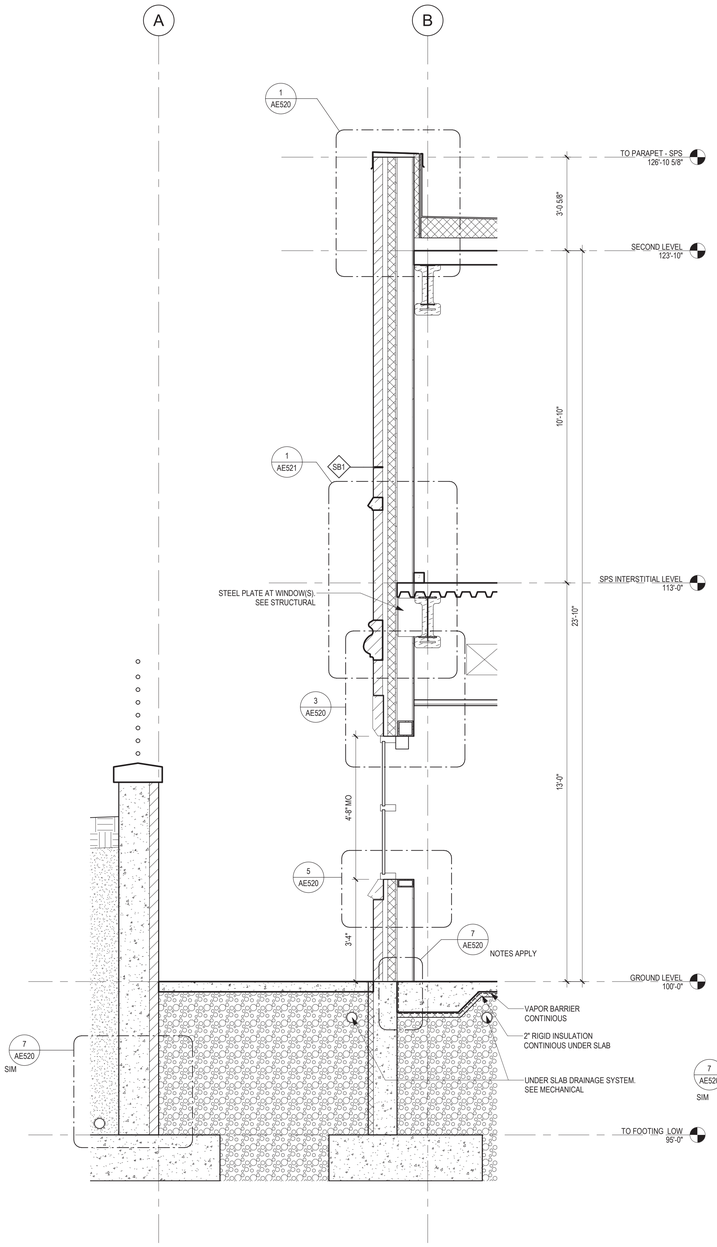

4 WALL SECTION - NORTHWEST WALL AT WINDOW (TYP)
1/2" = 1'-0"

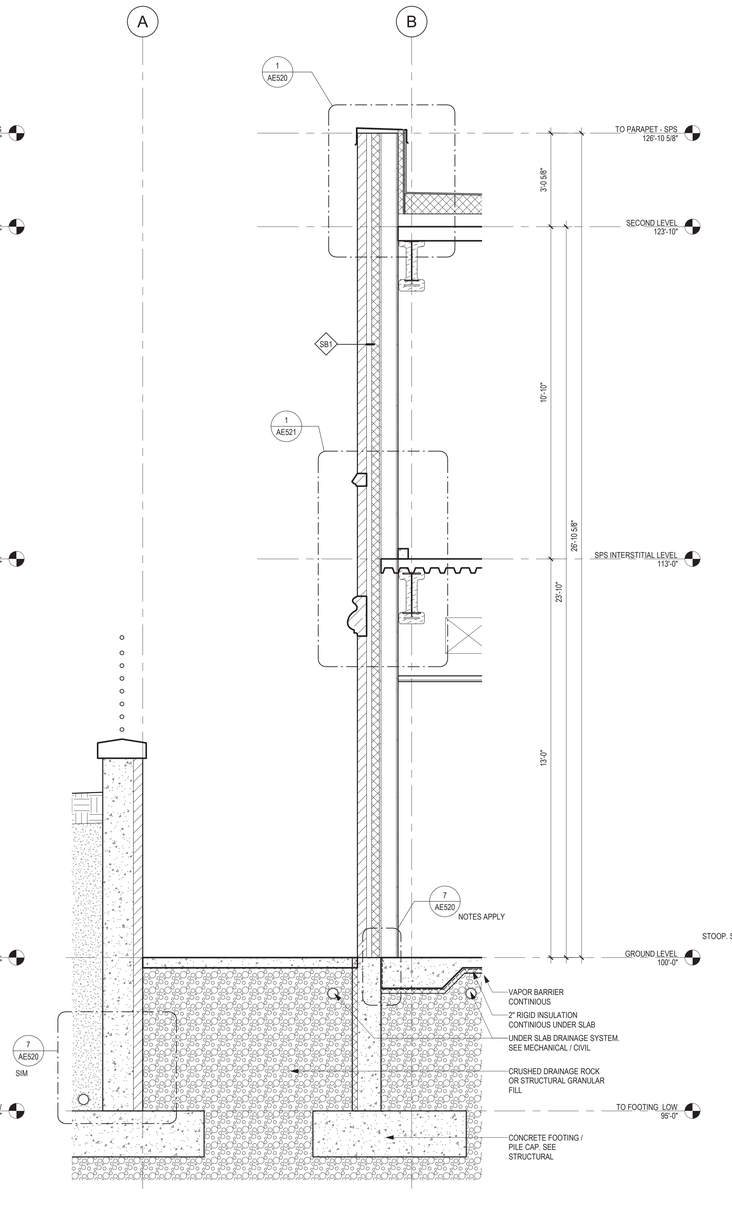

3 WALL SECTION - TYPICAL NORTHWEST WALL & RETAINING WALL
1/2" = 1'-0"

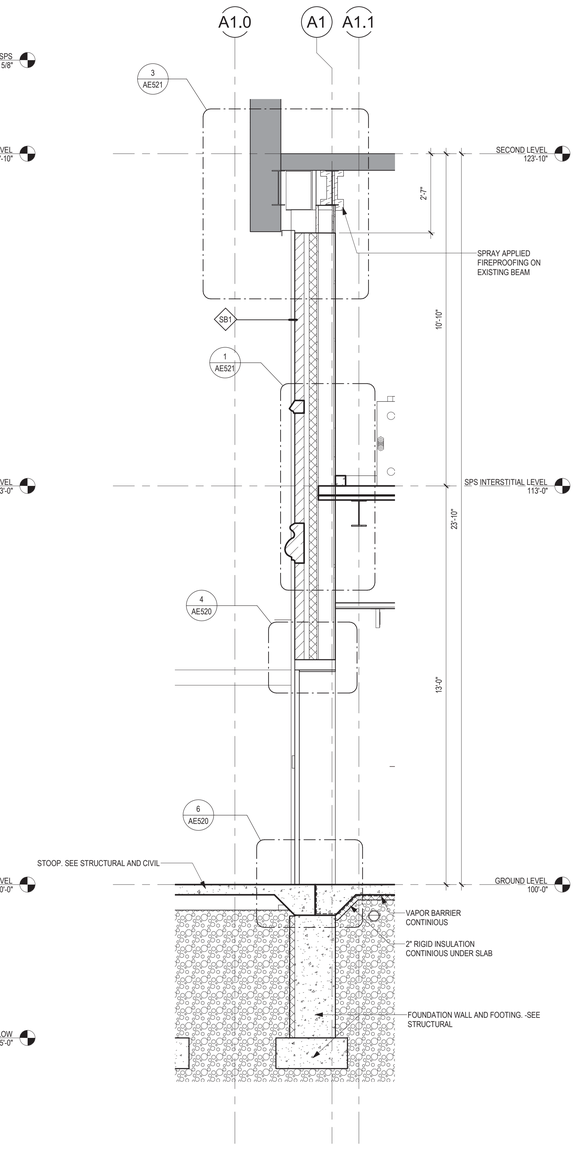

2 WALL SECTION - WEST WALL @ EXISTING SECOND LEVEL
1/2" = 1'-0"

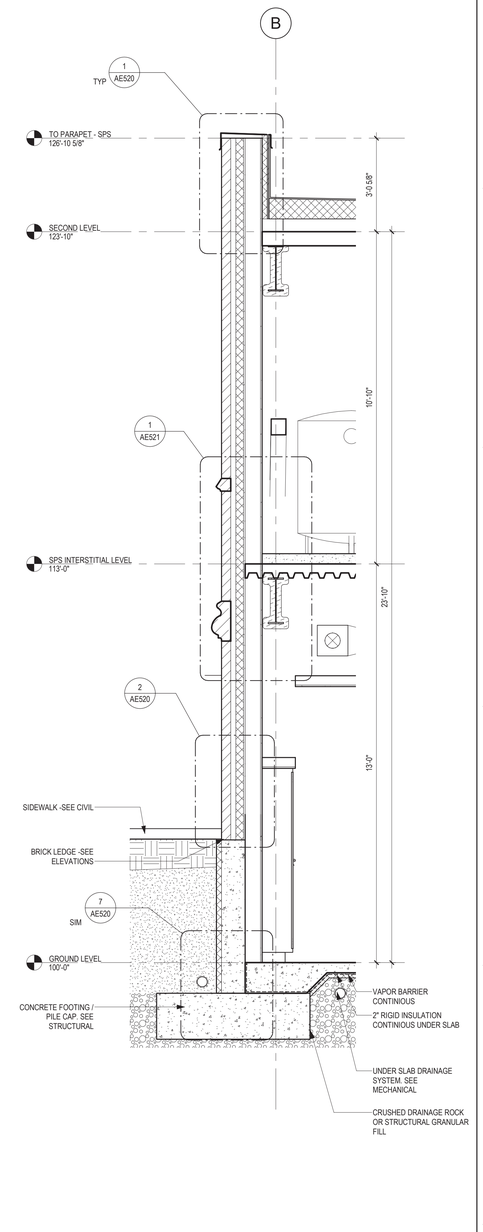

1 WALL SECTION - NORTHWEST WALL TYPICAL
1/2" = 1'-0"

Revisions:	Date:

CONSULTANT

IMEG

ARCHITECT/ENGINEER OF RECORD

ANDERSON

13605 1st Ave. N. #100 Plymouth, MN 55441
P 763.412.4000 | F 763.412.4090 | ae-mn.com
Anderson Engineering of Minnesota, LLC | Proj # 16584

STAMP

REGISTERED PROFESSIONAL ARCHITECT
REG. NO. 9335
JONATHAN A. OLESAK
SOUTH DAKOTA

DATE: 08/04/2022
License # 9335

Office of Construction and Facilities Management

VA U.S. Department of Veterans Affairs

Drawing Title: WALL SECTIONS

Approved:

Phase: BID DOCUMENTS

FULLY SPRINKLERED

Project Title: CONSTRUCT NEW SPS

Location: Sioux Falls, SD.

Issue Date: 08/04/2022

Checked: Checker

Drawn: Author

Project Number: 438-460

Building Number: 5

Drawing Number: AE311

VA FORM 08 - 6231

7/7/2023 1:27:13 PM

C:\Users\Public\Documents\Revit Projects\16584-R21_gbartsel@ae-mn.com.rvt

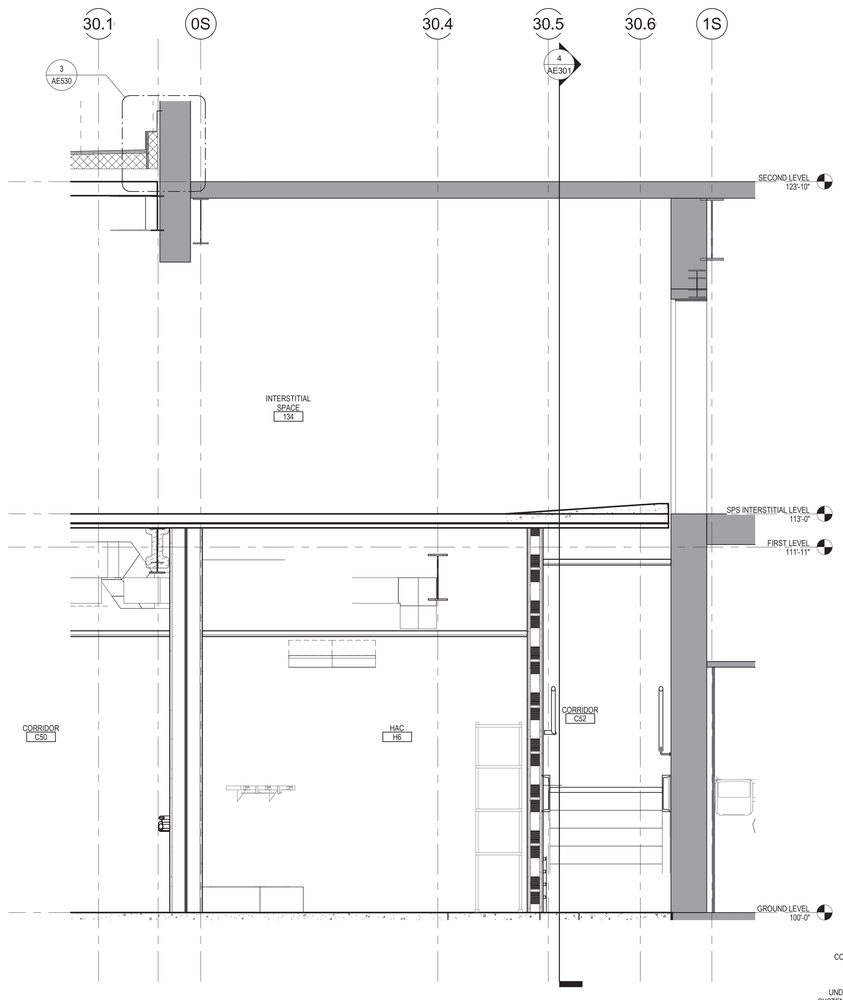

4 WALL SECTION - ADDITION AT EXISTING MECHANICAL
1/2" = 1'-0"

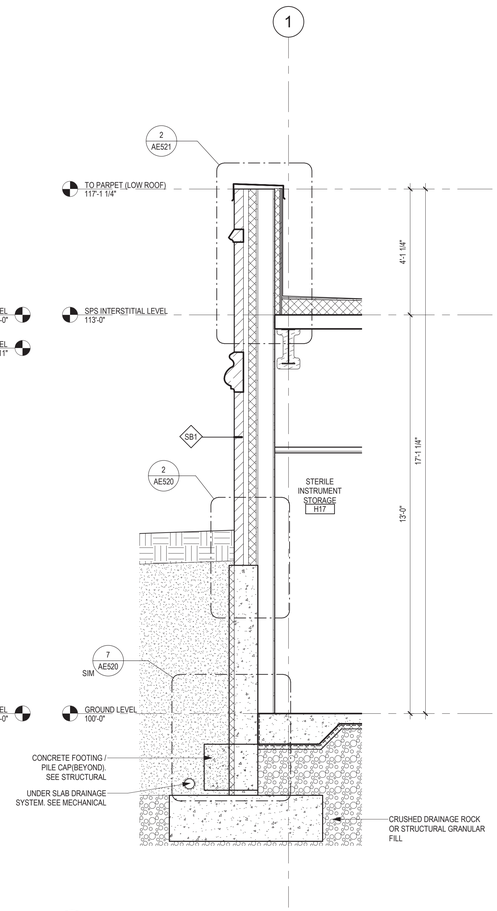

3 WALL SECTION - WALL AT LOW ROOF (TYP) - SOUTHWEST
1/2" = 1'-0"

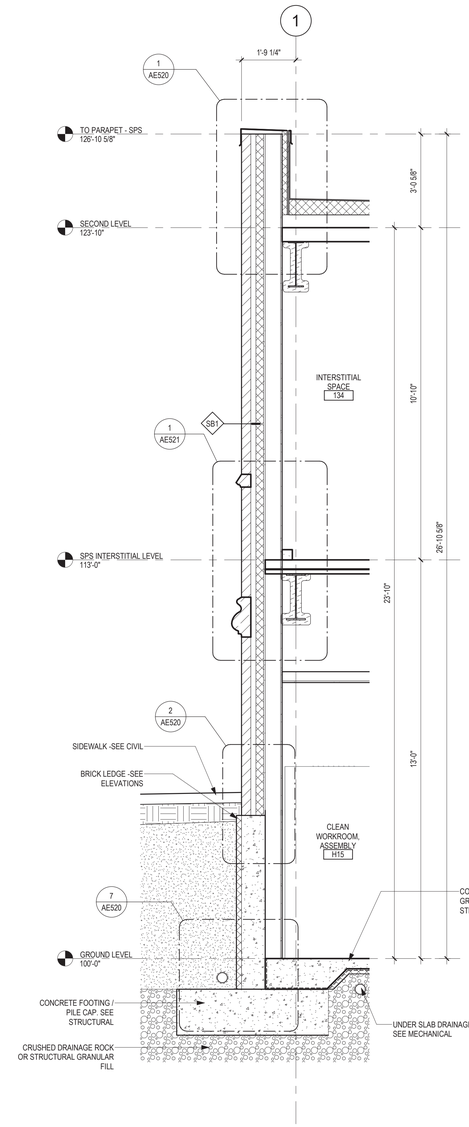

2 WALL SECTION - TYPICAL WALL @ INTERSTITAL - SOUTHWEST
1/2" = 1'-0"

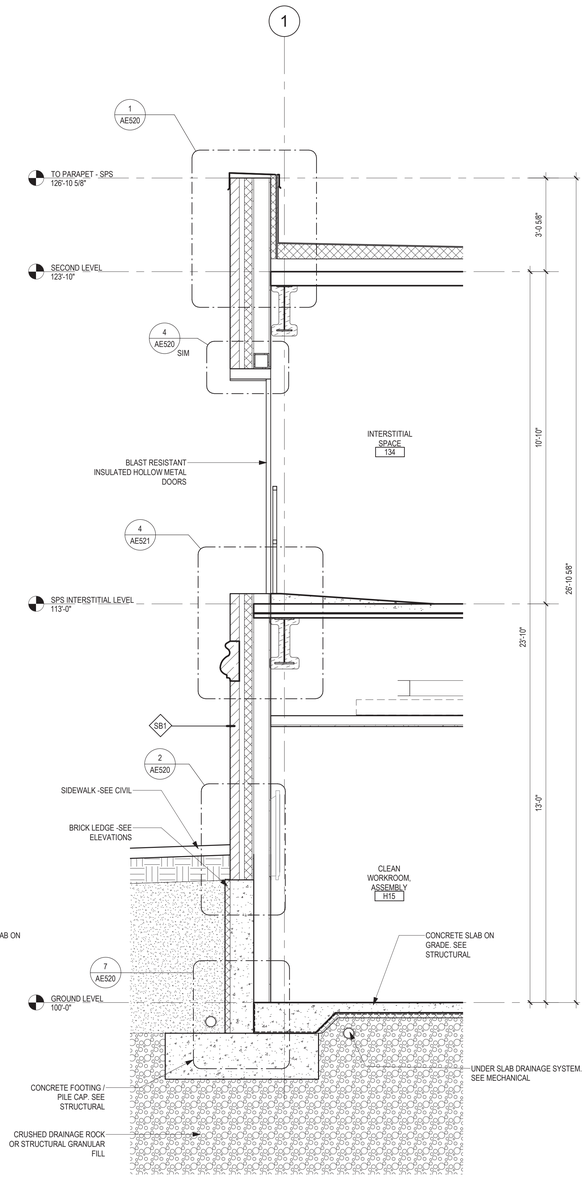

1 WALL SECTION - WALL AT INTERSTITIAL DOOR - SOUTHWEST
1/2" = 1'-0"

Revisions:	Date:

CONSULTANT

IMEG

ARCHITECT/ENGINEER OF RECORD

ANDERSON

13605 1st Ave. N. #100 Plymouth, MN 55441
P 763.412.4000 | F 763.412.4090 | ae-mn.com
Anderson Engineering of Minnesota, LLC | Proj # 16584

STAMP

REGISTERED PROFESSIONAL ENGINEER
REG. NO. 9335
NICHOLAS A. OLESAK
SOUTH DAKOTA

DATE: 08/04/2022
License # 9335

Office of Construction and Facilities Management

VA U.S. Department of Veterans Affairs

Drawing Title: WALL SECTIONS

Approved:

Phase: BID DOCUMENTS

FULLY SPRINKLERED

Project Title: CONSTRUCT NEW SPS

Location: Sioux Falls, SD.

Issue Date: 08/04/2022

Checked: Checker

Drawn: Author

Project Number: 438-460

Building Number: 5

Drawing Number: AE312

VA FORM 08 - 6231

7/7/2023 1:27:17 PM

C:\Users\Public\Documents\Revit Projects\16584-R21_jpoehlert@ae-mn.com.rvt

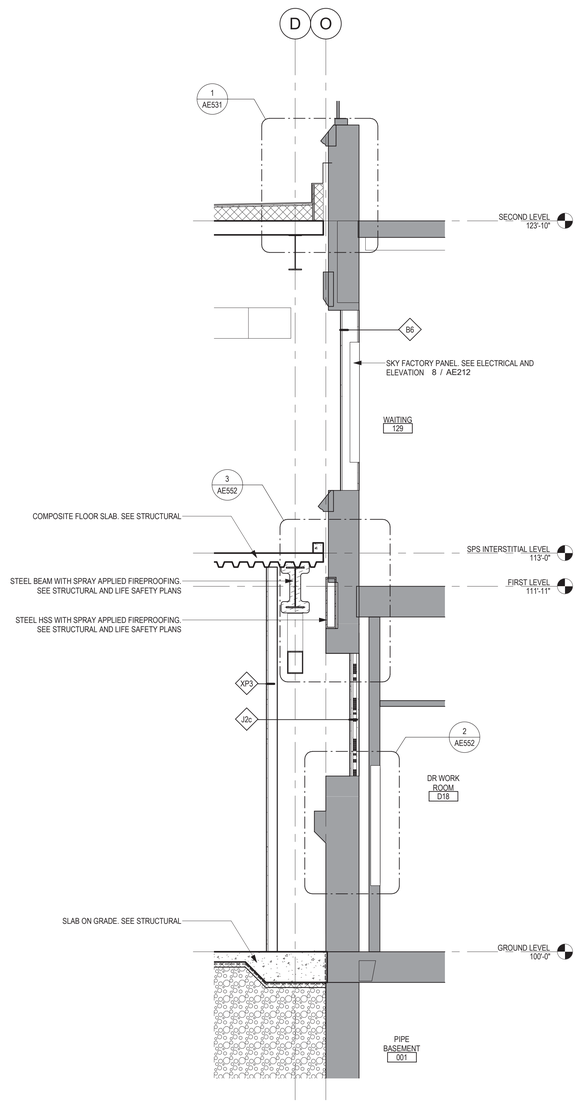

3 WALL SECTION -EXISTING (TYP)
1/2" = 1'-0"

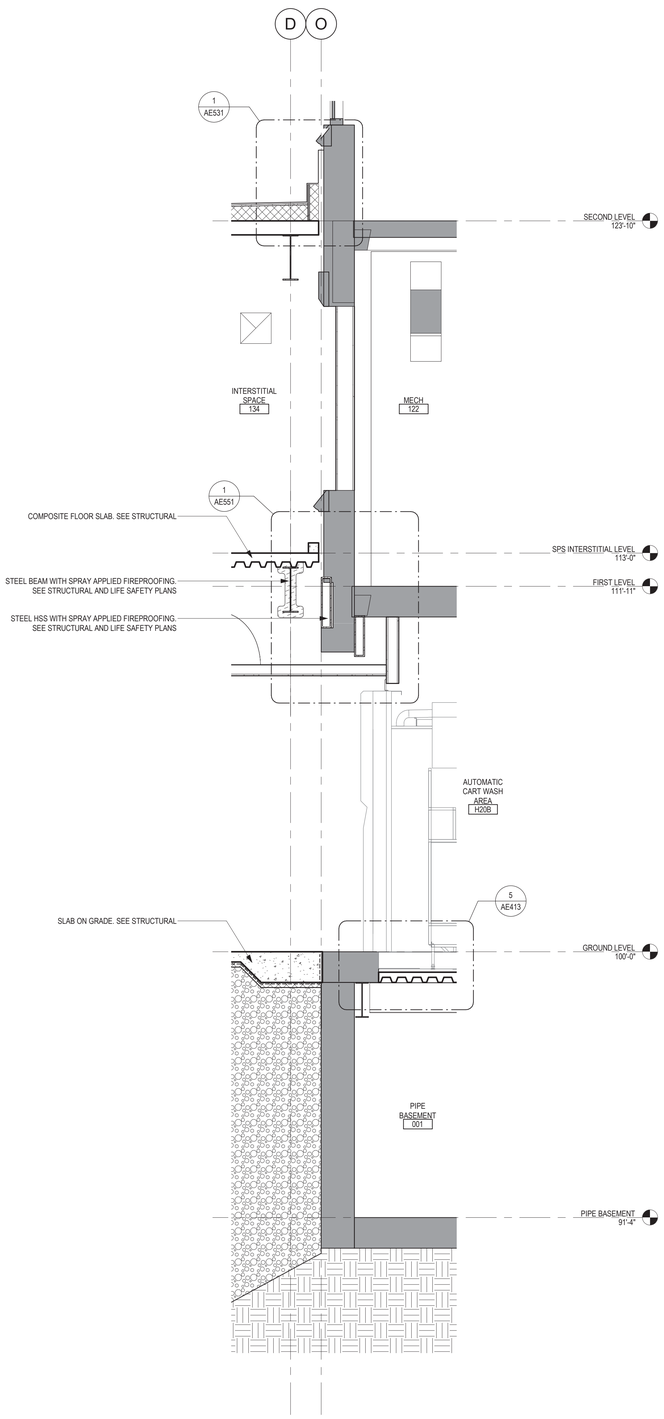

2 WALL SECTION -ADDITION & CART WASHER
1/2" = 1'-0"

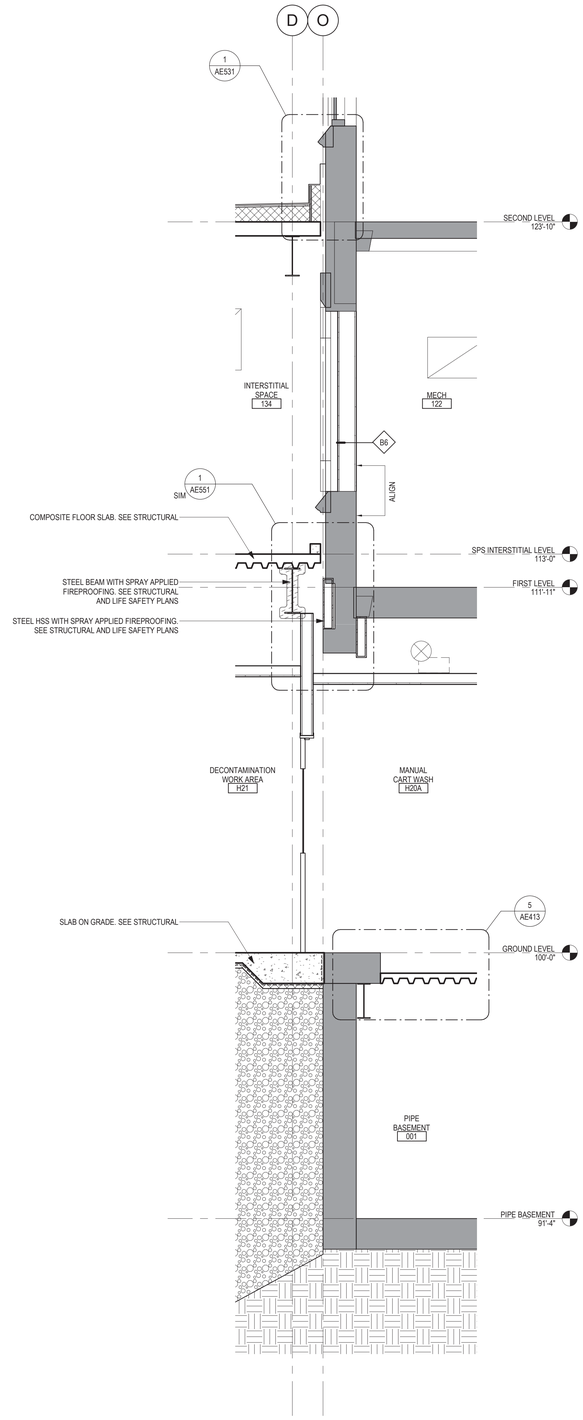

1 WALL SECTION -ADDITOIN @ MANUAL CART WASH AND WINDOW INFILL
1/2" = 1'-0"

Revisions:	Date:

CONSULTANT

IMEG

ARCHITECT/ENGINEER OF RECORD

ANDERSON

13605 1st Ave. N. #100 Plymouth, MN 55441
P 763.412.4000 | F 763.412.4090 | ae-mn.com
Anderson Engineering of Minnesota, LLC | Proj # 16584

STAMP

REGISTERED PROFESSIONAL ARCHITECT REG. NO. 3935 THOMAS A. OLESAK SOUTH DAKOTA

DATE: 08/04/2022
License # 9335

Office of Construction and Facilities Management

VA U.S. Department of Veterans Affairs

Drawing Title: WALL SECTIONS

Approved:

Phase: BID DOCUMENTS

FULLY SPRINKLERED

Project Title: CONSTRUCT NEW SPS

Location: Sioux Falls, SD.

Issue Date: 08/04/2022

Checked: Checker

Drawn: Author

Project Number: 438-460

Building Number: 5

Drawing Number: AE313

VA FORM 08 - 6231

7/7/2023 1:27:26 PM

C:\Users\Public\Documents\Revit Projects\16584-R21_gbeatty@ae-mn.com.rvt

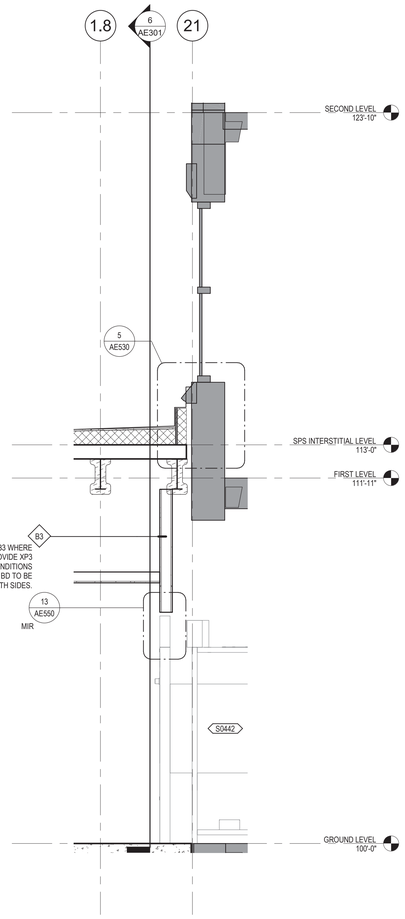

4 WALL SECTION - LOW ROOF AT EXISTING WINDOW - SOUTH
1/2" = 1'-0"

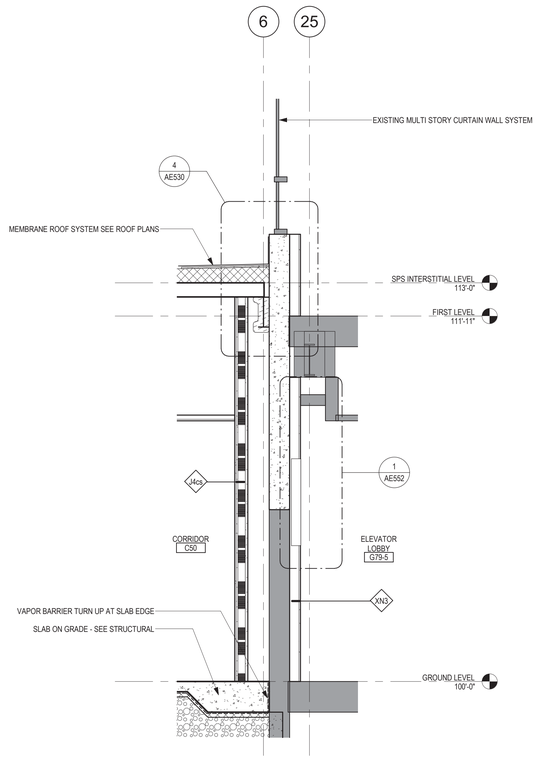

3 WALL SECTION - INFILL AT MODIFIED CURTAIN WALL
1/2" = 1'-0"

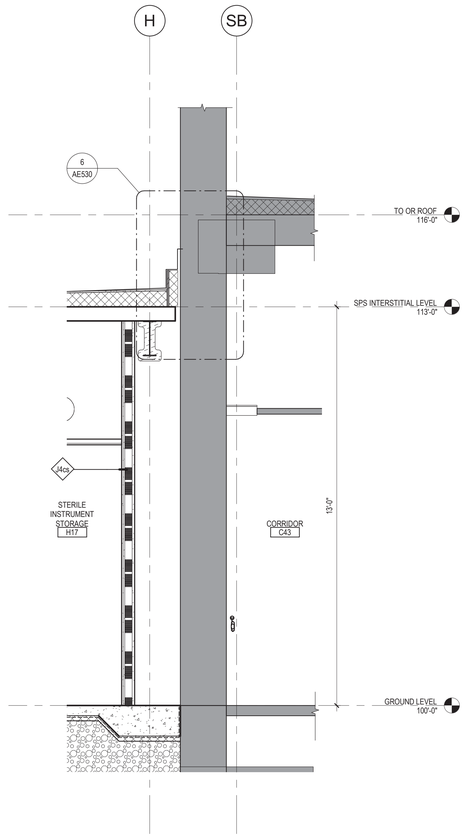

2 WALL SECTION - LOW ROOF @ SURGERY
1/2" = 1'-0"

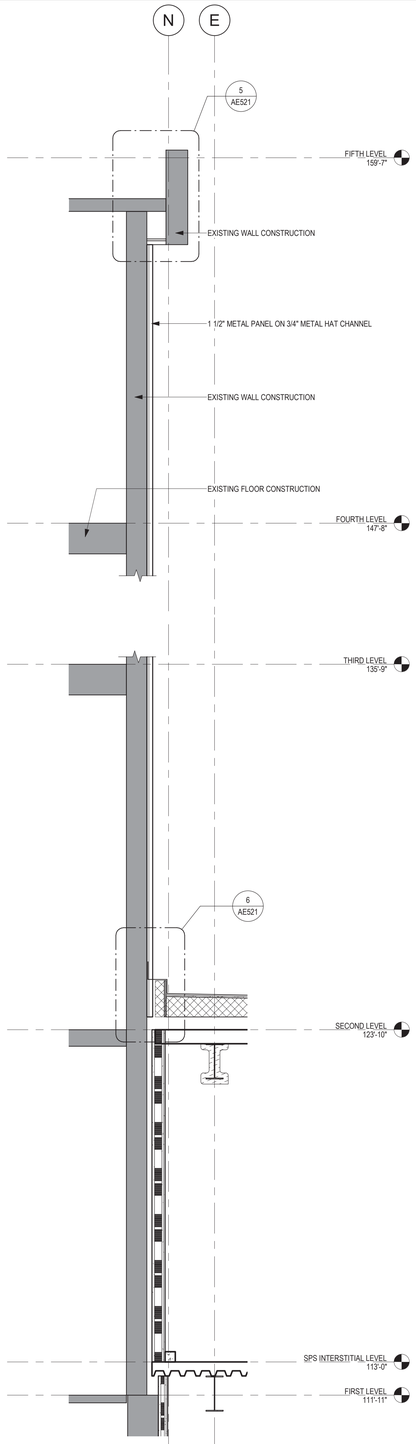

1 SECTION - METAL PANEL @ EXISING STAIR TOWER - TYP
1/2" = 1'-0"

Revisions:	Date:

CONSULTANT

IMEG

ARCHITECT/ENGINEER OF RECORD

ANDERSON

13605 1st Ave. N. #100 Plymouth, MN 55441
P 763.412.4000 | F 763.412.4090 | ae-mn.com
Anderson Engineering of Minnesota, LLC | Proj # 16584

STAMP

REGISTERED PROFESSIONAL ENGINEER
REGISTERED ARCHITECT
THOMAS A. OLESIAK
SOUTH DAKOTA

DATE: 08/04/2022
License # 9335

Office of Construction and Facilities Management

VA U.S. Department of Veterans Affairs

Drawing Title: WALL SECTIONS

Approved:

Phase: BID DOCUMENTS

FULLY SPRINKLERED

Project Title: CONSTRUCT NEW SPS

Location: Sioux Falls, SD.

Issue Date: 08/04/2022

Checked: Checker

Drawn: Author

Project Number: 438-460

Building Number: 5

Drawing Number: AE314

VA FORM 08 - 6231

7/7/2023 1:27:23 PM

C:\Users\Public\Documents\Revit Projects\16584-R21_jbarfuel@ae-mn.com.rvt

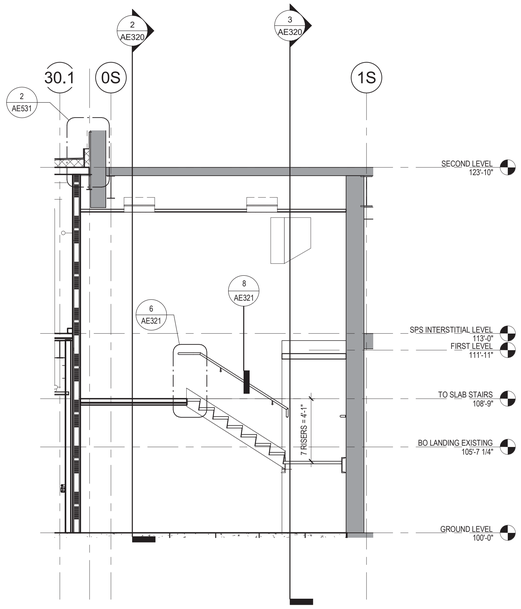

4 STAIR SECTION NORT-SOUTH @ CORRIDOR
1/4" = 1'-0"

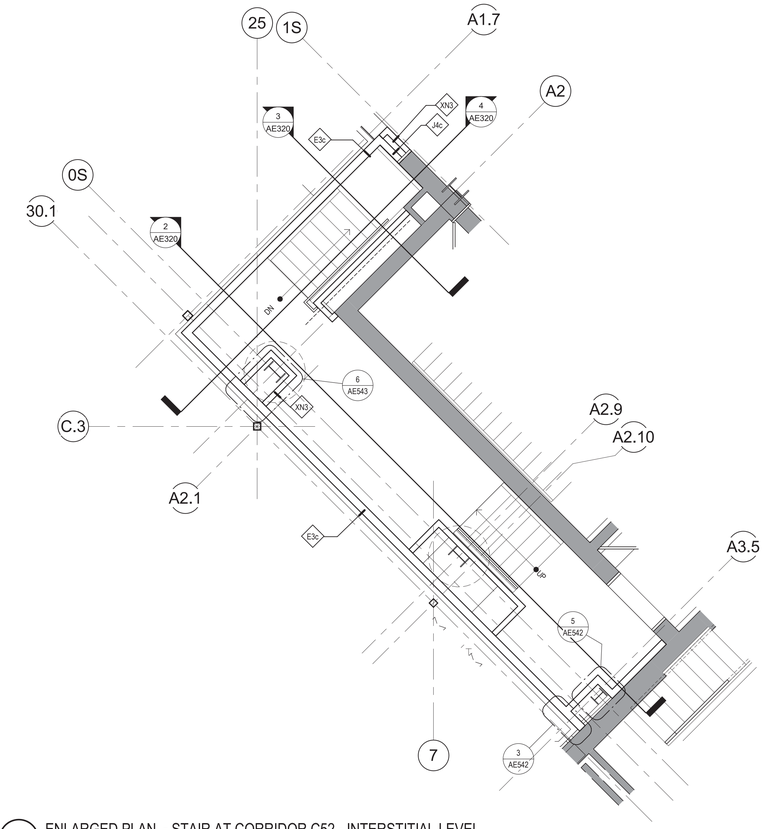

5 ENLARGED PLAN - STAIR AT CORRIDOR C52 - INTERSTITIAL LEVEL
1/4" = 1'-0"

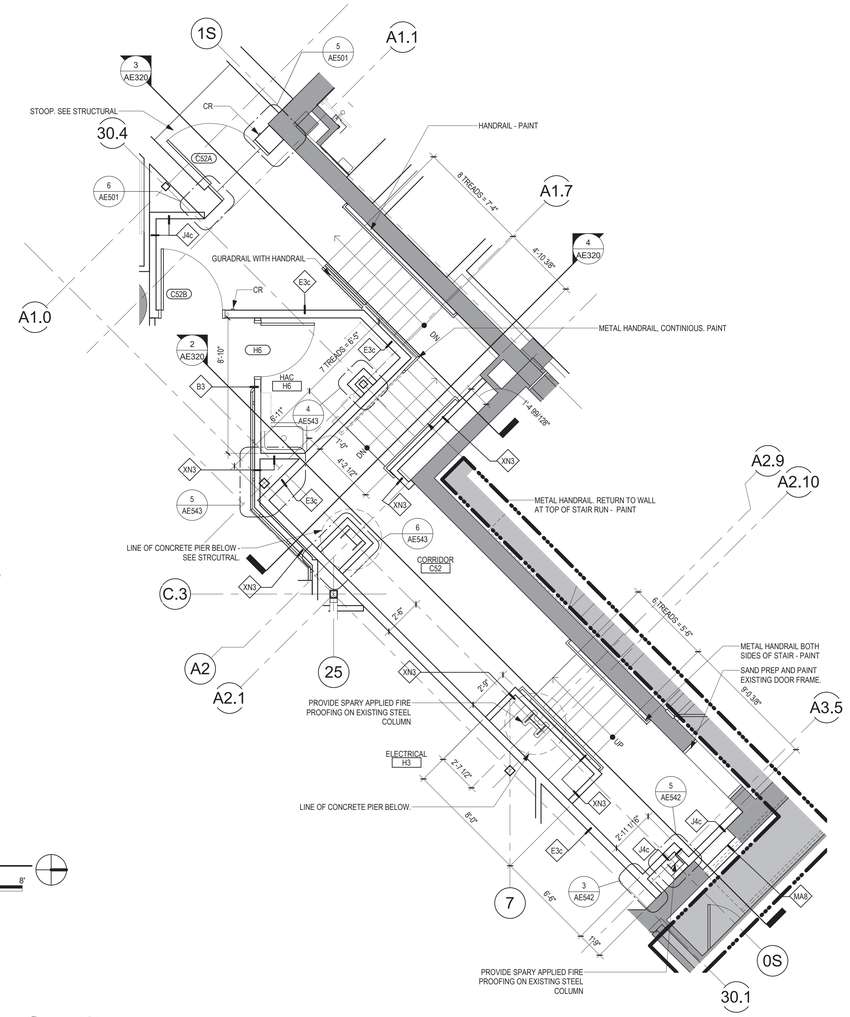

1 ENLARGED PLAN - STAIR AT CORRIDOR C52 - GROUND LEVEL
1/4" = 1'-0"

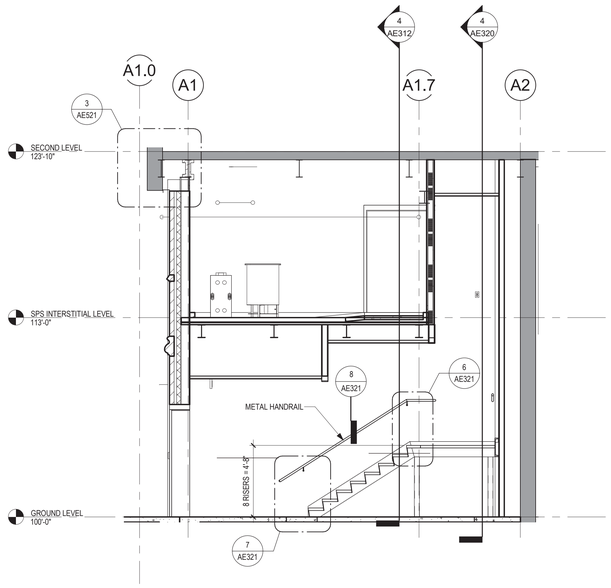

3 STAIR SECTION EAST-WEST @ ADDITION
1/4" = 1'-0"

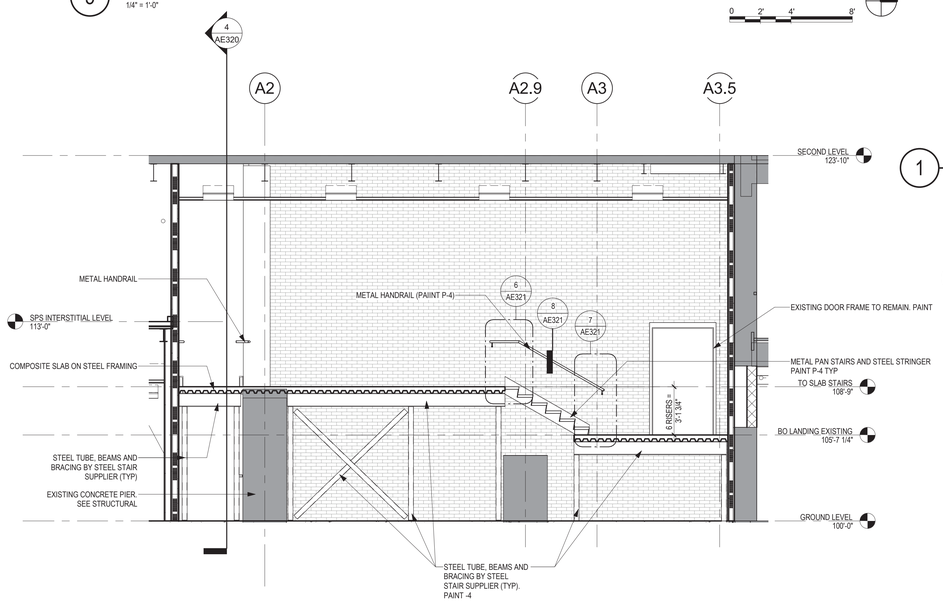

2 STAIR SECTION EAST-WEST @ EXISTING EXIT
1/4" = 1'-0"

Revisions:	Date:

CONSULTANT

IMEG

ARCHITECT/ENGINEER OF RECORD

ANDERSON

13605 1st Ave. N. #100 Plymouth, MN 55441
P 763.412.4000 | F 763.412.4090 | ae-mn.com
Anderson Engineering of Minnesota, LLC | Proj # 16584

STAMP

REGISTERED PROFESSIONAL ARCHITECT THOMAS A. OLESIAK SOUTH DAKOTA

DATE: 08/04/2022
License # 9335

Office of Construction and Facilities Management

VA U.S. Department of Veterans Affairs

Drawing Title: STAIR SECTIONS AND ENLARGED PLANS

Approved:

Phase: BID DOCUMENTS

FULLY SPRINKLERED

Project Title: CONSTRUCT NEW SPS

Location: Sioux Falls, SD.

Issue Date: 08/04/2022

Checked: Checker

Drawn: Author

Project Number: 438-460

Building Number: 5

Drawing Number: AE320

VA FORM 08 - 6231

7/7/2023 1:27:29 PM

C:\Users\Public\Documents\Revit Projects\16584-R21_gbarbell@ae-mn.com.rvt

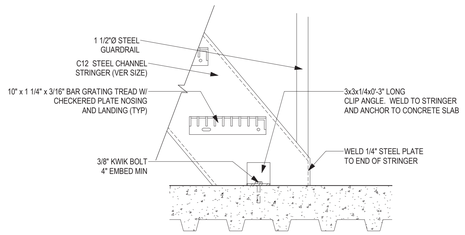

4 SECTION DETAIL - STAIR BOTTOM
1 1/2" = 1'-0"

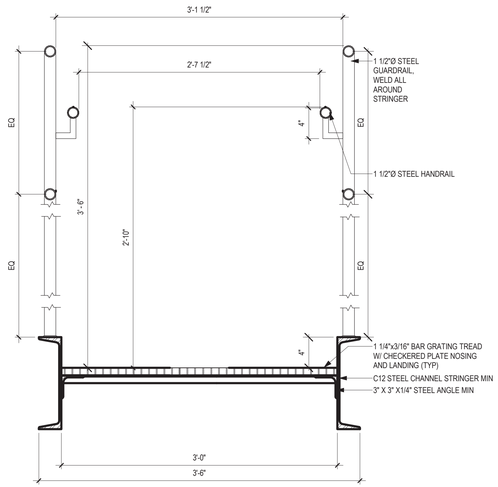

3 SECTION DETAIL - STAIR @ INTERSTITIAL
1 1/2" = 1'-0"

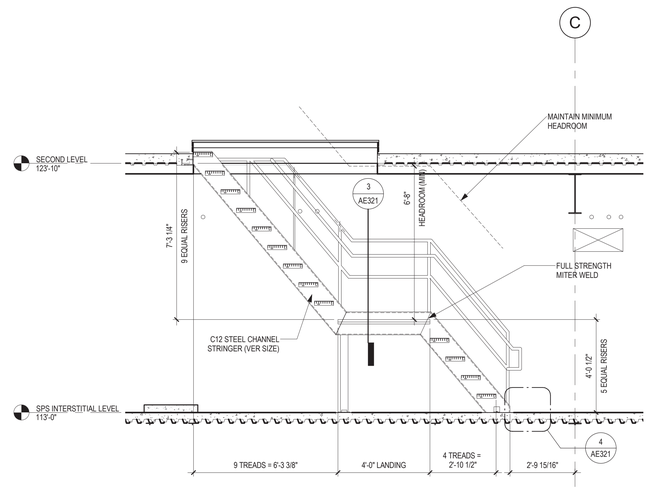

2 STAIR SECTION - INSTERSTITAL TO ROOF
3/8" = 1'-0"

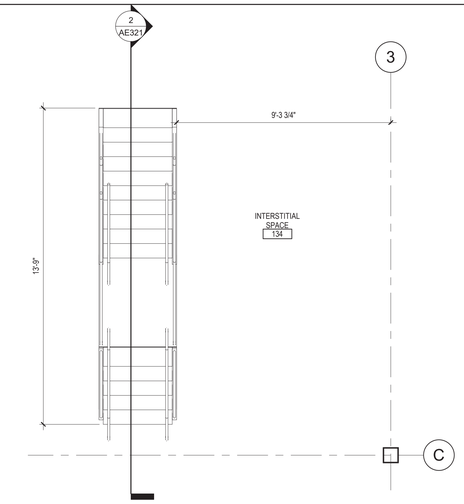

1 ENLARGED PLAN - STAIR TO ROOF AT INTERSTITIAL
3/8" = 1'-0"

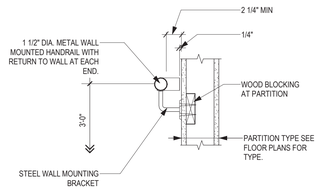

8 STAIR, WALL MOUNTED HANDRAIL SECTION
1 1/2" = 1'-0"

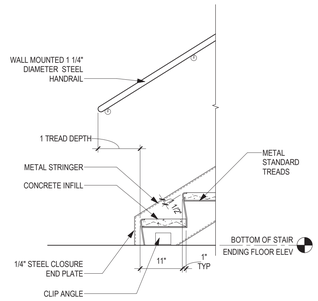

7 SECTION STAIR - METAL PAN STAIR AT BOTTOM OF STAIR TERMINATION
3/4" = 1'-0"

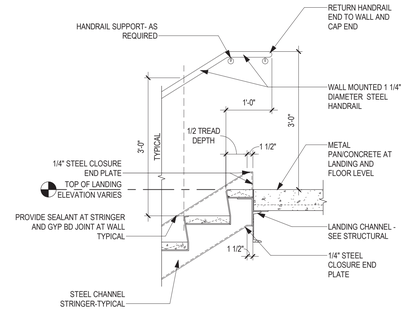

6 SECTION STAIR - HANDRAIL AT TOP OF STAIR RUN
3/4" = 1'-0"

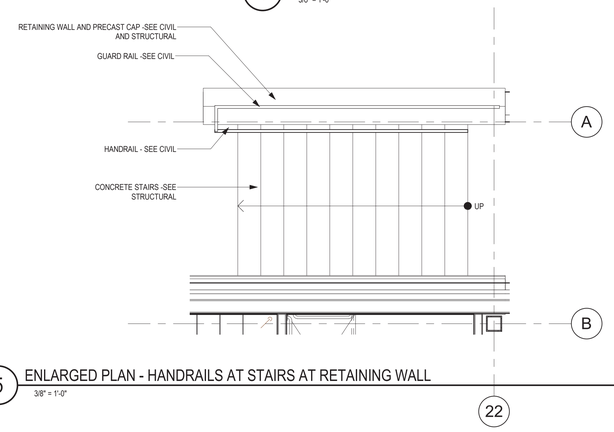

5 ENLARGED PLAN - HANDRAILS AT STAIRS AT RETAINING WALL
3/8" = 1'-0"

Revisions:	Date:

CONSULTANT

IMEG

ARCHITECT/ENGINEER OF RECORD

ANDERSON

13605 1st Ave. N. #100 Plymouth, MN 55441
P 763.412.4000 | F 763.412.4090 | ae-mn.com
Anderson Engineering of Minnesota, LLC | Proj # 16584

STAMP

REGISTERED PROFESSIONAL ENGINEER REG. NO. 9335 THOMAS A. OLESAK SOUTH DAKOTA

DATE: 08/04/2022
License # 9335

Office of Construction and Facilities Management

VA U.S. Department of Veterans Affairs

Drawing Title: STAIR SECTIONS AND ENLARGED PLANS

Approved:

Phase: BID DOCUMENTS

FULLY SPRINKLERED

Project Title: CONSTRUCT NEW SPS

Location: Sioux Falls, SD.

Issue Date: 08/04/2022

Checked: Checker

Drawn: Author

Project Number: 438-460

Building Number: 5

Drawing Number: AE321

VA FORM 08 - 6231

7/7/2023 1:27:32 PM

C:\Users\Public\Documents\Revit Projects\16584-R21_gbarbari@ae-mn.com.rvt

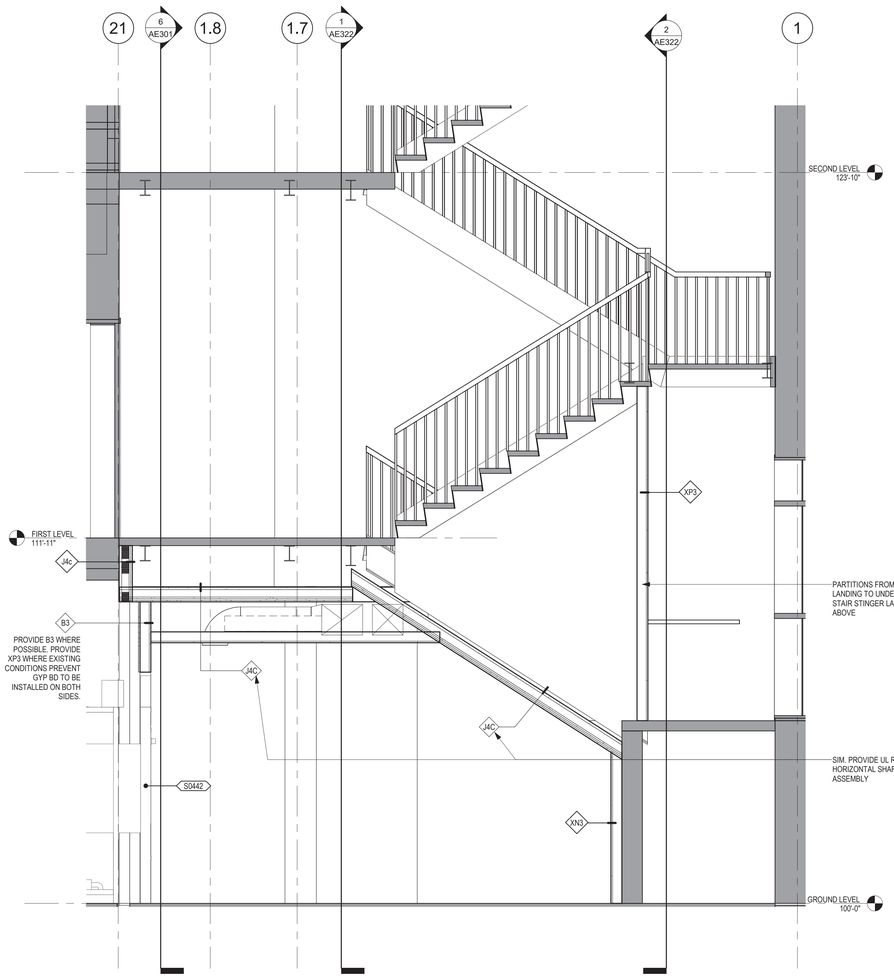

3 SECTION - PARTITIONS AT EXISTING STAIR - NORTH/SOUTH

1/2" = 1'-0"

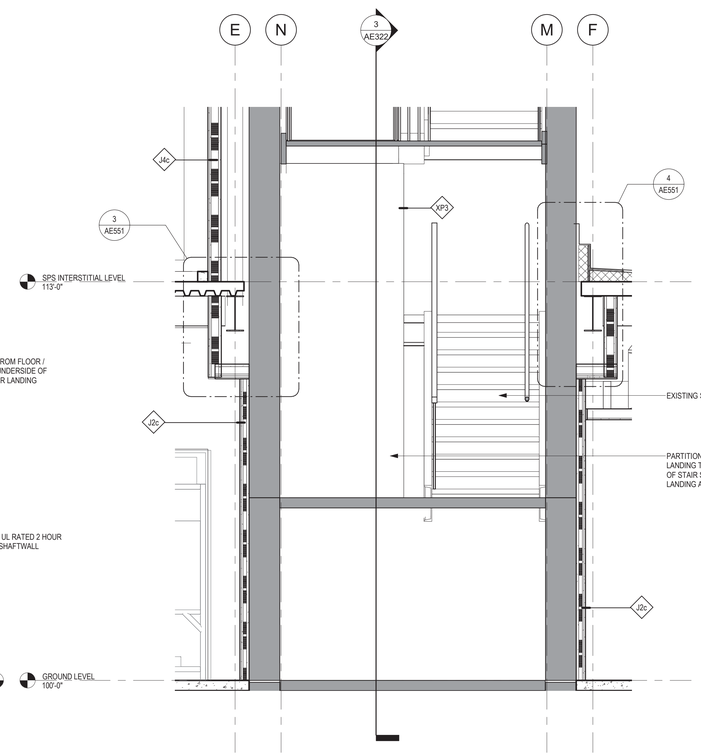

2 SECTION - PARTITIONS AT EXISTING STAIR - EAST/WEST

1/2" = 1'-0"

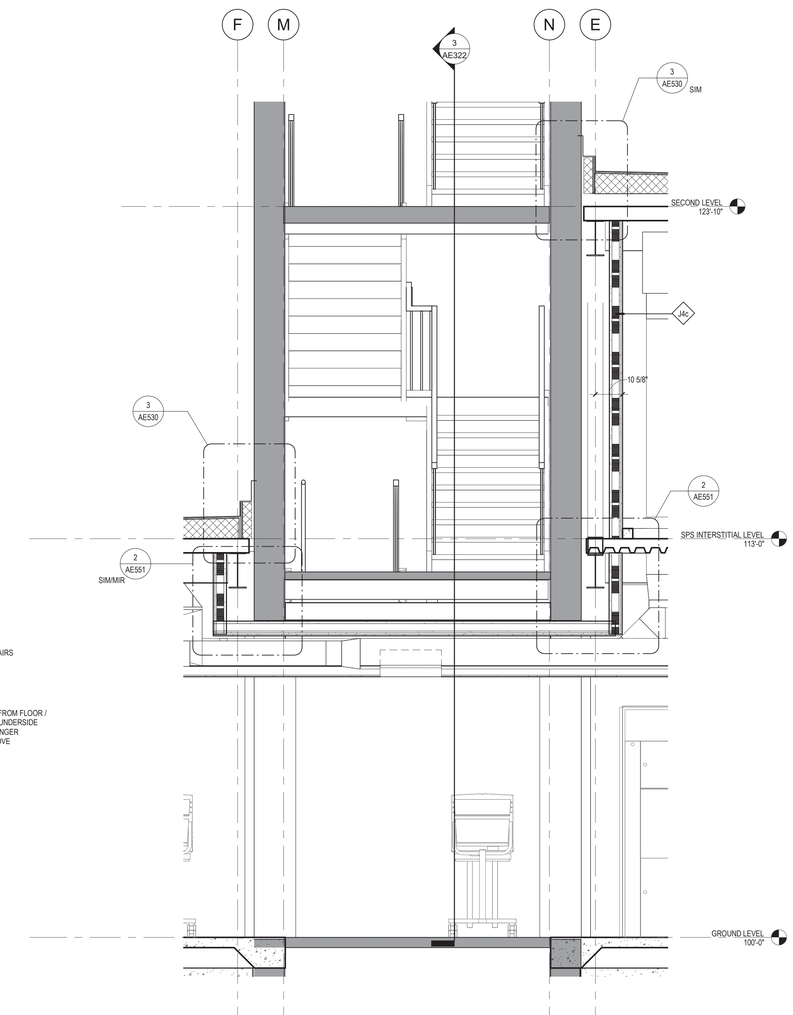

1 SECTION - PARTITIONS AT OPENING IN GROUND LEVEL - WEST/EAST

1/2" = 1'-0"

Revisions:	Date:

CONSULTANT

IMEG

ARCHITECT/ENGINEER OF RECORD

ANDERSON

13605 1st Ave. N. #100 Plymouth, MN 55441
P 763.412.4000 | F 763.412.4090 | ae-mn.com
Anderson Engineering of Minnesota, LLC | Proj # 16584

STAMP

REGISTERED PROFESSIONAL ENGINEER
STATE OF MINNESOTA
JOSHUA A. OLESAK
SOUTH DAKOTA
DATE: 08/04/2022
License # 9335

Office of Construction and Facilities Management

VA U.S. Department of Veterans Affairs

Drawing Title: STAIR SECTIONS - PARTITIONS AT EXISTING STAIR

Approved:

Phase: BID DOCUMENTS

FULLY SPRINKLERED

Project Title: CONSTRUCT NEW SPS

Location: Sioux Falls, SD.

Issue Date: 08/04/2022

Checked: Checker

Drawn: Author

Project Number: 438-460

Building Number: 5

Drawing Number: AE322

VA FORM 08 - 6231

7/7/2023 1:27:35 PM

C:\Users\Public\Documents\Revit Projects\16584-R21_jpoehlert@ae-mn.com.rvt

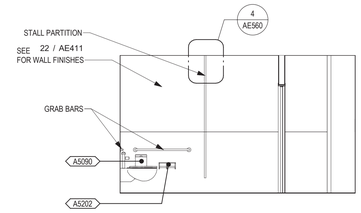

5 ELEVATION - WOMENS TOILET/LOCKER H13 - SOUTH
1/4" = 1'-0"

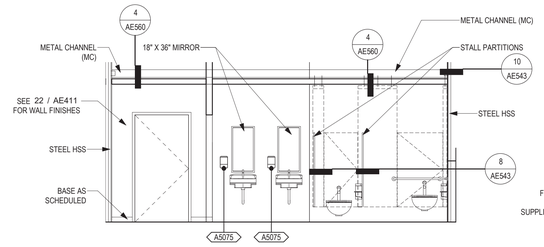

4 ELEVATION - WOMENS TOILET/LOCKER H13 - EAST
1/4" = 1'-0"

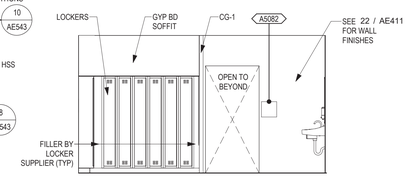

3 ELEVATION - WOMENS TOILET/LOCKER H13 - NORTH
1/4" = 1'-0"

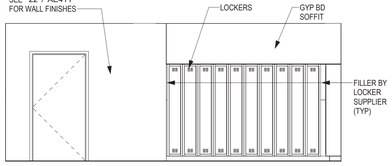

2 ELEVATION - WOMENS TOILET/LOCKER H13 - WEST
1/4" = 1'-0"

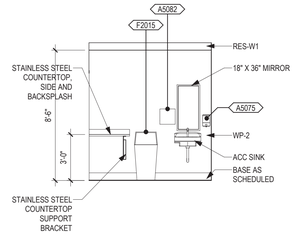

10 ELEVATION - ANTE-ROOM CLEAN H14 - SOUTH
1/4" = 1'-0"

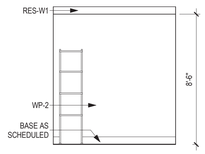

9 ELEVATION - CLEAN HAC H16 - NORTH
1/4" = 1'-0"

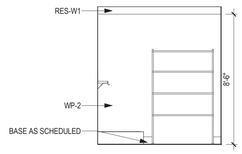

8 ELEVATION - CLEAN HACH16 - WEST
1/4" = 1'-0"

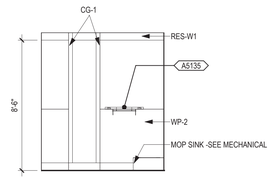

7 ELEVATION - CLEAN HAC H16 - SOUTH
1/4" = 1'-0"

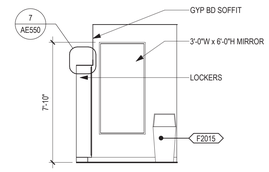

6 ELEVATION - WOMENS TOILET/LOCKER H13 - PARTIAL SOUTH
1/4" = 1'-0"

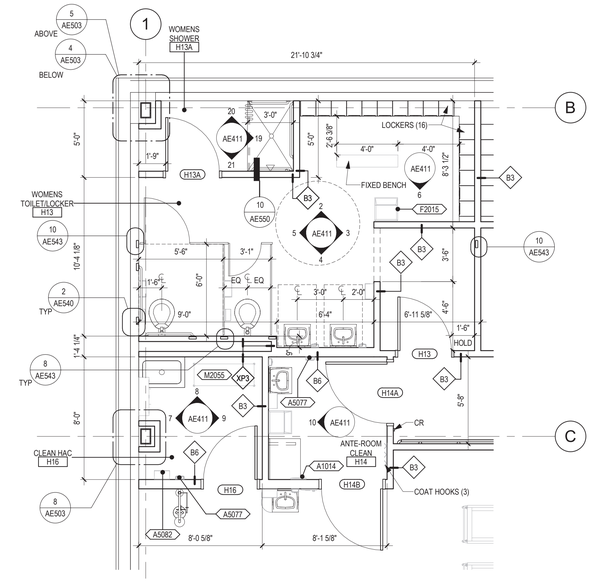

1 ENLARGED PLAN - WOMENS TOILET/LOCKER H13, HAC H16 & ANTE H14
1/4" = 1'-0"

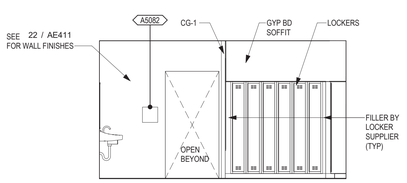

15 ELEVATION - MENS TOILET/LOCKER H12 - SOUTH
1/4" = 1'-0"

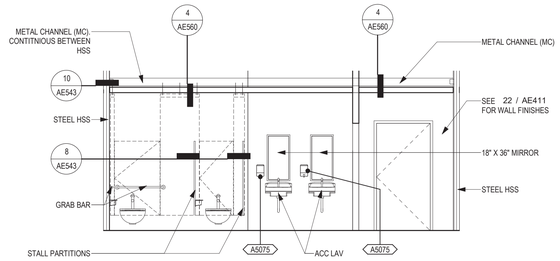

14 ELEVATION - MENS TOILET/LOCKER H12 - EAST
1/4" = 1'-0"

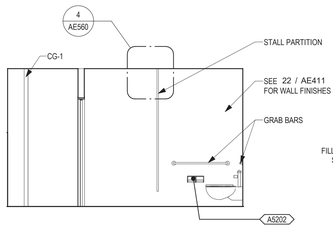

13 ELEVATION - MENS TOILET/LOCKER H12 - NORTH
1/4" = 1'-0"

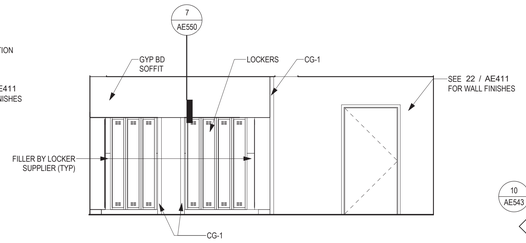

12 ELEVATION - MENS TOILET/LOCKER H12 - WEST
1/4" = 1'-0"

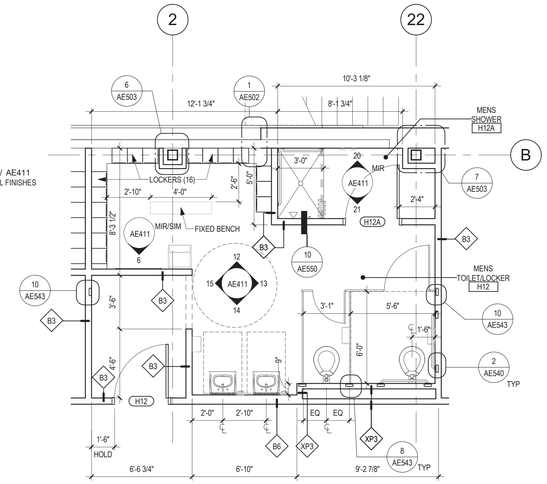

11 ENLARGED PLAN - MENS TOILET/LOCKER H12
1/4" = 1'-0"

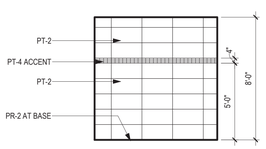

22 TYPICAL TILE PATTERN
1/4" = 1'-0"

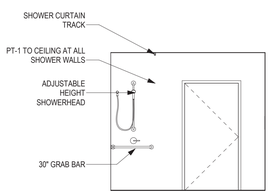

21 ELEVATION - SHOWER - EAST (TYP)
1/4" = 1'-0"

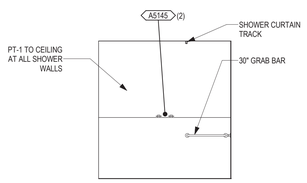

20 ELEVATION - SHOWER -WEST (TYP)
1/4" = 1'-0"

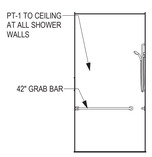

19 ELEVATION - SHOWER -NORTH (TYP)
1/4" = 1'-0"

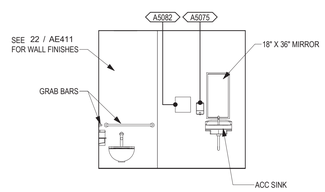

18 ELEVATION - TOILET H7 - EAST
1/4" = 1'-0"

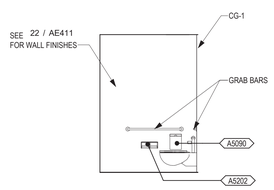

17 ELEVATION - TOILET H7 - NORTH
1/4" = 1'-0"

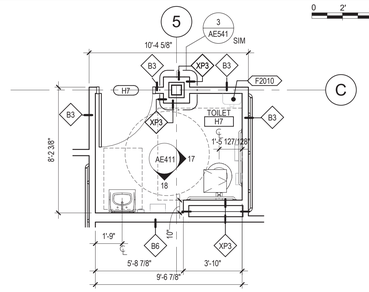

16 ENLARGED PLAN - TOILET H7
1/4" = 1'-0"

Revisions:	Date:

CONSULTANT

IMEG

ARCHITECT/ENGINEER OF RECORD

ANDERSON

13605 1st Ave. N. #100 Plymouth, MN 55441
P 763.412.4000 | F 763.412.4090 | ae-mn.com
Anderson Engineering of Minnesota, LLC | Proj # 16584

STAMP

REGISTERED PROFESSIONAL ENGINEER — THOMAS A. OLESIAK — SOUTH DAKOTA

DATE: 08/04/2022
License # 9335

Office of Construction and Facilities Management

VA U.S. Department of Veterans Affairs

Drawing Title: ENLARGED PLANS & INTERIOR ELEVATIONS

Approved:

Phase: BID DOCUMENTS

FULLY SPRINKLERED

Project Title: CONSTRUCT NEW SPS

Location: Sioux Falls, SD.

Issue Date: 08/04/2022 | Checked: Checker | Drawn: Author

Project Number: 438-460

Building Number: 5

Drawing Number: AE411

VA FORM 08 - 6231

7/7/2023 1:27:42 PM

C:\Users\PublicDocuments\Revit Projects\16584-R21_jpaxtonl@ae-mn.com.rvt

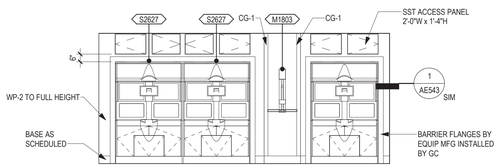

4 INTERIOR ELEVATION - SCOPE PROCESSING DECONTAMINATION ROOM H26 - EAST
1/4" = 1'-0"

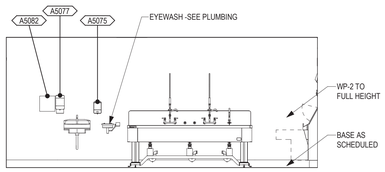

3 INTERIOR ELEVATION - SCOPE PROCESSING DECONTAMINATION ROOM H26 - NORTH
1/4" = 1'-0"

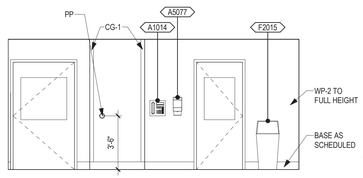

2 INTERIOR ELEVATION - SCOPE PROCESSING DECONTAMINATION ROOM H26 - WEST
1/4" = 1'-0"

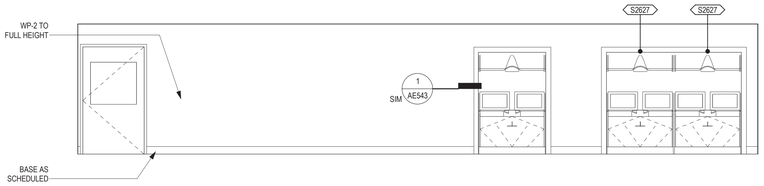

6 INTERIOR ELEVATION - SCOPE STAGING ROOM H17A - WEST
1/4" = 1'-0"

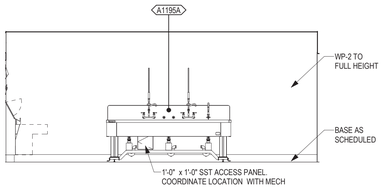

5 INTERIOR ELEVATION - SCOPE PROCESSING DECONTAMINATION ROOM H26 - SOUTH
1/4" = 1'-0"

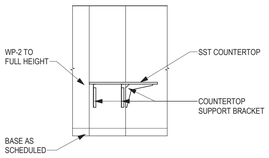

8 INTERIOR ELEVATION - SCOPE PROCESSING DECONTAMINATION ROOM H26 - AT COLUMN - SOUTH
1/4" = 1'-0"

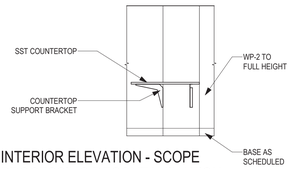

7 INTERIOR ELEVATION - SCOPE PROCESSING DECONTAMINATION ROOM H26 - AT COLUMN - EAST
1/4" = 1'-0"

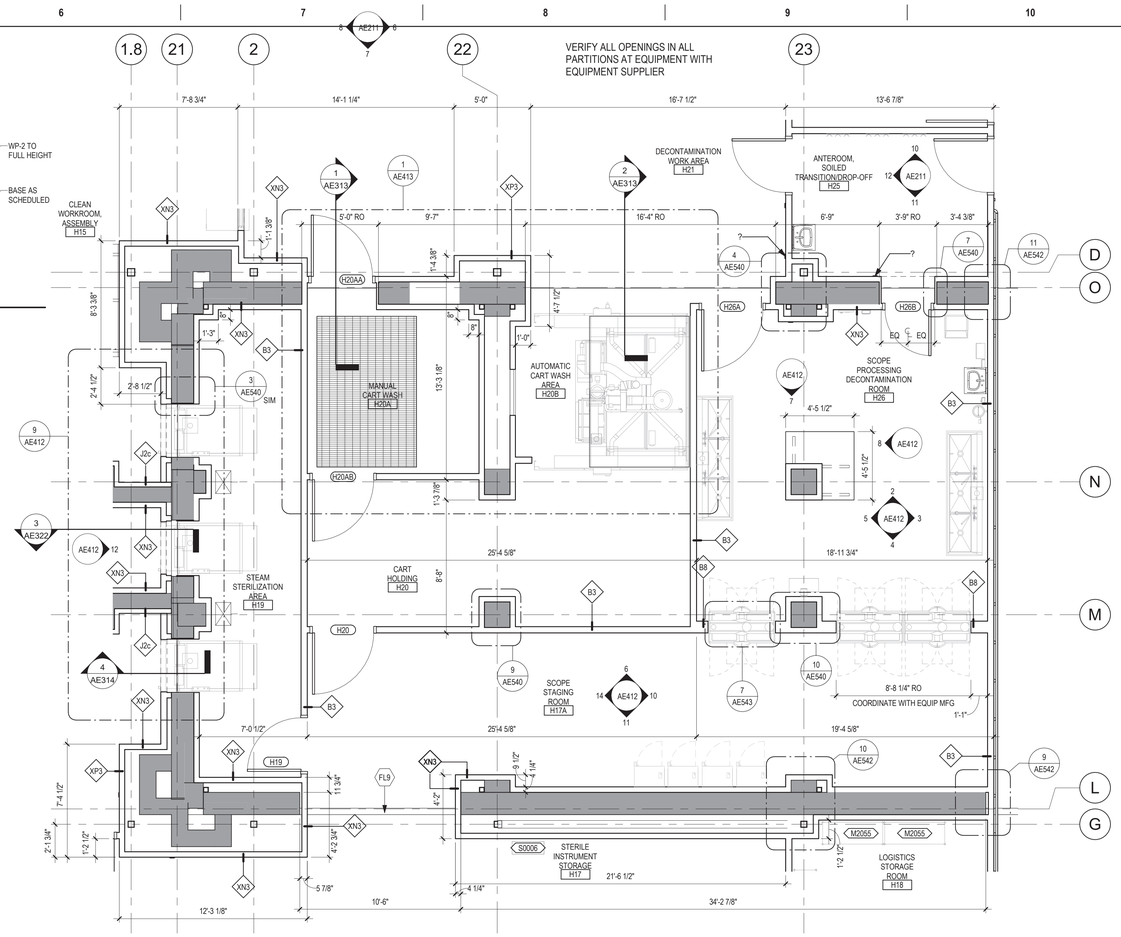

1 GROUND LEVEL - ENLARGED PLAN @ STERILIZERS, SCOPE PROCESSING AND CART WASH
1/4" = 1'-0"

11 INTERIOR ELEVATION - SCOPE STAGING ROOM H17A - EAST
1/4" = 1'-0"

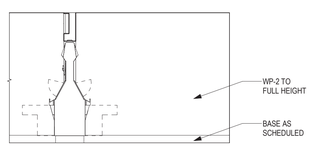

10 INTERIOR ELEVATION - SCOPE STAGING ROOM H17A - NORTH
1/4" = 1'-0"

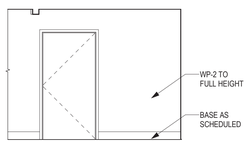

14 INTERIOR ELEVATION - SCOPE STAGING ROOM H17A - SOUTH
1/4" = 1'-0"

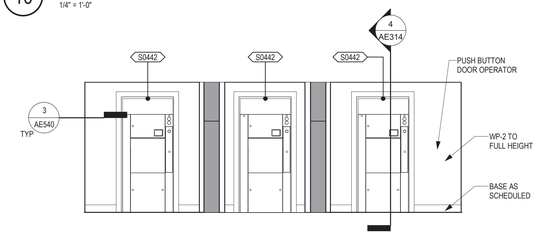

12 INTERIOR ELEVATION - CLEAN WORKROOM ASSEMBLY H17 - EAST
1/4" = 1'-0"

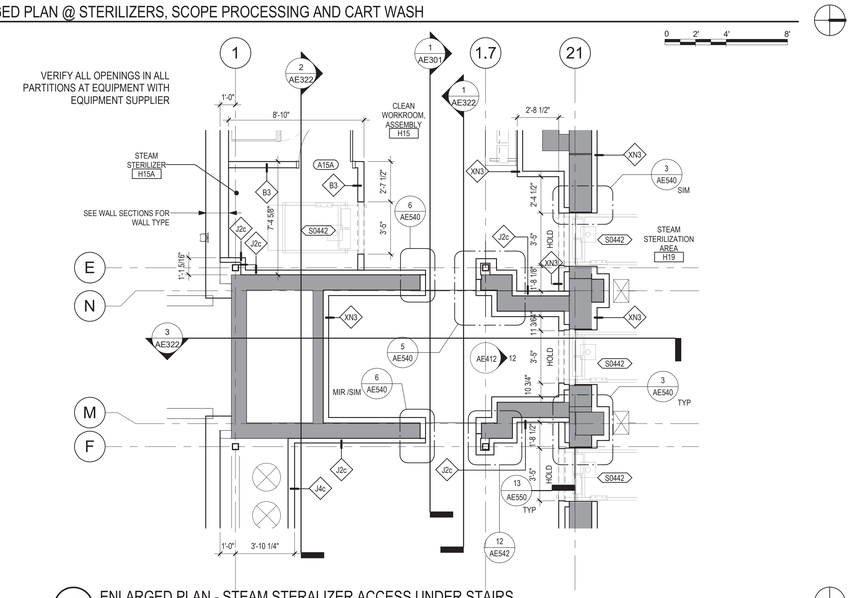

9 ENLARGED PLAN - STEAM STERALIZER ACCESS UNDER STAIRS
1/4" = 1'-0"

Revisions:	Date:

CONSULTANT

IMEG

ARCHITECT/ENGINEER OF RECORD

ANDERSON

13605 1st Ave. N. #100 Plymouth, MN 55441
P 763.412.4000 | F 763.412.4090 | ae-mn.com
Anderson Engineering of Minnesota, LLC | Proj # 16584

STAMP

DATE: 08/04/2022
License # 9335

Office of Construction and Facilities Management

VA U.S. Department of Veterans Affairs

Drawing Title: ENLARGED PLANS & INTERIOR ELEVATIONS

Approved:

Phase: BID DOCUMENTS

FULLY SPRINKLERED

Project Title: CONSTRUCT NEW SPS

Project Number: 438-460

Building Number: 5

Location: Sioux Falls, SD.

Issue Date: 08/04/2022

Checked: Checker

Drawn: Author

Drawing Number: AE412

VA FORM 08 - 6231

7/7/2023 1:27:49 PM

C:\Users\Public\Documents\Revit Projects\16584-R21_gbartlett@ae-mn.com.rvt

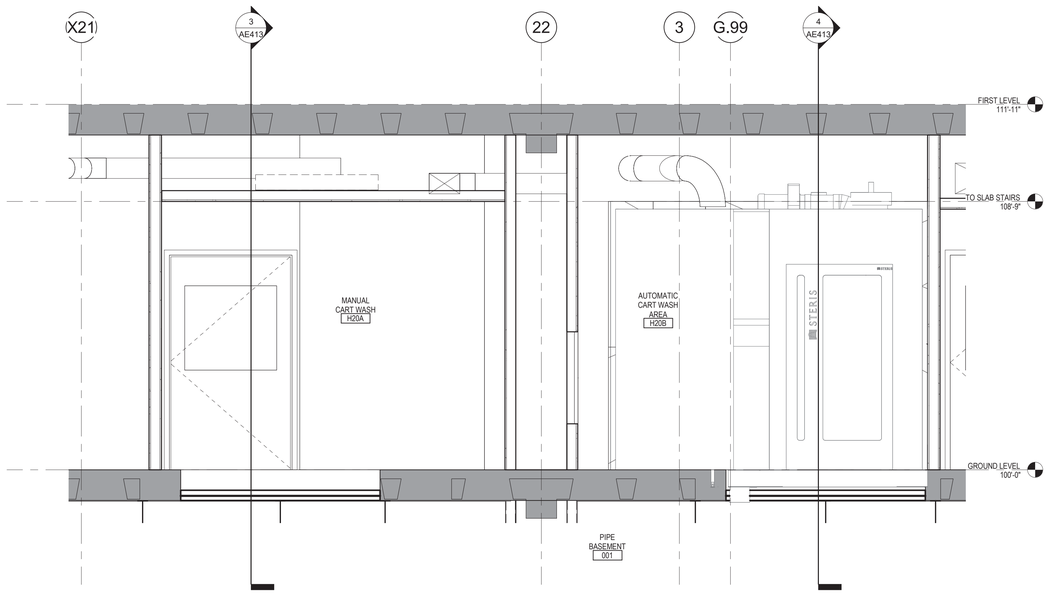

2 INTERIOR SECTION - AUTOMATIC CART WASH A20B & MANUAL CART WASH H20A - NORTH/SOUTH
1/2" = 1'-0"

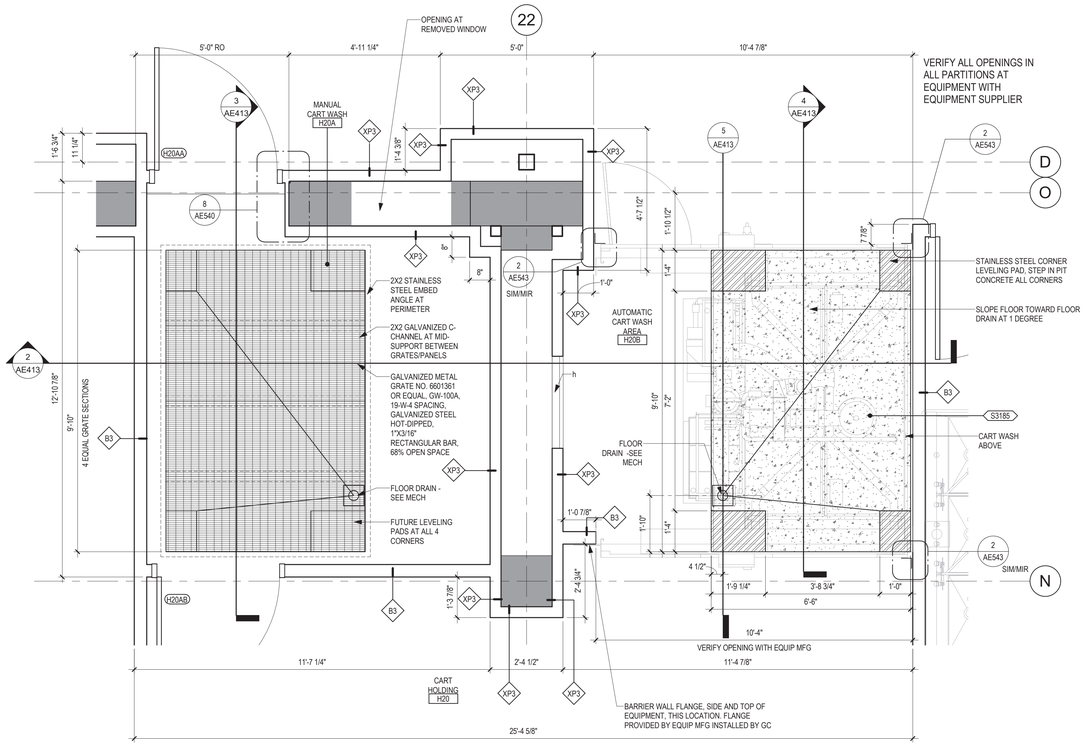

1 ENLARGED PLAN - AUTOMATIC CART WASH A20B & MANUAL CART WASH H20A
1/2" = 1'-0"

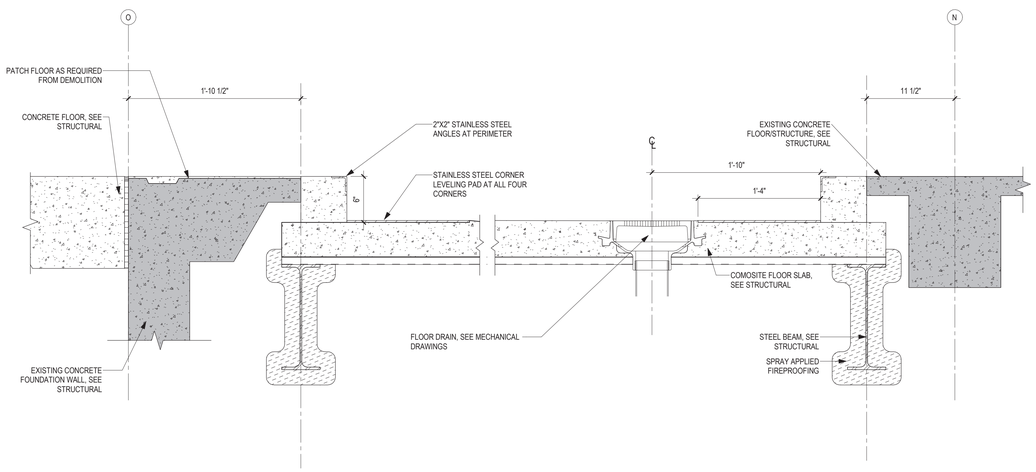

5 DEPRESSED SLAB DETAIL
1 1/2" = 1'-0"

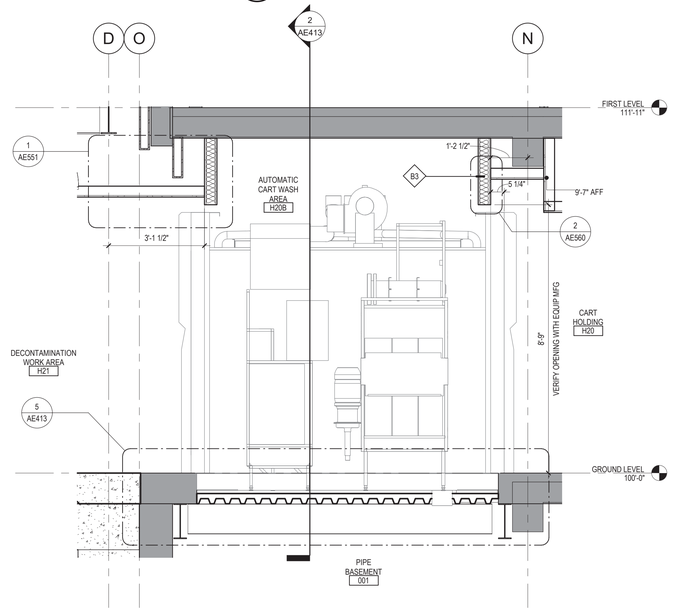

4 SECTION AT AUTOMATIC CART WASH H20B - EAST/WEST
1/2" = 1'-0"

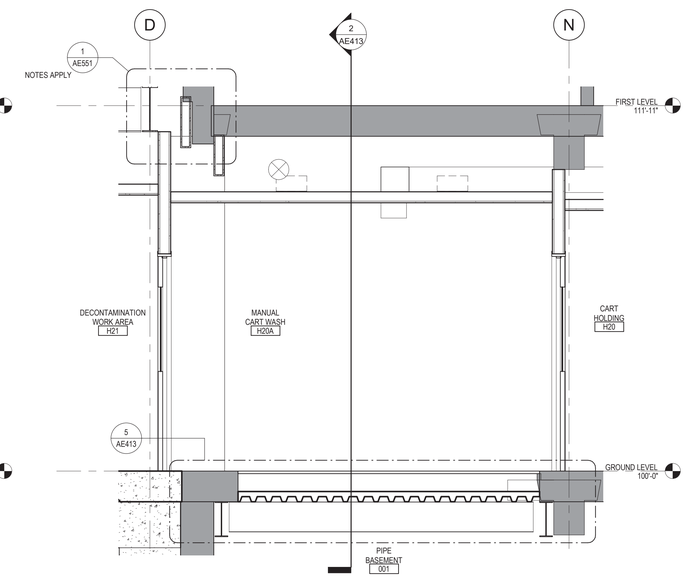

3 SECTION AT MANUAL CART WASH H20A - EAST/WEST
1/2" = 1'-0"

Revisions:	Date:

CONSULTANT

IMEG

ARCHITECT/ENGINEER OF RECORD

ANDERSON

13605 1st Ave. N. #100 Plymouth, MN 55441
P 763.412.4000 | F 763.412.4090 | ae-mn.com
Anderson Engineering of Minnesota, LLC | Proj # 16584

STAMP

DATE: 08/04/2022
License # 9335

Office of Construction and Facilities Management

VA U.S. Department of Veterans Affairs

Drawing Title: ENLARGED PLAN, SECTIONS AND DETAILS - CART WASH

Approved:

Phase: BID DOCUMENTS

FULLY SPRINKLERED

Project Title: CONSTRUCT NEW SPS

Location: Sioux Falls, SD.

Issue Date: 08/04/2022 | Checked: Checker | Drawn: Author

Project Number: 438-460

Building Number: 5

Drawing Number: AE413

VA FORM 08 - 6231

7/7/2023 1:27:54 PM

C:\Users\Public\Documents\Revit Projects\16584-R21_jpoehsel@ae-mn.com.rvt

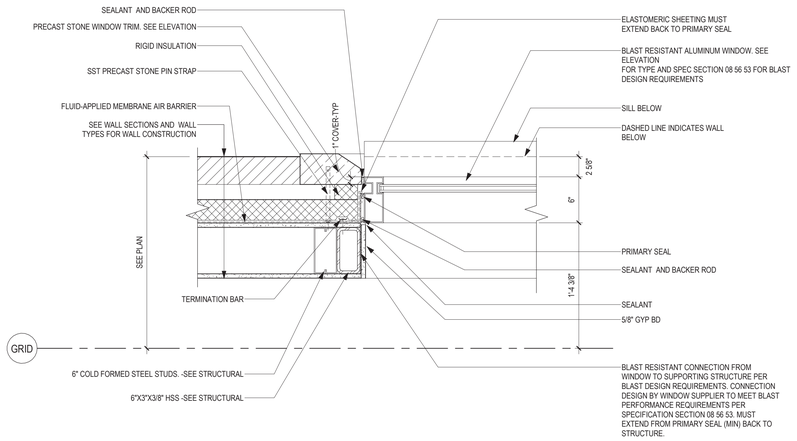

4 PLAN DETAIL - WINDOW JAMB @ BRICK
1 1/2" = 1'-0"

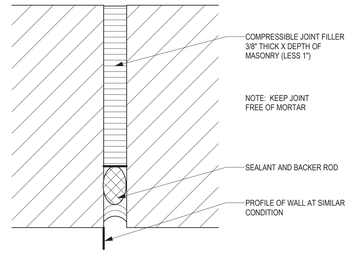

3 BRICK VERTICAL EXPANSION/CONTROL JOINT
1 : 1

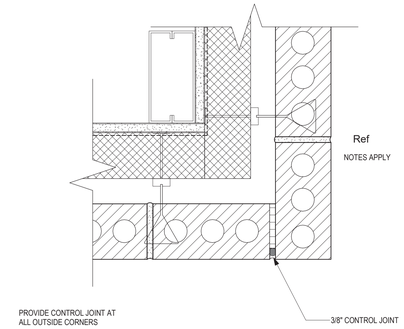

2 PLAN DETAIL - FACE BRICK OUTSIDE CORNERS WITH CONTROL JOINT
3" = 1'-0"

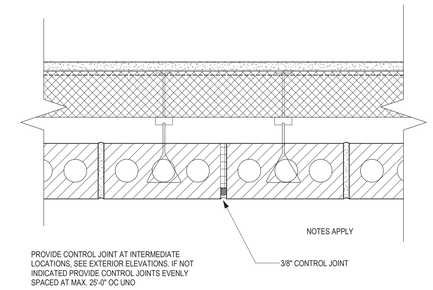

1 PLAN DETAIL - BRICK CONTROL JOINT (TYP)
3" = 1'-0"

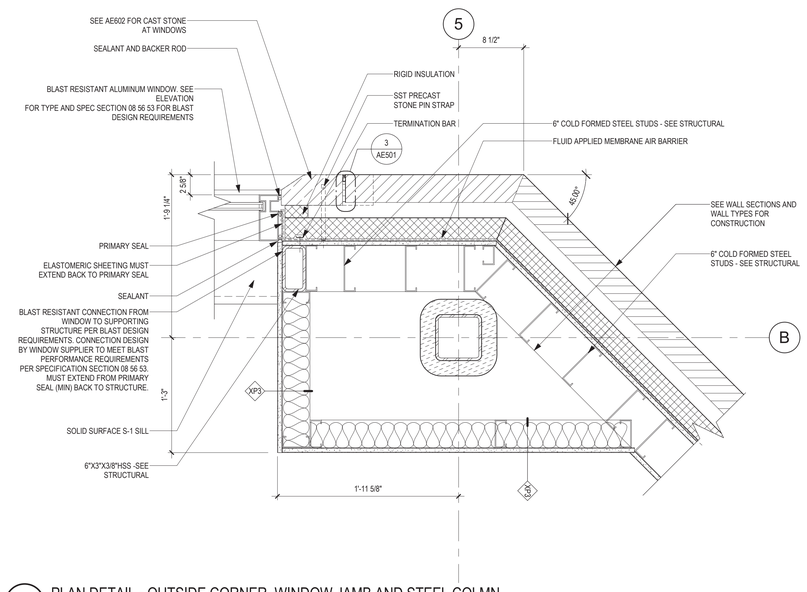

7 PLAN DETAIL - OUTSIDE CORNER, WINDOW JAMB AND STEEL COLMN
1 1/2" = 1'-0"

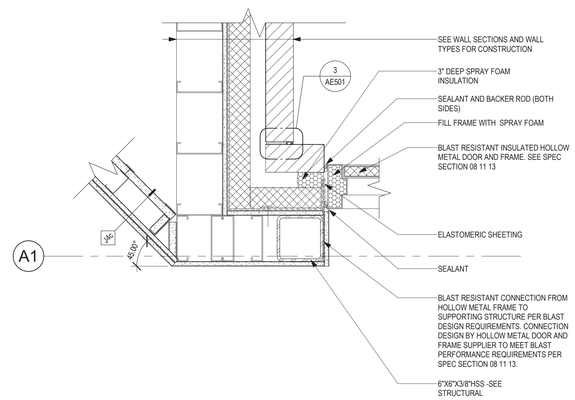

6 PLAN DETAIL - INSIDE CORNER AND DOOR JAMB
1 1/2" = 1'-0"

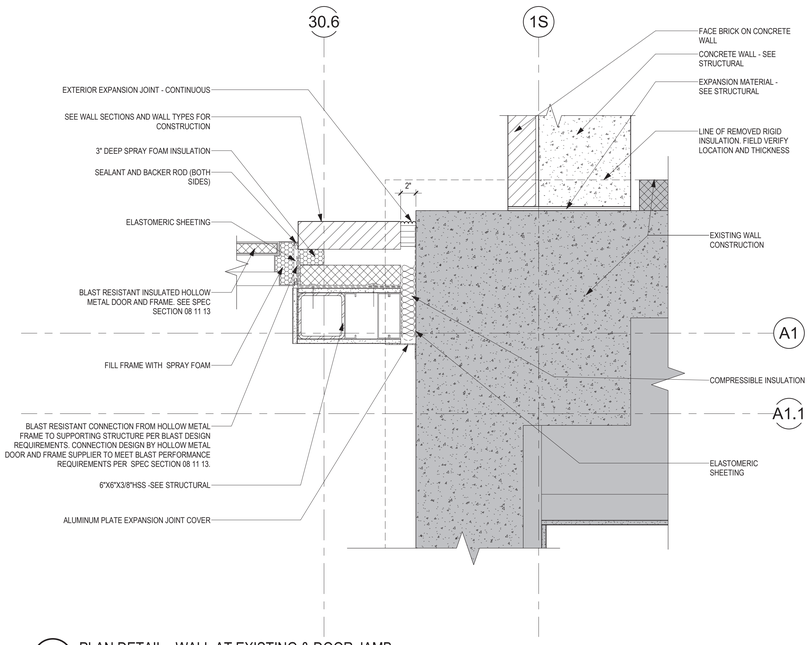

5 PLAN DETAIL - WALL AT EXISTING & DOOR JAMB
1 1/2" = 1'-0"

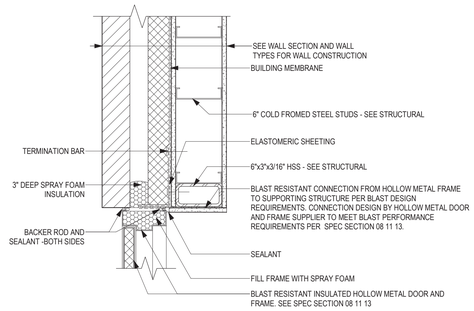

8 PLAN DETAIL - HM FRAME JAMB AT METAL STUD BACK UP AND FACEBRICK
1 1/2" = 1'-0"

Revisions:	Date:

CONSULTANT

IMEG

ARCHITECT/ENGINEER OF RECORD

ANDERSON

13605 1st Ave. N. #100 Plymouth, MN 55441
P 763.412.4000 | F 763.412.4090 | ae-mn.com
Anderson Engineering of Minnesota, LLC | Proj # 16584

STAMP

REGISTERED PROFESSIONAL ARCHITECT
REG. NO. 9335
THOMAS A. OLESAK
SOUTH DAKOTA
DATE: 08/04/2022
License # 9335

Office of Construction and Facilities Management

VA U.S. Department of Veterans Affairs

Drawing Title: EXTERIOR PLAN DETAILS

Approved:

Phase: BID DOCUMENTS

FULLY SPRINKLERED

Project Title: CONSTRUCT NEW SPS

Location: Sioux Falls, SD.

Issue Date: 08/04/2022

Checked: Checker

Drawn: Author

Project Number: 438-460

Building Number: 5

Drawing Number: AE501

VA FORM 08 - 6231

7/7/2023 1:27:57 PM

C:\Users\Public\Documents\Revit Projects\16584-R21_gbatbat@ae-mn.com.rvt

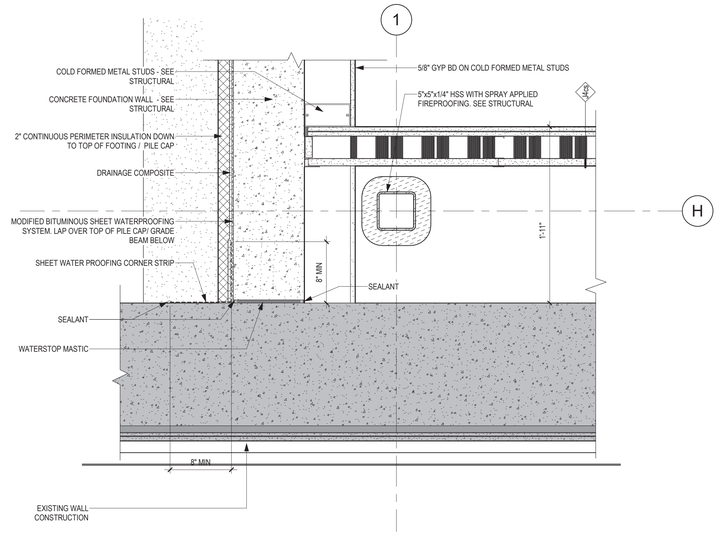

3 PLAN DETAIL - CAST IN PLACE CONCRETE TO EXTING OR EXTERIOR WALL
1 1/2" = 1'-0"

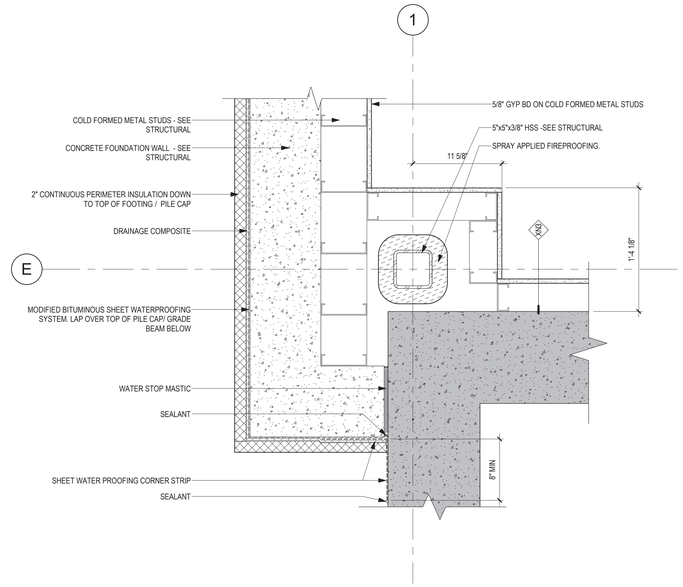

2 PLAN DETAIL - CAST IN PLACE CONCRETE FOUNDATION TO EXSTING STAIR TOWER
1 1/2" = 1'-0"

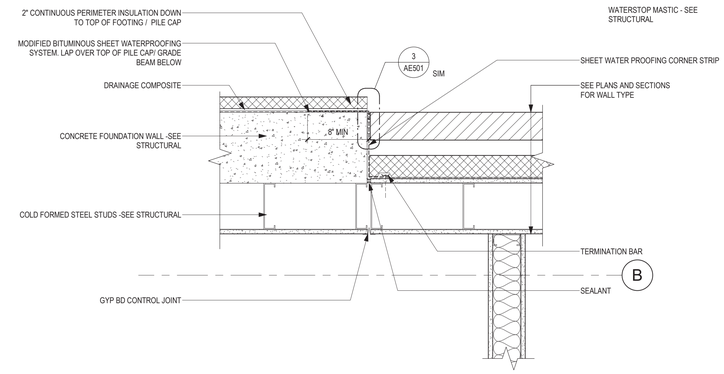

1 PLAN DETAIL - BRICK AND STEEL STUD TO CAST IN PLACE CONCRETE TRANSITION
1 1/2" = 1'-0"

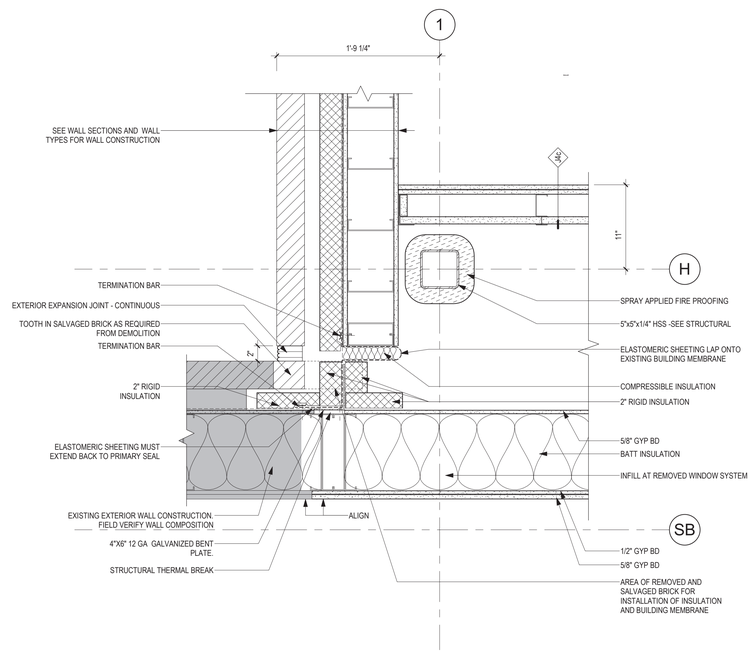

6 PLAN DETAIL -BRICK AND STEEL STUDS TO EXTING 'OPERATING SUITE' EXTERIOR WALL
1 1/2" = 1'-0"

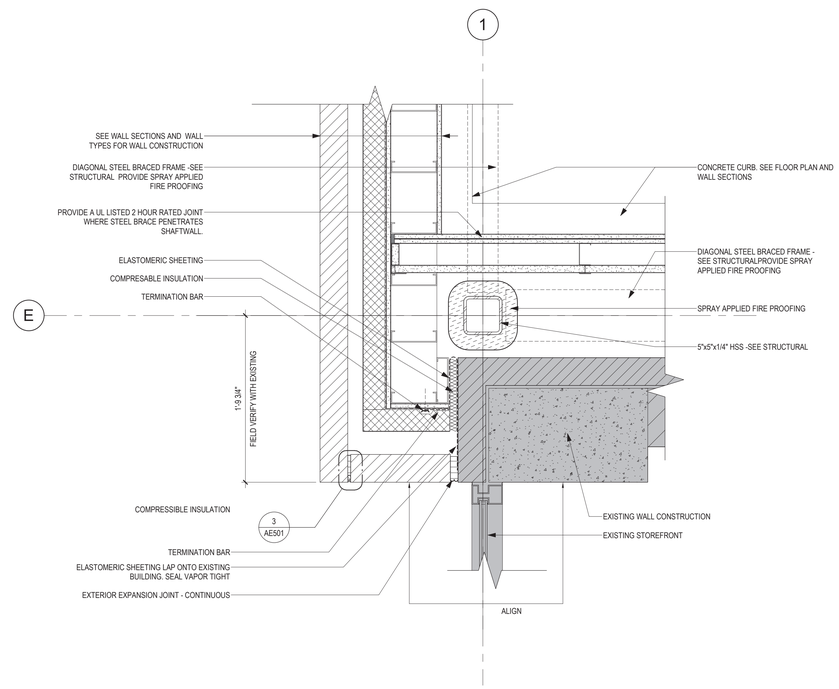

5 PLAN DETAIL - BRICK AND STEEL STUD AT EXISTING STAIR TOWER - INTERSTITIAL 134
1 1/2" = 1'-0"

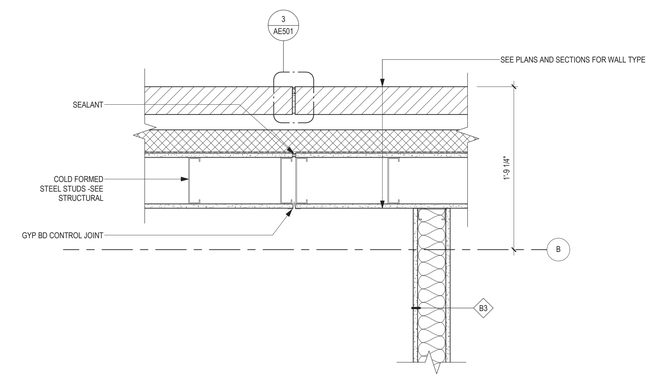

4 PLAN DETAIL - BRICK AND STEEL STUD ABOVE CAST IN PLACE CONCRETE TRANSITION
1 1/2" = 1'-0"

Revisions:	Date:

CONSULTANT

IMEG

ARCHITECT/ENGINEER OF RECORD

ANDERSON

13605 1st Ave. N. #100 Plymouth, MN 55441
P 763.412.4000 | F 763.412.4090 | ae-mn.com
Anderson Engineering of Minnesota, LLC | Proj # 16584

STAMP

REGISTERED PROFESSIONAL ENGINEER ARCHITECT
REGISTERED PROFESSIONAL ENGINEER
THOMAS A. OLESIAK
SOUTH DAKOTA

DATE: 08/04/2022
License # 9335

Office of Construction and Facilities Management

VA U.S. Department of Veterans Affairs

Drawing Title: EXTERIOR PLAN DETAILS

Approved:

Phase: BID DOCUMENTS

FULLY SPRINKLERED

Project Title: CONSTRUCT NEW SPS

Location: Sioux Falls, SD.

Issue Date: 08/04/2022

Checked: Checker

Drawn: Author

Project Number: 438-460

Building Number: 5

Drawing Number: AE502

VA FORM 08 - 6231

7/7/2023 1:28:09 PM

C:\Users\Public\Documents\Revit Projects\16584-R21_jbarbel@ae-mn.com.rvt

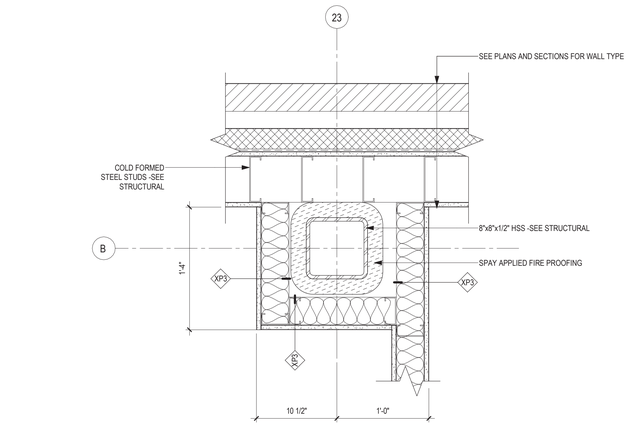

3 PLAN DETAIL - EXERIOR WALL AT COLUMN B-23 - OFFICE H10
1 1/2" = 1'-0"

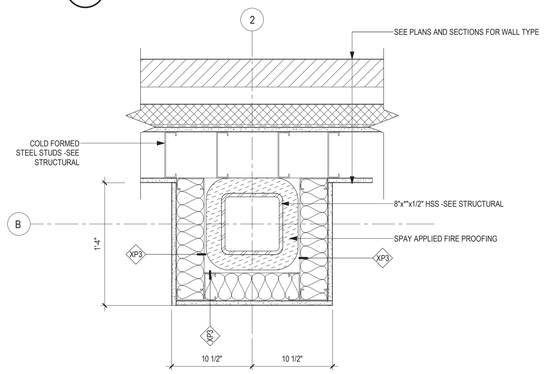

6 PLAN DETAIL - EXERIOR WALL AT COLUMN B-2
1 1/2" = 1'-0"

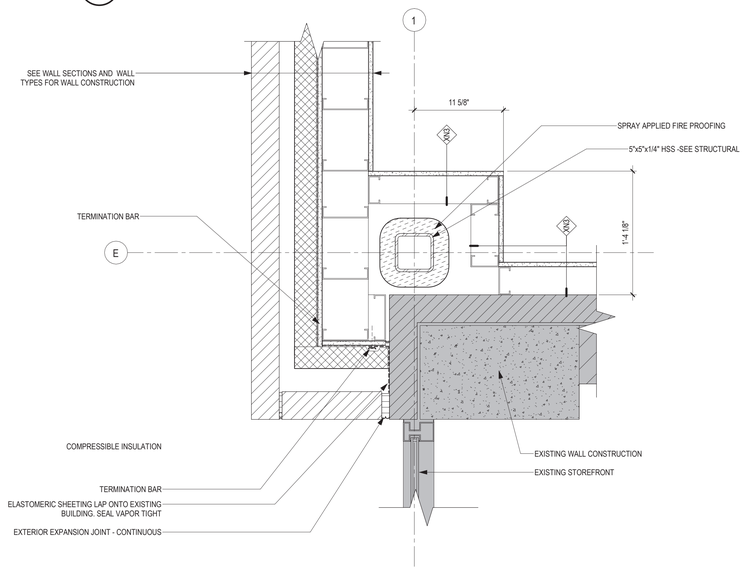

9 PLAN DETAIL - BRICK AND STEEL STUD @ EXISTING STAIR TOWER - CLEAN WORKROOM, ASSEMBLY H15
1 1/2" = 1'-0"

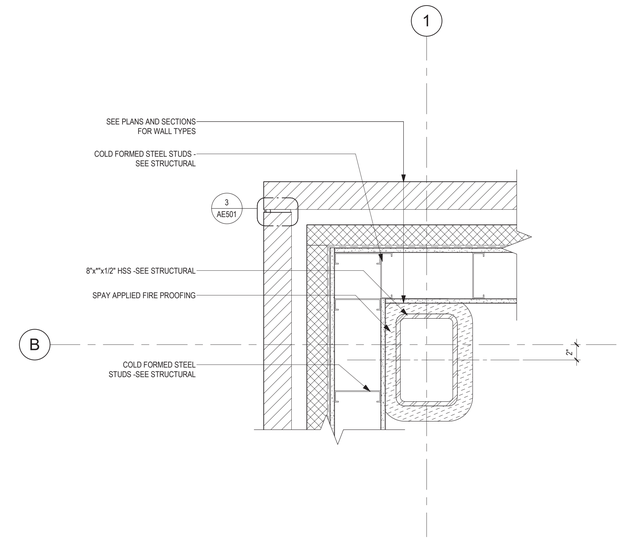

2 PLAN DETAIL - BRICK AND STEEL STUD @ COLUMN B-1 - INTERSTITIAL 134
1 1/2" = 1'-0"

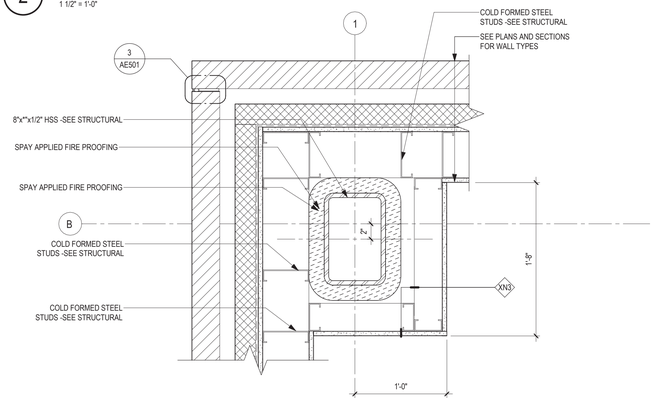

5 PLAN DETAIL - BRICK AND STEEL STUD @ COLUMN B-1 (ABOVE GRADE) - WOMENS SHOWER H13A
1 1/2" = 1'-0"

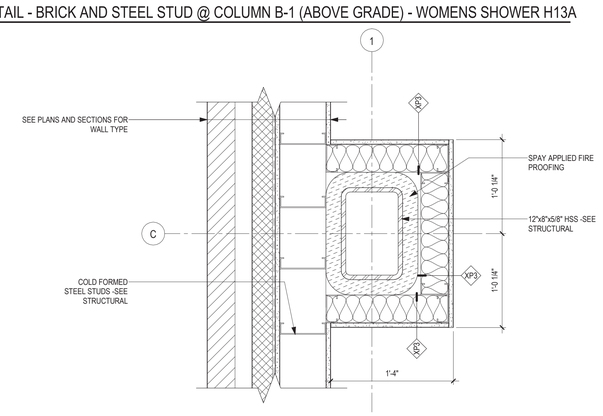

8 PLAN DETAIL - EXERIOR WALL AT COLUMN C-1 - CLEAN HAC H16
1 1/2" = 1'-0"

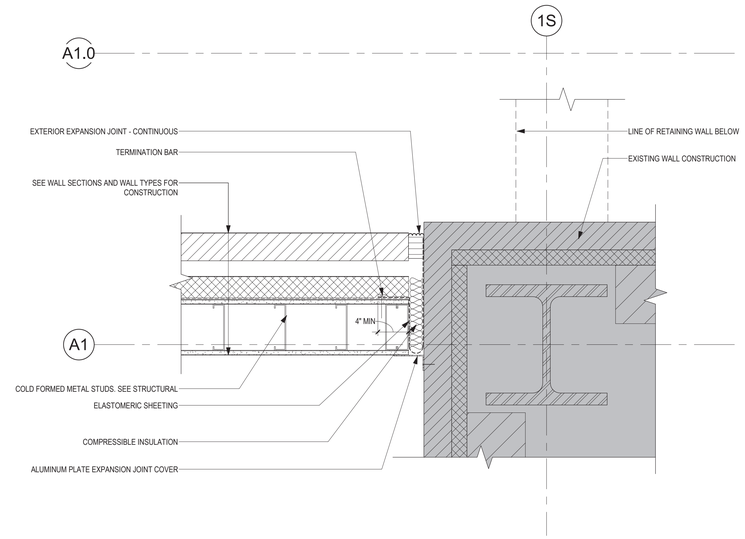

1 PLAN DETAIL - BRICK AND STEEL STUD AT EXISTING BRICK
1 1/2" = 1'-0"

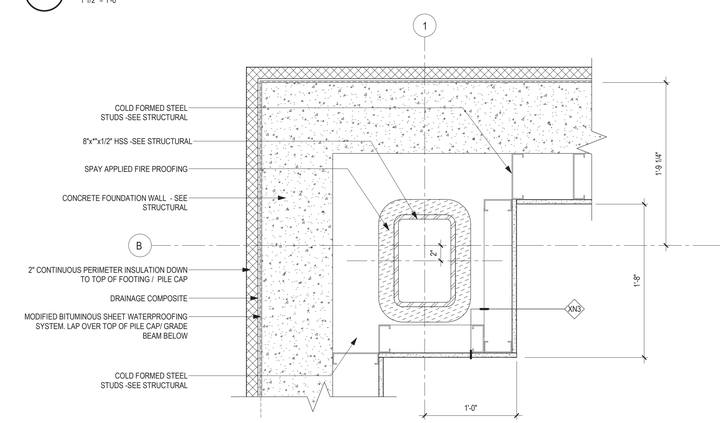

4 PLAN DETAIL - EXERIOR WALL AT COLUMN B-1 BELOW GRADE
1 1/2" = 1'-0"

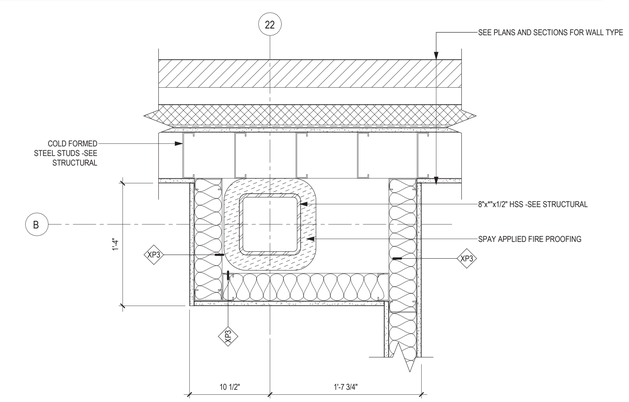

7 PLAN DETAIL - EXERIOR WALL AT COLUMN B-22 - MENS SHOWER H12A
1 1/2" = 1'-0"

Revisions:	Date:

CONSULTANT

IMEG

ARCHITECT/ENGINEER OF RECORD

ANDERSON

13605 1st Ave. N. #100 Plymouth, MN 55441
P 763.412.4000 | F 763.412.4090 | ae-mn.com
Anderson Engineering of Minnesota, LLC | Proj # 16584

STAMP

REGISTERED PROFESSIONAL ENGINEER STATE OF SOUTH DAKOTA 9335 JONATHAN A. OLESAK

DATE: 08/04/2022
License # 9335

Office of Construction and Facilities Management

VA U.S. Department of Veterans Affairs

Drawing Title: EXTERIOR PLAN DETAILS

Approved:

Phase: BID DOCUMENTS

FULLY SPRINKLERED

Project Title: CONSTRUCT NEW SPS

Location: Sioux Falls, SD.

Issue Date: 08/04/2022

Checked: Checker

Drawn: Author

Project Number: 438-460

Building Number: 5

Drawing Number: AE503

VA FORM 08 - 6231

7/7/2023 1:28:03 PM

C:\Users\Public\Documents\Revit Projects\16584-R21_gbartsel@ae-mn.com.rvt

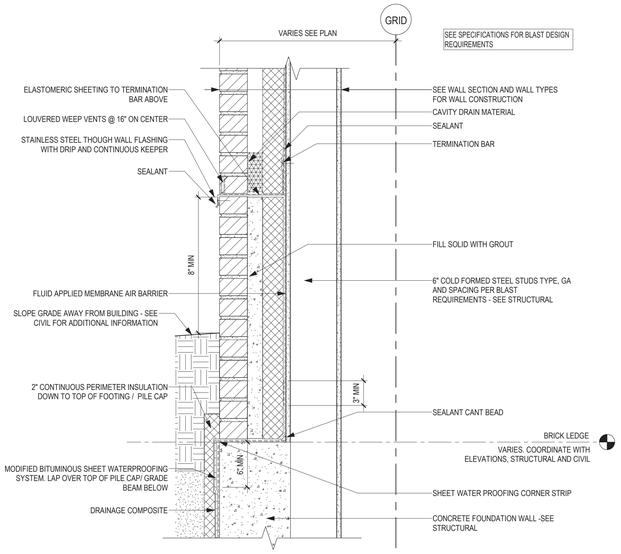

2 SECTION DETAIL - FACEBRICK AND METAL STUD AT GRADE
1 1/2" = 1'-0"

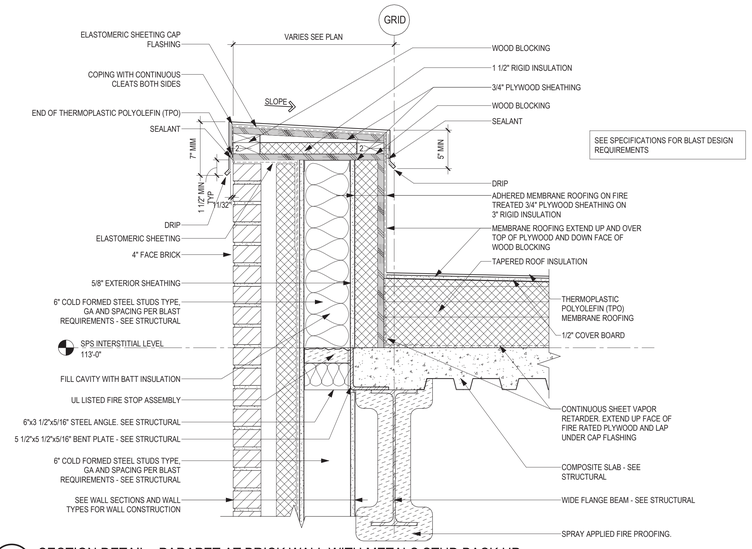

1 SECTION DETAIL - PARAPET AT BRICK WALL WITH METALS STUD BACK UP
1 1/2" = 1'-0"

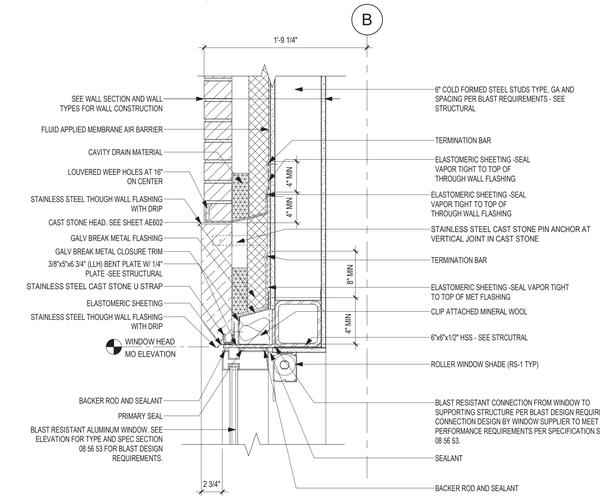

3 SECTION DETAIL - WINDOW HEAD @ BRICK (TYP)
1 1/2" = 1'-0"

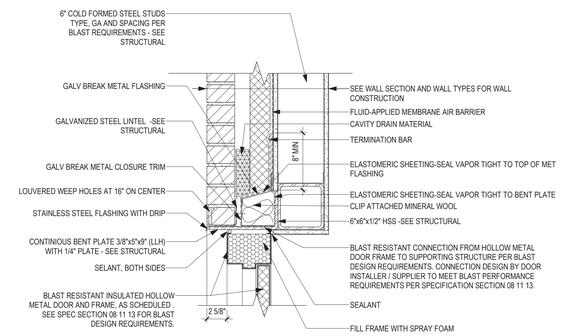

4 SECTION DETAIL - HM FRAME HEAD AT METAL STUD BACK UP AND FACE BRICK
1 1/2" = 1'-0"

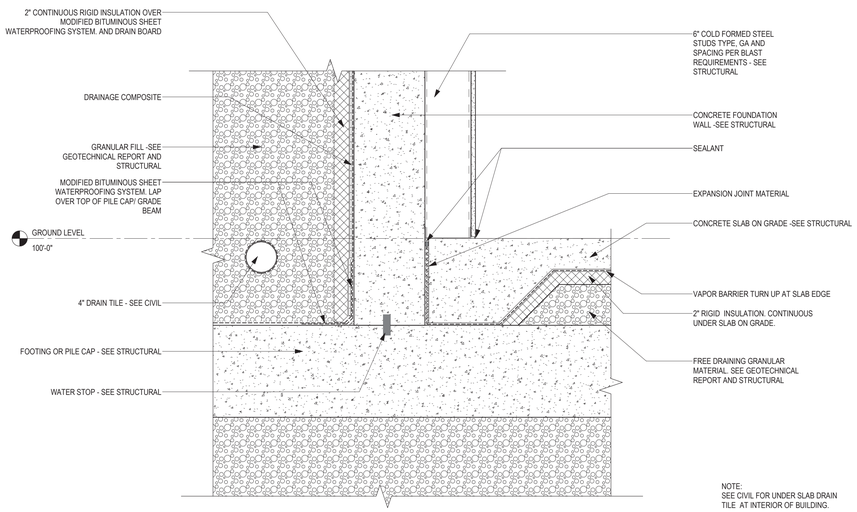

7 SECTION DETAIL - GRADE BEAM / PILE CAP AND FOUNDAION WALL WATERPROOFING (TYP)
1 1/2" = 1'-0"

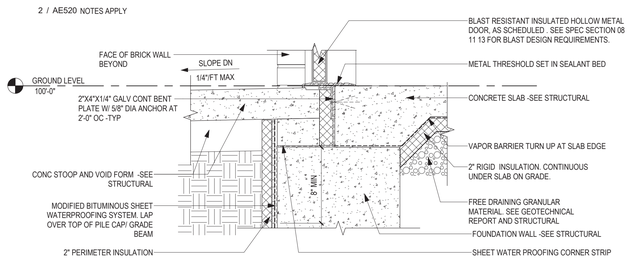

6 SECTION DETAIL EXTERIOR - DOOR SILL
1 1/2" = 1'-0"

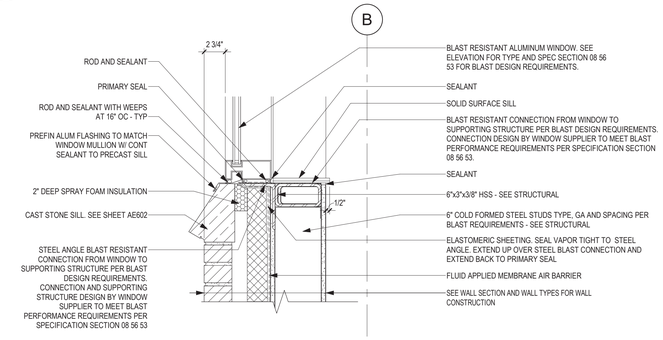

5 SECTION DETAIL - WINDOW SILL @ BRICK (TYP)
1 1/2" = 1'-0"

Revisions:	Date:

CONSULTANT

IMEG

ARCHITECT/ENGINEER OF RECORD

ANDERSON
13605 1st Ave. N. #100 Plymouth, MN 55441
P 763.412.4000 | F 763.412.4090 | ae-mn.com
Anderson Engineering of Minnesota, LLC | Proj # 16584

STAMP
REGISTERED PROFESSIONAL ENGINEER REG. NO. 9335 THOMAS A. OLESAK SOUTH DAKOTA
DATE: 08/04/2022
License # 9335

Office of Construction and Facilities Management

VA U.S. Department of Veterans Affairs

Drawing Title: EXTERIOR SECTION DETAILS

Approved:

Phase: BID DOCUMENTS

FULLY SPRINKLERED

Project Title: CONSTRUCT NEW SPS

Project Number: 438-460

Building Number: 5

Location: Sioux Falls, SD.

Issue Date: 08/04/2022

Checked: Checker

Drawn: Author

Drawing Number: AE520

VA FORM 08 - 6231

C:\Users\Public\Documents\Revit Projects\16584-R21_gbarbari@ae-mn.com.rvt

7/7/2023 1:28:06 PM

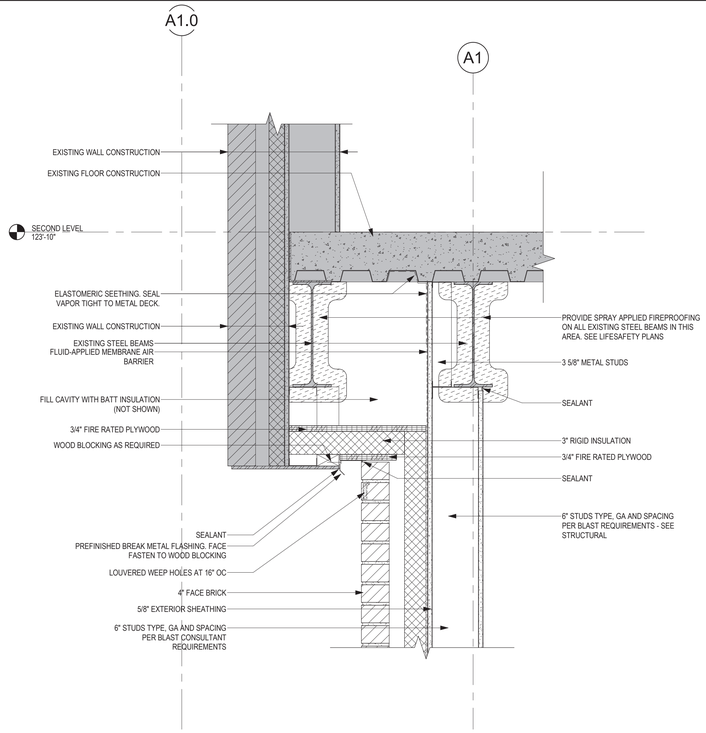

3 SECTION DETAIL - SOFFIT AT EXISTING ADDITION
1 1/2" = 1'-0"

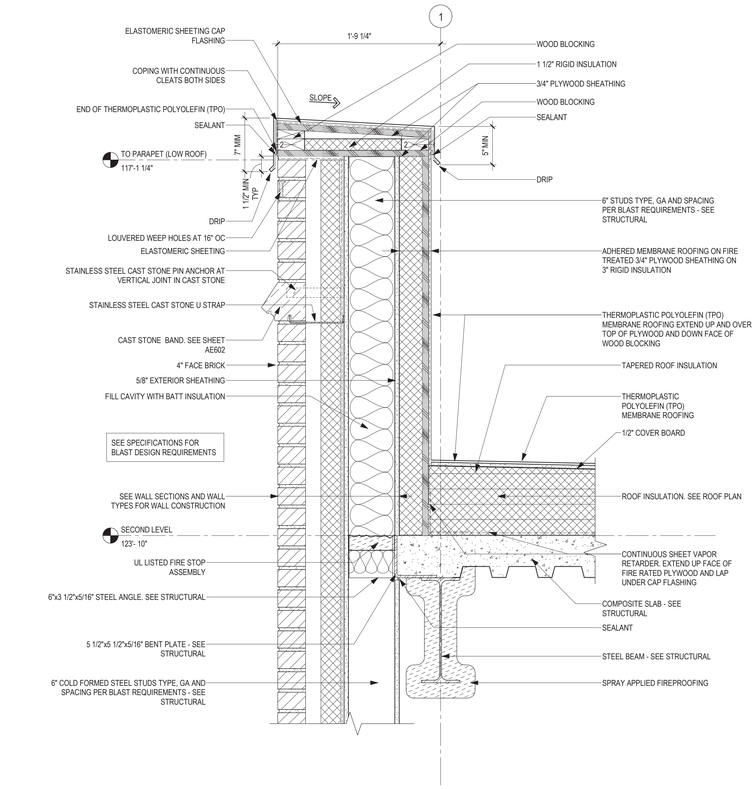

2 SECTION DETAIL - PARAPET AT BRICK WALL WITH METALS STUD - LOW ROOF
1 1/2" = 1'-0"

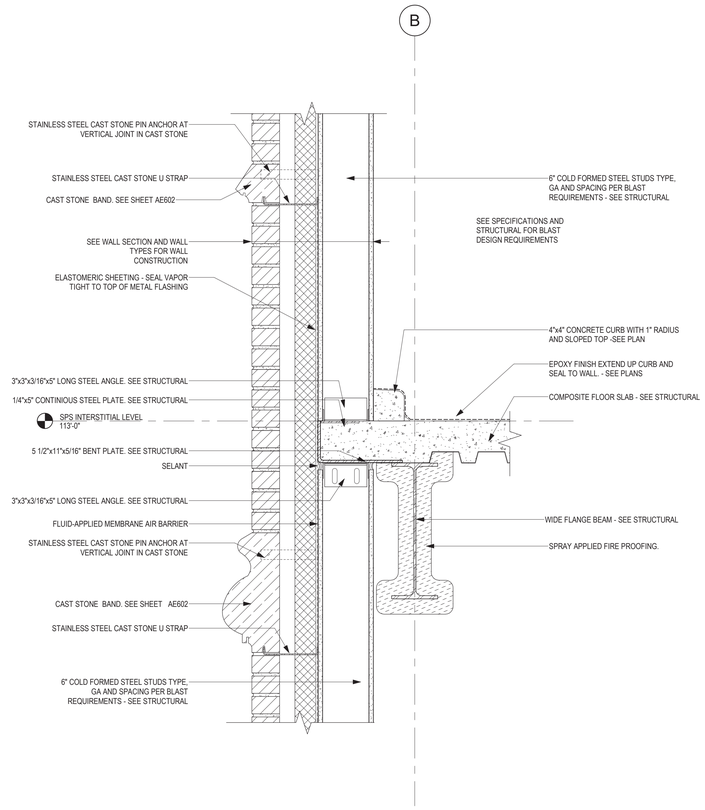

1 SECTION DETAIL - STONE BAND & SLAB EDGE
1 1/2" = 1'-0"

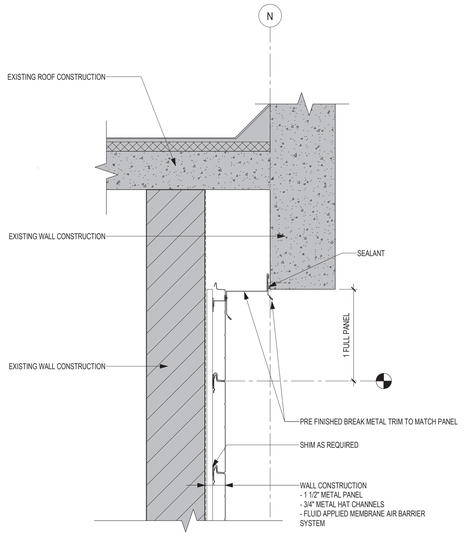

5 SECTION DETAIL - METAL PANEL AT PARAPET
1 1/2" = 1'-0"

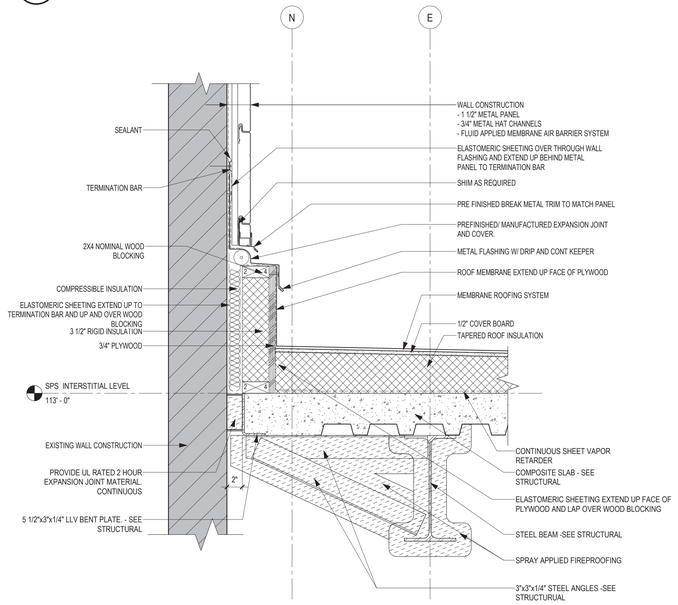

6 SECTION DETAIL - METAL PANEL BASE @ LOW ROOF GRID N
1 1/2" = 1'-0"

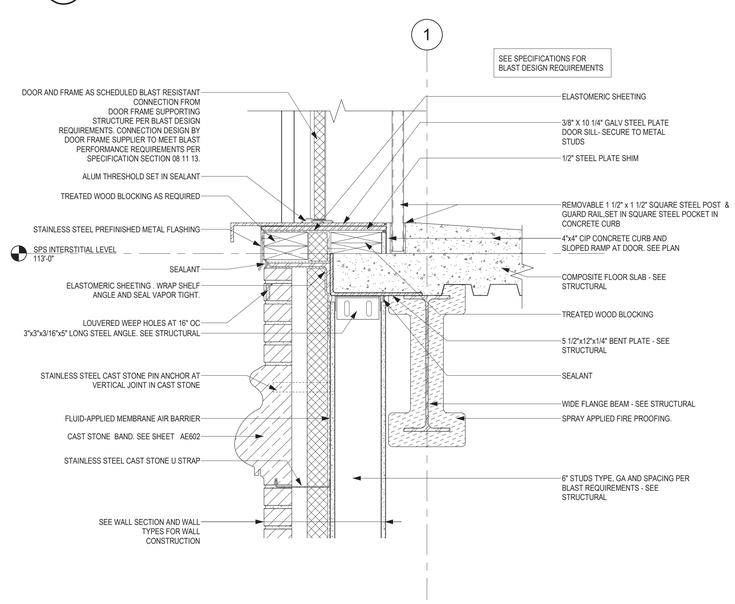

4 SECTION DETAIL - INTERSTITAL DOOR SILL AND STONE BAND
1 1/2" = 1'-0"

Revisions:	Date:

CONSULTANT

IMEG

ARCHITECT/ENGINEER OF RECORD

ANDERSON

13605 1st Ave. N. #100 Plymouth, MN 55441
P 763.412.4000 | F 763.412.4090 | ae-mn.com
Anderson Engineering of Minnesota, LLC | Proj # 16584

STAMP

REGISTERED PROFESSIONAL ENGINEER — THOMAS A. OLESIAK — 9335 — NORTH DAKOTA

DATE: 08/04/2022
License # 9335

Office of Construction and Facilities Management

VA U.S. Department of Veterans Affairs

Drawing Title: EXTERIOR SECTION DETAILS

Approved:

Phase: BID DOCUMENTS

FULLY SPRINKLERED

Project Title: CONSTRUCT NEW SPS

Location: Sioux Falls, SD.

Issue Date: 08/04/2022 | Checked: Checker | Drawn: Author

Project Number: 438-460

Building Number: 5

Drawing Number: AE521

VA FORM 08 - 6231

7/7/2023 1:28:09 PM

C:\Users\Public\Documents\Revit Projects\16584-R21_jpaxhall@ae-mn.com.rvt

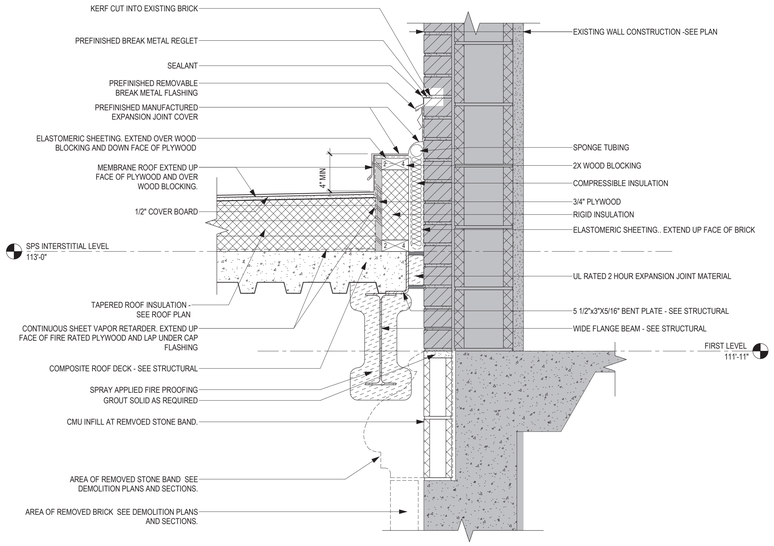

3 ROOF DETAIL - MEMBRANE ROOF @ EXISTING BRICK
1 1/2" = 1'-0"

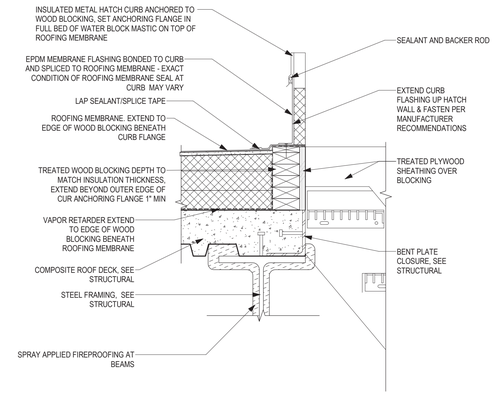

2 ROOF DETAIL - ROOF HATCH CURB
1 1/2" = 1'-0"

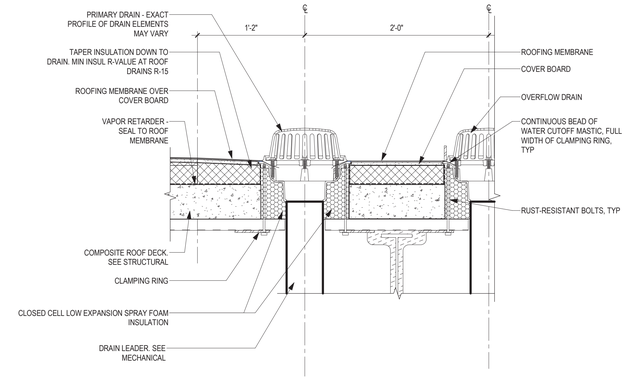

1 SECTION DETAIL - ROOF DRAINS
1 1/2" = 1'-0"

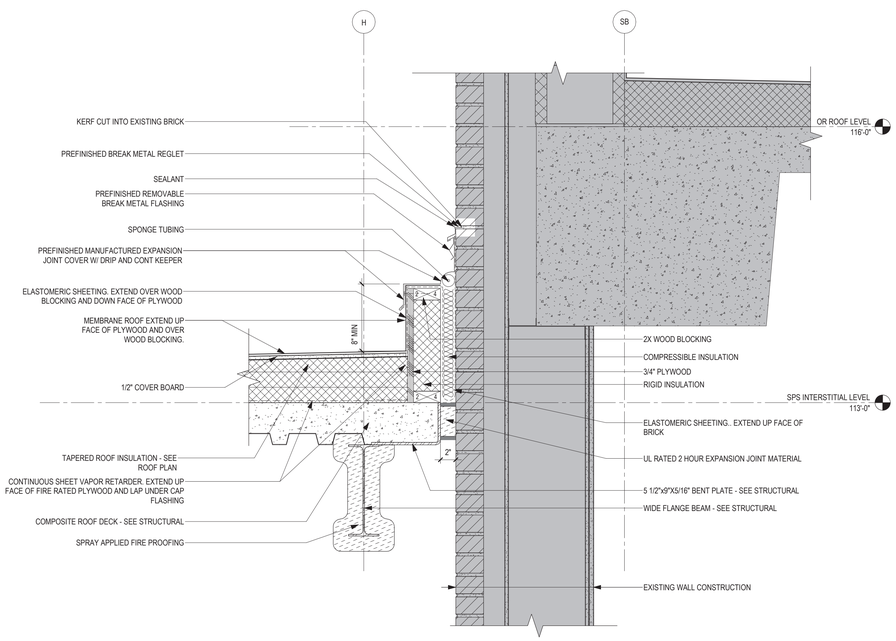

6 ROOF DETAIL - MEMBRANE ROOF @ OPERATING ROOM SUITE
1 1/2" = 1'-0"

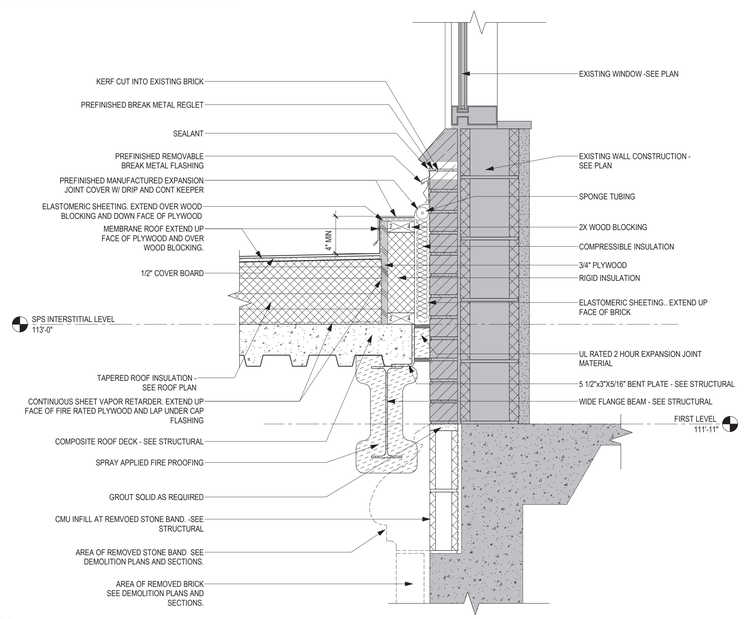

5 ROOF DETAIL - MEMBRANE ROOF @ FIRST LEVEL WINDOW
1 1/2" = 1'-0"

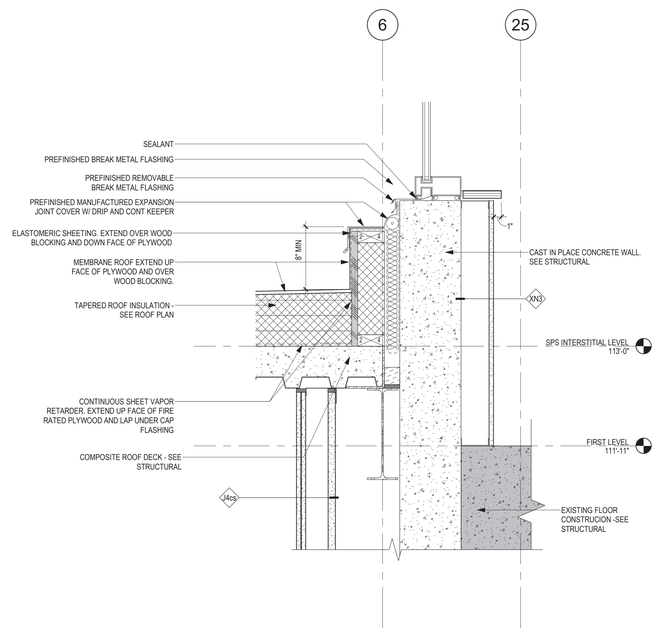

4 ROOF DETAIL - ROOF ANT MODIFIED CURTIAN WALL
1 1/2" = 1'-0"

Revisions:	Date:

CONSULTANT

IMEG

ARCHITECT/ENGINEER OF RECORD

ANDERSON

13605 1st Ave. N. #100 Plymouth, MN 55441
P 763.412.4000 | F 763.412.4090 | ae-mn.com
Anderson Engineering of Minnesota, LLC | Proj # 16584

STAMP

REGISTERED PROFESSIONAL ENGINEER THOMAS A. OLESIAK NORTH DAKOTA

DATE: 08/04/2022
License # 9335

Office of Construction and Facilities Management

VA U.S. Department of Veterans Affairs

Drawing Title: ROOF DETAILS

Approved:

Phase: BID DOCUMENTS

FULLY SPRINKLERED

Project Title: CONSTRUCT NEW SPS

Location: Sioux Falls, SD.

Issue Date: 08/04/2022

Checked: Checker

Drawn: Author

Project Number: 438-460

Building Number: 5

Drawing Number: AE530

VA FORM 08 - 6231

7/7/2023 1:28:11 PM

C:\Users\Public\Documents\Revit Projects\16584-R21_jbarfuel@ae-mn.com.rvt

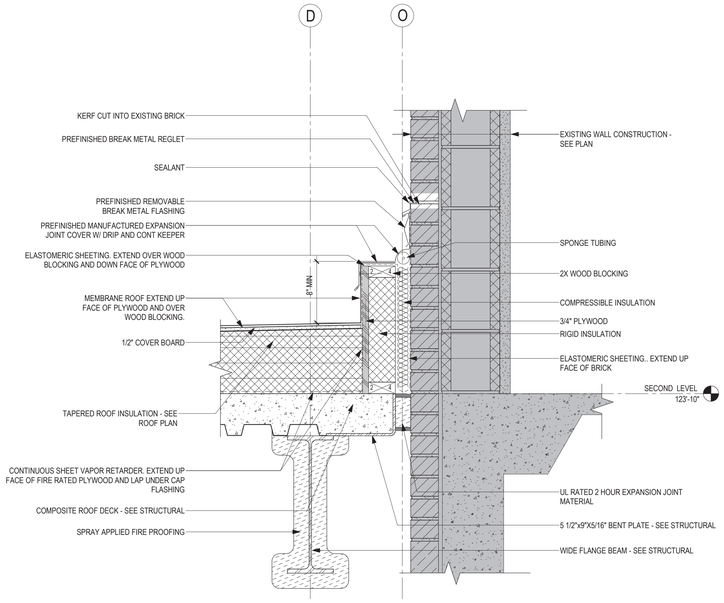

2 ROOF DETAIL - MEMBRANE ROOF @ EXISTING SECOND LEVEL
1 1/2" = 1'-0"

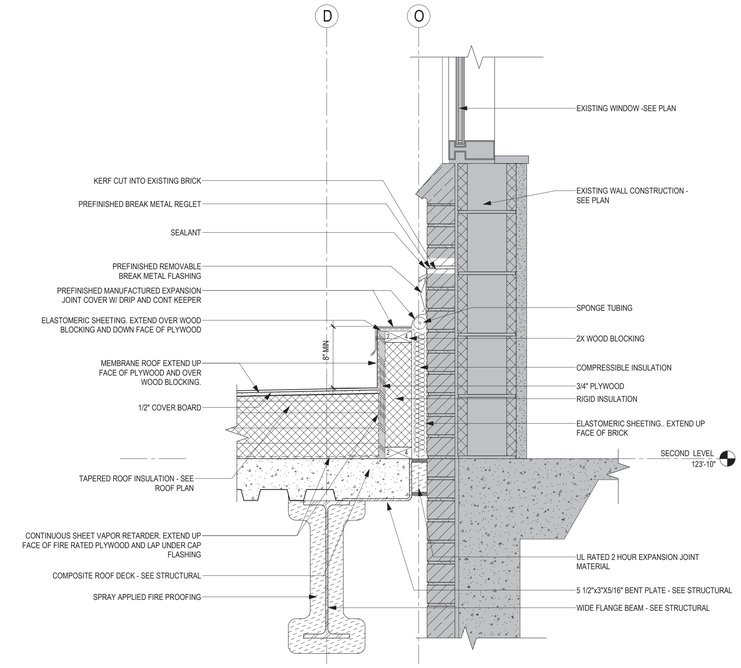

1 ROOF DETAIL - MEMBRANE ROOF @ EXISTING SECOND LEVEL WINDOW
1 1/2" = 1'-0"

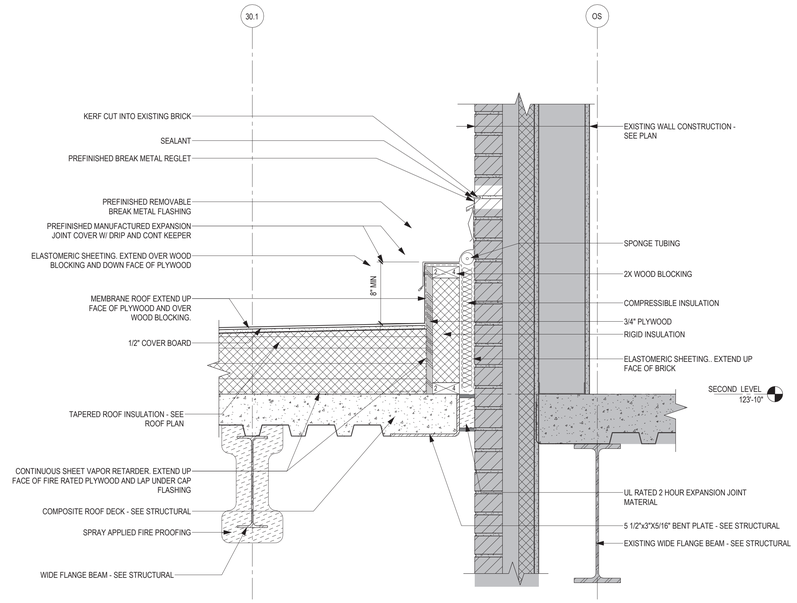

3 ROOF DETAIL - MEMBRANE ROOF @ INPATIENT ADDITION - GRID OS
1 1/2" = 1'-0"

Revisions:	Date:

CONSULTANT

IMEG

ARCHITECT/ENGINEER OF RECORD

ANDERSON

13605 1st Ave. N. #100 Plymouth, MN 55441
P 763.412.4000 | F 763.412.4090 | ae-mn.com
Anderson Engineering of Minnesota, LLC | Proj # 16584

STAMP

REGISTERED PROFESSIONAL ARCHITECT THOMAS A. OLESAK SOUTH DAKOTA

DATE: 08/04/2022
License # 9335

Office of Construction and Facilities Management

VA U.S. Department of Veterans Affairs

Drawing Title: ROOF DETAILS

Approved:

Phase: BID DOCUMENTS

FULLY SPRINKLERED

Project Title: CONSTRUCT NEW SPS

Location: Sioux Falls, SD.

Issue Date: 08/04/2022

Checked: Checker

Drawn: Author

Project Number: 438-460

Building Number: 5

Drawing Number: AE531

VA FORM 08 - 6231

7/7/2023 1:28:13 PM

C:\Users\Public\Documents\Revit Projects\16584-R21_jbarbari@ae-mn.com.rvt

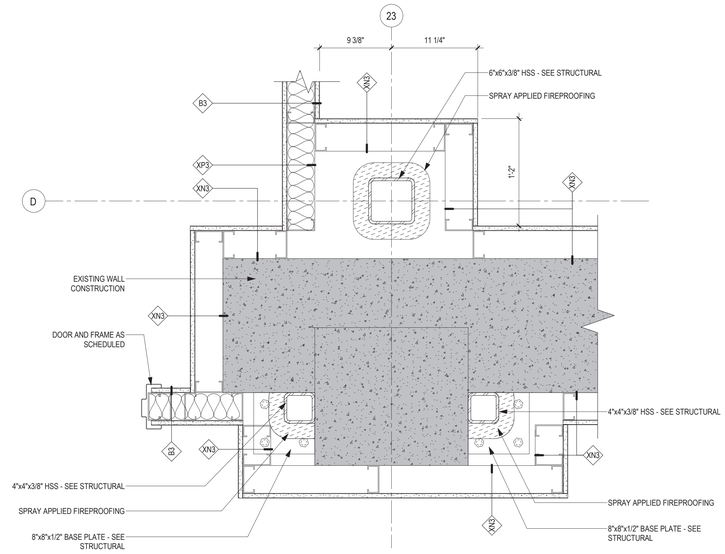

4 PLAN DETAIL - PARTITION @ COLUMN D-23
1 1/2" = 1'-0"

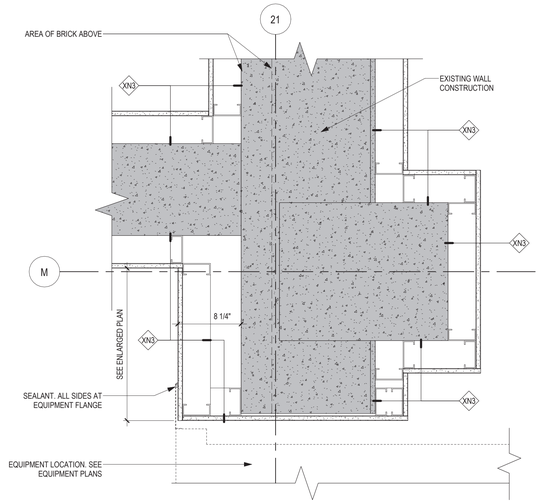

3 PLAN DETAIL - PARTITION OPENING AT STEAM STERILIZER
1 1/2" = 1'-0"

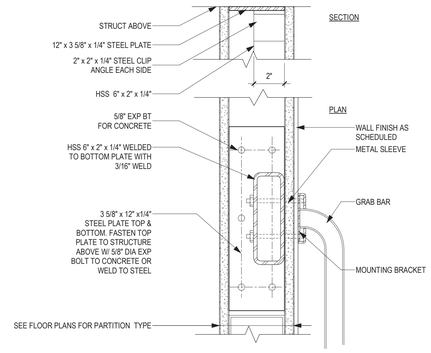

2 DETAIL - GRAB BAR SUPPORT - STEEL
3" = 1'-0"

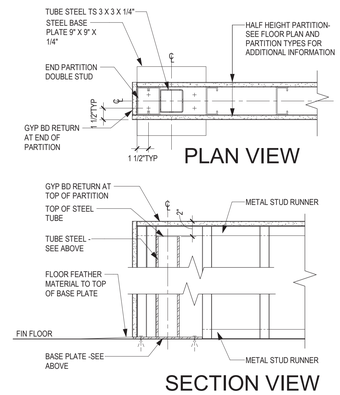

1 INTERIOR DETAIL - PARTIAL HEIGHT PARTITION-STEEL SUPPORT
1 1/2" = 1'-0"

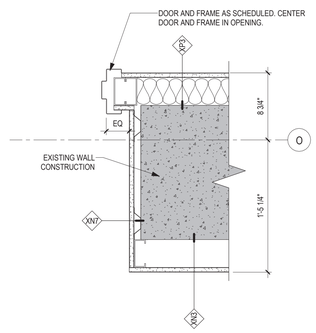

8 PLAN DETAIL - PARTITION AND DOOR JAMB AT DOOR H20AA
1 1/2" = 1'-0"

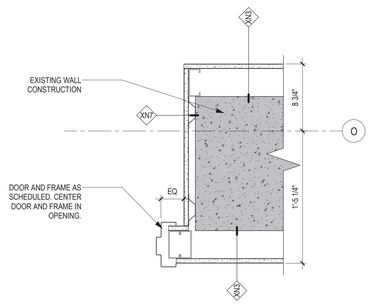

7 PLAN DETAIL - PARTITION AND DOOR JAMB AT DOOR H26B
1 1/2" = 1'-0"

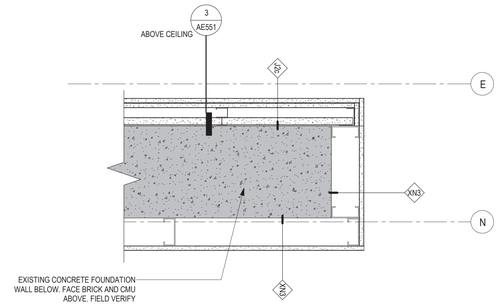

6 PLAN DETAIL - PARTITION AT OPENING IN STAIR TOWER FOUNDATION - SOUTH
1 1/2" = 1'-0"

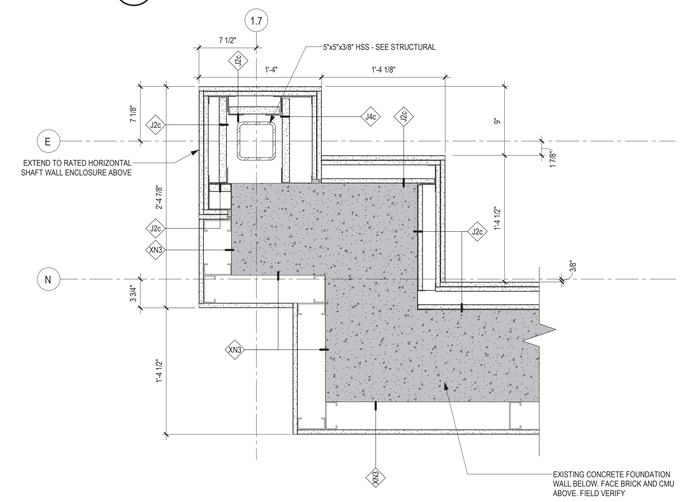

5 PLAN DETAIL - PARTITION AT OPENING IN STAIR TOWER FOUNDATION - NORTH
1 1/2" = 1'-0"

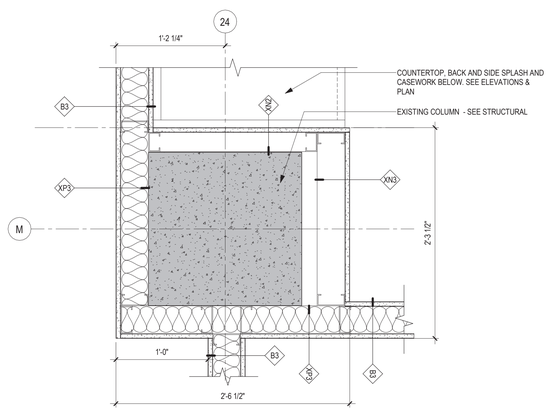

11 PLAN DETAIL - PARTITION @ COLUMN M-24
1 1/2" = 1'-0"

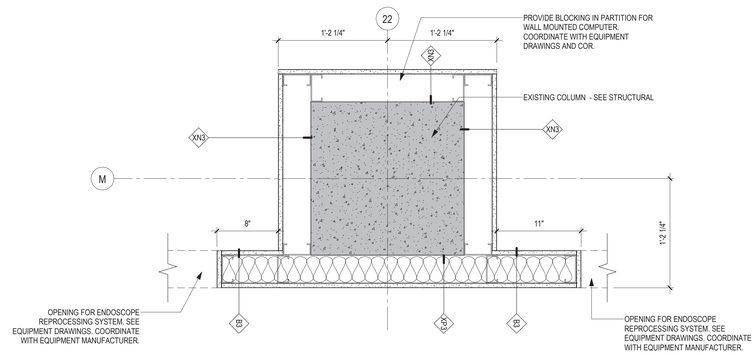

10 PLAN DETAIL - PARTITION @ COLUMN M-23
1 1/2" = 1'-0"

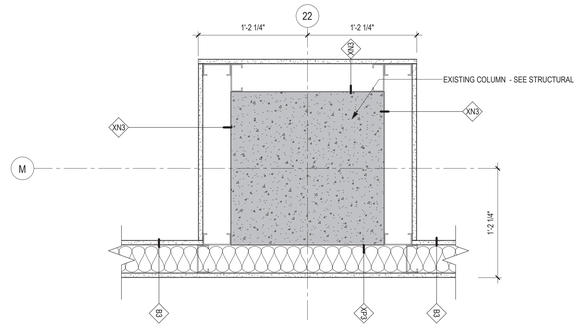

9 PLAN DETAIL - PARTITION @ COLUMN M-22
1 1/2" = 1'-0"

Revisions:	Date:

CONSULTANT

IMEG

ARCHITECT/ENGINEER OF RECORD

ANDERSON

13605 1st Ave. N. #100 Plymouth, MN 55441
P 763.412.4000 | F 763.412.4090 | ae-mn.com
Anderson Engineering of Minnesota, LLC | Proj # 16584

STAMP

REGISTERED PROFESSIONAL ENGINEER THOMAS A. OLESAK SOUTH DAKOTA

DATE: 08/04/2022
License # 9335

Office of Construction and Facilities Management

VA U.S. Department of Veterans Affairs

Drawing Title: INTERIOR PLAN DETAILS

Approved:

Phase: BID DOCUMENTS

FULLY SPRINKLERED

Project Title: CONSTRUCT NEW SPS

Project Number: 438-460

Building Number: 5

Location: Sioux Falls, SD.

Issue Date: 08/04/2022

Checked: Checker

Drawn: Author

Drawing Number: AE540

VA FORM 08 - 6231

7/7/2023 1:28:16 PM

C:\Users\Public\Documents\Revit Projects\16584-R21_jbarbari@ae-mn.com.rvt

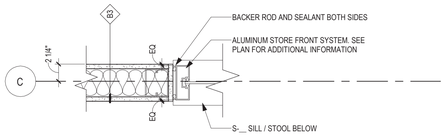

4 PLAN DETAIL - INTERIOR ALUM STOREFRONT JAMB (TYP)
1 1/2" = 1'-0"

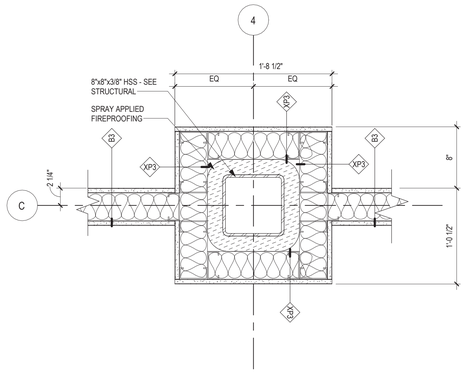

3 PLAN DETAIL - PARTITION @ COLUMN C-4 (TYP)
1 1/2" = 1'-0"

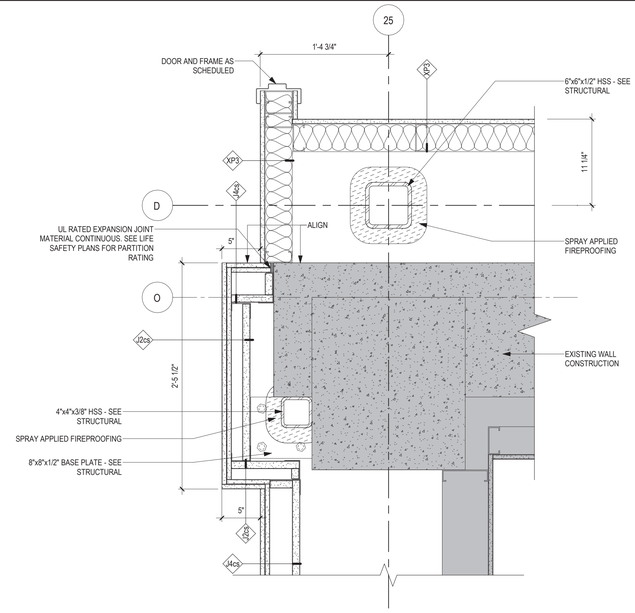

2 PLAN DETAIL - PARTITION @ COLUMN O-25
1 1/2" = 1'-0"

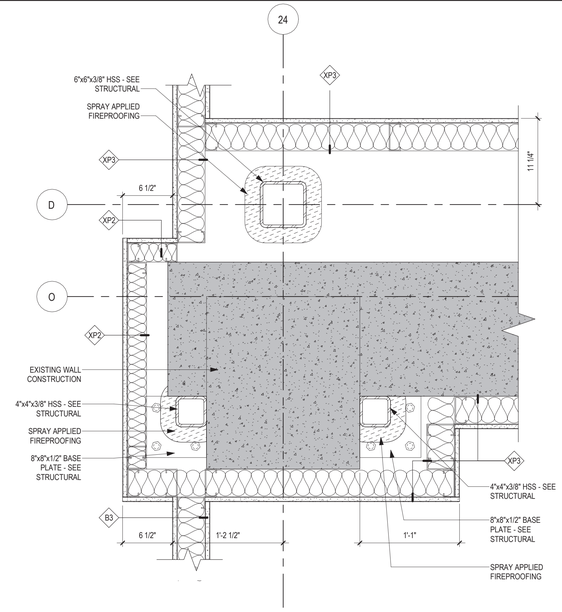

1 PLAN DETAIL - PARTITION @ COLUMN O-24
1 1/2" = 1'-0"

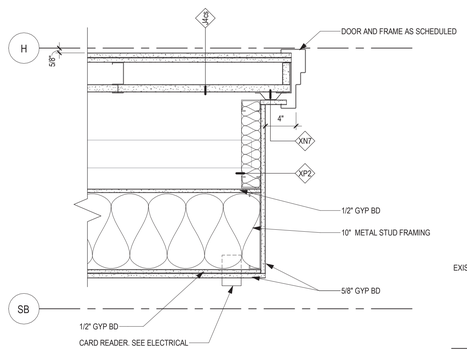

8 PLAN DETAIL - PARTITION / DOOR JAMB @ OR SUITE WITH WINDOW INFILL
1 1/2" = 1'-0"

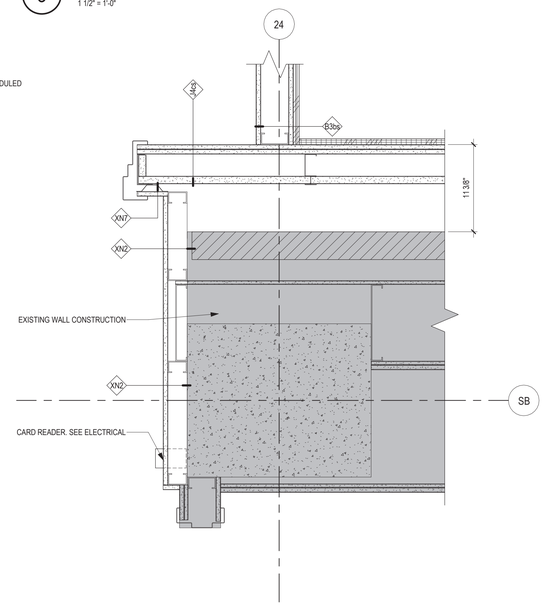

7 PLAN DETAIL - PARTITION / DOOR JAMB @ OPENING TO OR SUITE
1 1/2" = 1'-0"

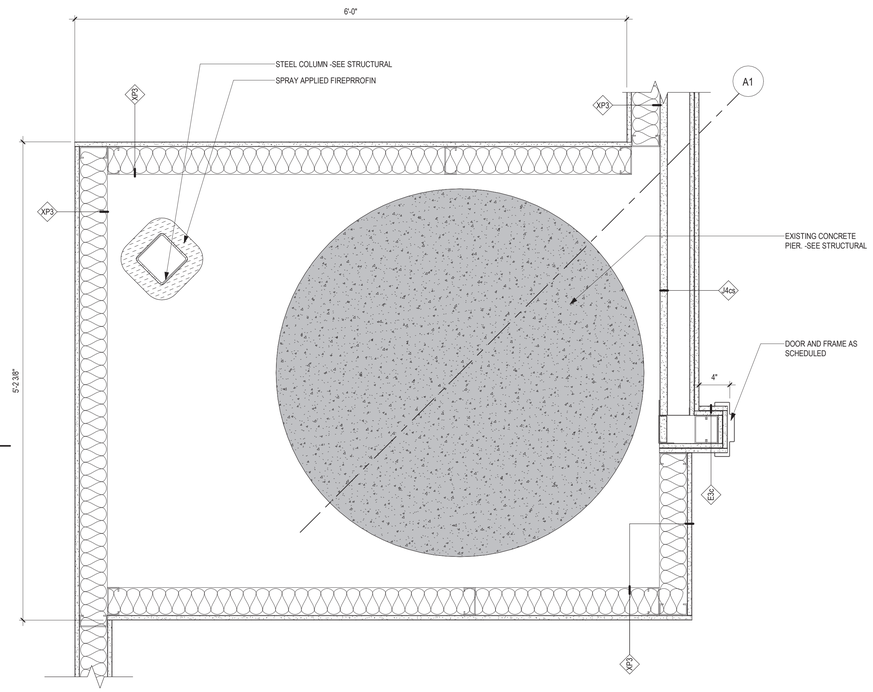

6 PLAN DETAIL - PARTITION @ EXISTING CONCRETE PIER
1 1/2" = 1'-0"

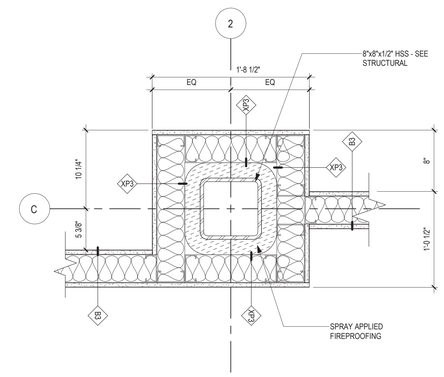

5 PLAN DETAIL - PARTITION @ COLUMN C-2
1 1/2" = 1'-0"

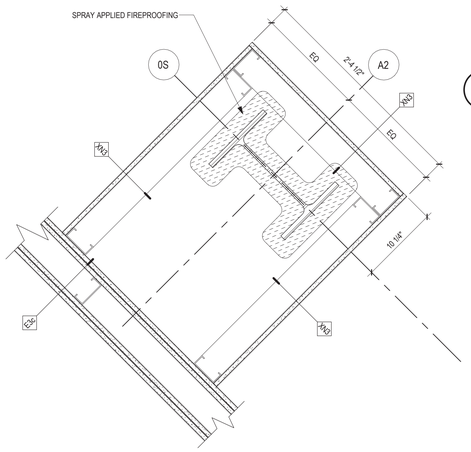

9 PLAN DETAIL - PARTITION @ COLUMN A2-0S
1 1/2" = 1'-0"

Revisions:	Date:

CONSULTANT

IMEG

ARCHITECT/ENGINEER OF RECORD

ANDERSON

13605 1st Ave. N. #100 Plymouth, MN 55441
P 763.412.4000 | F 763.412.4090 | ae-mn.com
Anderson Engineering of Minnesota, LLC | Proj # 16584

STAMP

REGISTERED PROFESSIONAL ENGINEER REGISTERED ARCHITECT THOMAS A. OLESIAK SOUTH DAKOTA

DATE: 08/04/2022
License # 9335

Office of Construction and Facilities Management

VA U.S. Department of Veterans Affairs

Drawing Title: INTERIOR PLAN DETAILS

Approved:

Phase: BID DOCUMENTS

FULLY SPRINKLERED

Project Title: CONSTRUCT NEW SPS

Location: Sioux Falls, SD.

Issue Date: 08/04/2022 | Checked: Checker | Drawn: Author

Project Number: 438-460

Building Number: 5

Drawing Number: AE541

VA FORM 08 - 6231

C:\Users\Public\Documents\Revit Projects\16584-R21_jbarbiel@ae-mn.com.rvt

7/7/2023 1:28:19 PM

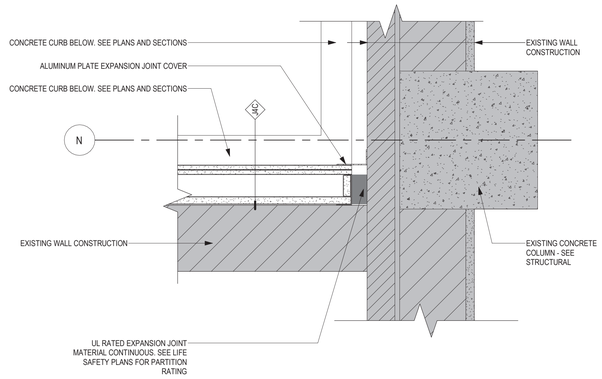

4 PLAN DETAIL - RATED PARTITION AND EXPANSION JOINT AT EXISTING STAIR
1 1/2" = 1'-0"

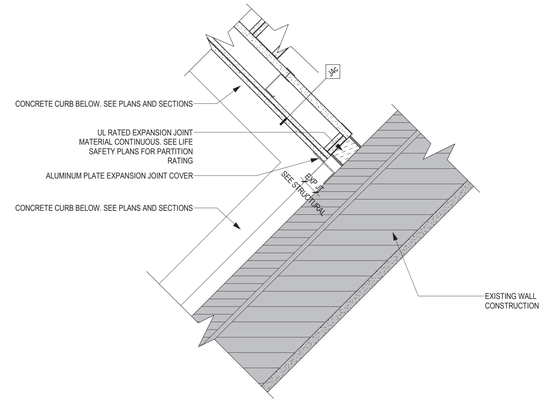

3 PLAN DETAIL - RATED PARTITION AND EXPANSION JOINT AT EXISTING
1 1/2" = 1'-0"

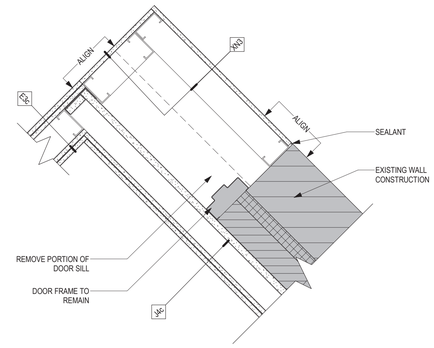

2 PLAN DETAIL - RATED PARTITION AT REMOVED DOOR
1 1/2" = 1'-0"

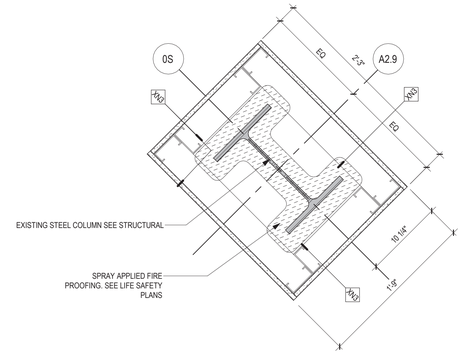

1 PLAN DETAIL - PARTITION @ COLUMN A2.9-0S
1 1/2" = 1'-0"

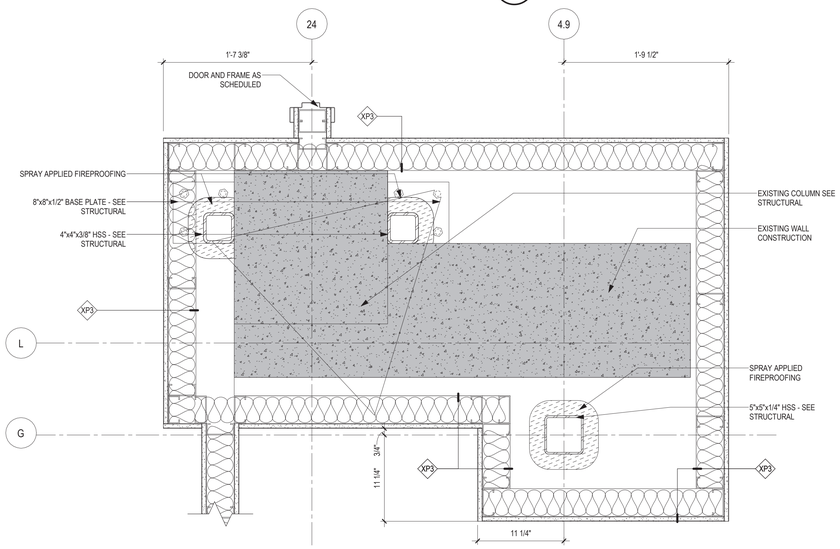

7 PLAN DETAIL - PARTITION @ COLUMN G-4.9
1 1/2" = 1'-0"

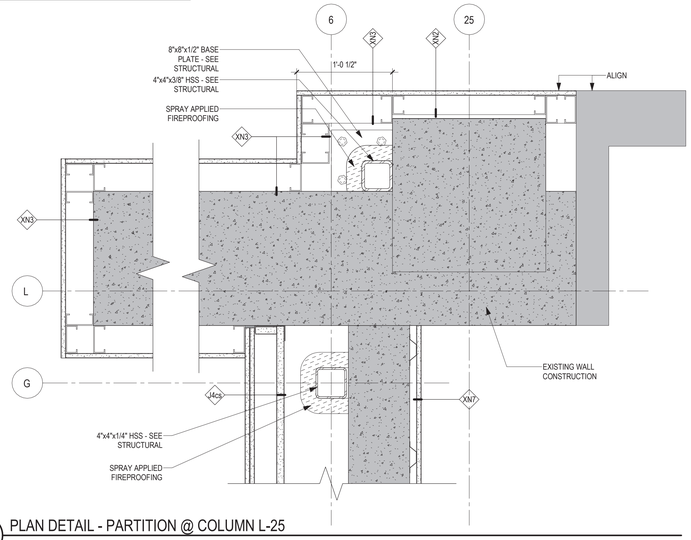

6 PLAN DETAIL - PARTITION @ COLUMN L-25
1 1/2" = 1'-0"

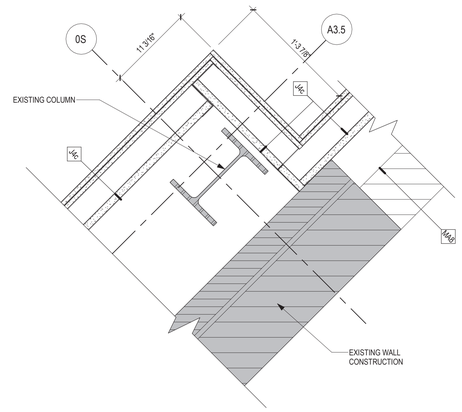

5 PLAN DETAIL - RATED PARTITION AT COLUMN 0S-A3.5
1 1/2" = 1'-0"

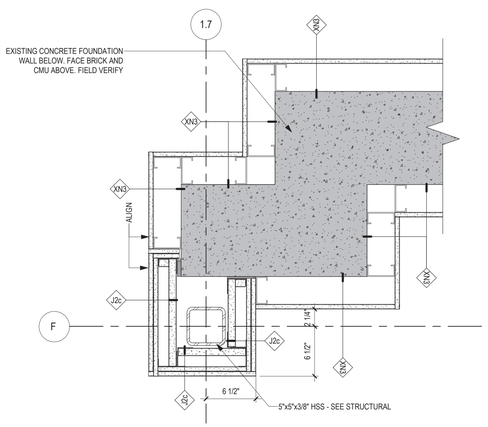

12 PLAN DETAIL - PARTITION @ COLUMN F-1.7
1 1/2" = 1'-0"

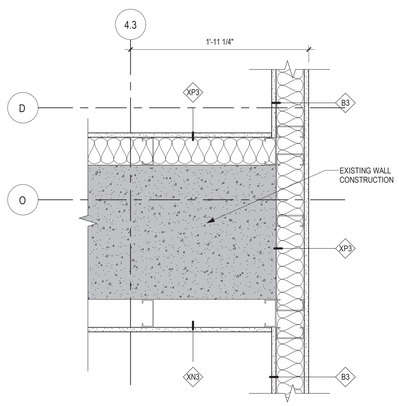

11 PLAN DETAIL - PARTITION @ COLUMN D-4.3
1 1/2" = 1'-0"

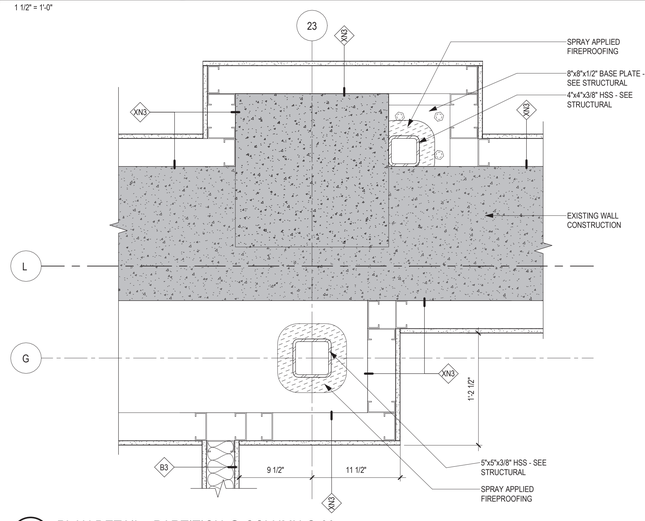

10 PLAN DETAIL - PARTITION @ COLUMN G-23
1 1/2" = 1'-0"

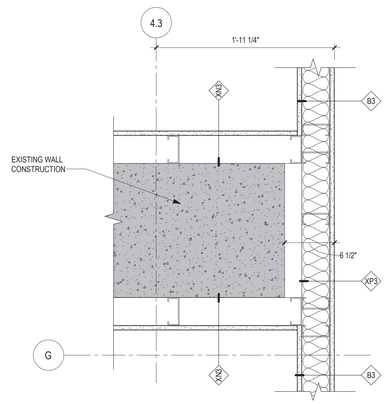

9 PLAN DETAIL - PARTITION @ COLUMN G-4.3
1 1/2" = 1'-0"

Revisions:	Date:

CONSULTANT

IMEG

ARCHITECT/ENGINEER OF RECORD

ANDERSON

13605 1st Ave. N. #100 Plymouth, MN 55441
P 763.412.4000 | F 763.412.4090 | ae-mn.com
Anderson Engineering of Minnesota, LLC | Proj # 16584

STAMP

REGISTERED PROFESSIONAL ARCHITECT THOMAS A. OLESAK SOUTH DAKOTA

DATE: 08/04/2022
License # 9335

Office of Construction and Facilities Management

VA U.S. Department of Veterans Affairs

Drawing Title: INTERIOR PLAN DETAILS

Approved:

Phase: BID DOCUMENTS

FULLY SPRINKLERED

Project Title: CONSTRUCT NEW SPS

Location: Sioux Falls, SD.

Issue Date: 08/04/2022

Checked: Checker

Drawn: Author

Project Number: 438-460

Building Number: 5

Drawing Number: AE542

VA FORM 08 - 6231

7/7/2023 1:28:22 PM

C:\Users\Public\Documents\Revit Projects\16584-R21_jbarbair@ae-mn.com.rvt

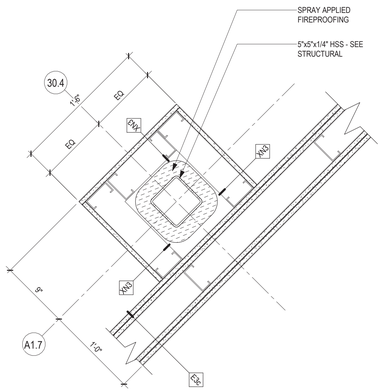

4 PLAN DETAIL - PARTITION @ COLUMN A1.7 - 30.4
1 1/2" = 1'-0"

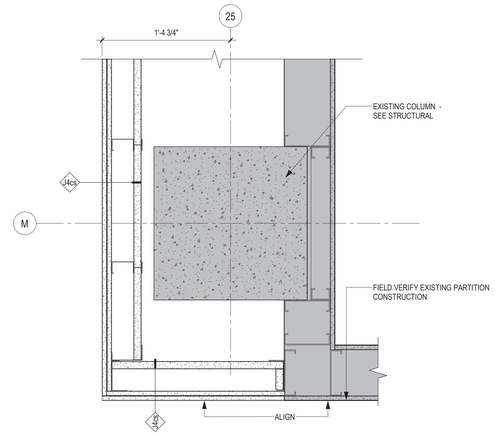

3 PLAN DETAIL - PARTITION @ COLUMN M-25
1 1/2" = 1'-0"

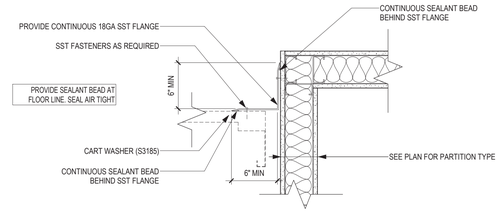

2 PLAN DETAIL - SST BARRIER FLANGE @ CART WASH
1 1/2" = 1'-0"

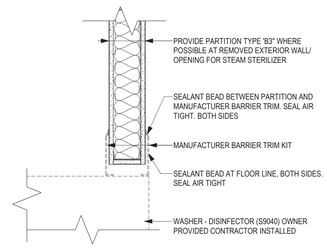

1 PLAN DETAIL - SST BARRIER FLANGE @ WASHER - DISINFECTOR
1 1/2" = 1'-0"

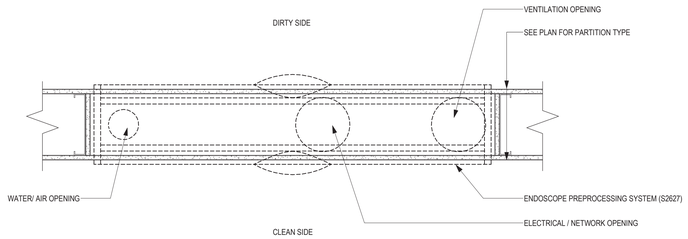

NOTE:
COORDINATE OPENING LOCATIONS AND SIZES WITH EQUIPMENT MANUFACTURER.

7 PLAN DETAIL - UNDERSIDE OF OPENING AT PREPROCESSOR FOR UTILITIES
1 1/2" = 1'-0"

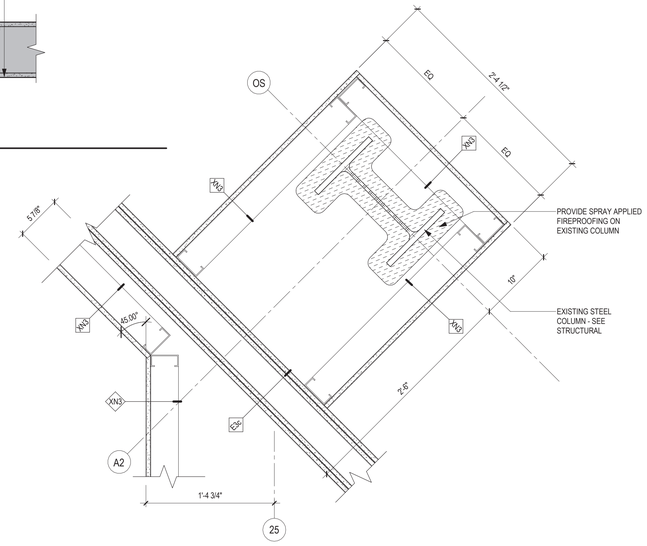

6 PLAN DETAIL - PARTITION @ COLUMN A2 -OS
1 1/2" = 1'-0"

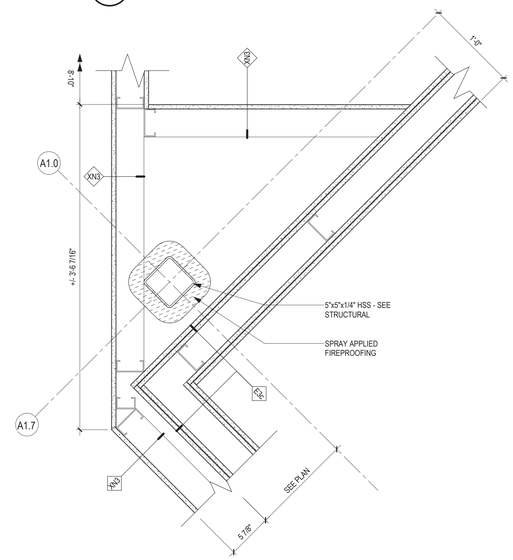

5 PLAN DETAIL - PARTITION @ COLUMN A1.7 - A1.0
1 1/2" = 1'-0"

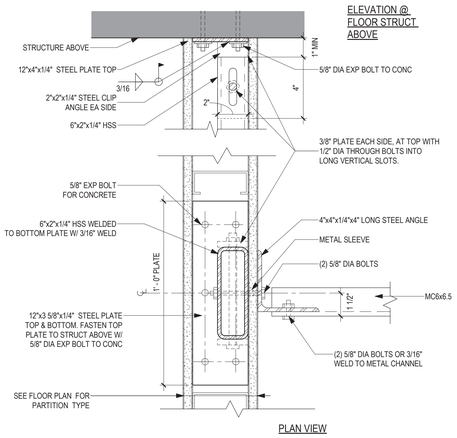

10 PLAN DETAIL - TOILET PARTITION METAL CHANEL SUPPORT
3" = 1'-0"

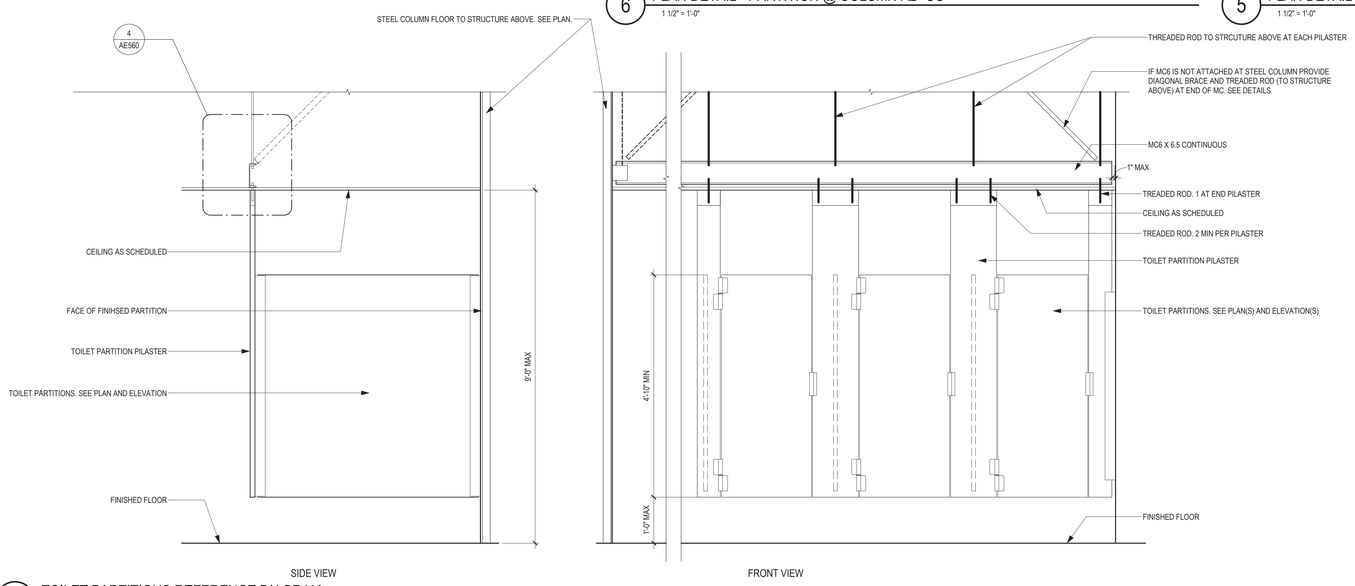

9 TOILET PARTITIONS REFERENCE DIAGRAM
3/4" = 1'-0"

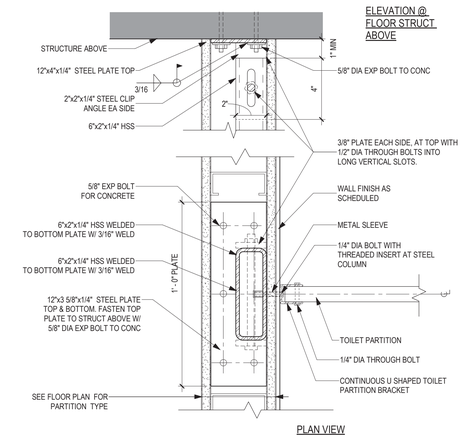

8 PLAN DETAIL - TOILET PARTITION SUPPORT
3" = 1'-0"

Revisions:	Date:

CONSULTANT

IMEG

ARCHITECT/ENGINEER OF RECORD

ANDERSON

13605 1st Ave. N. #100 Plymouth, MN 55441
P 763.412.4000 | F 763.412.4090 | ae-mn.com
Anderson Engineering of Minnesota, LLC | Proj # 16584

STAMP

REGISTERED PROFESSIONAL ARCHITECT
STEVE TOLL
NO. 9335
THOMAS A. OLESAK
SOUTH DAKOTA
DATE: 08/04/2022
License # 9335

Office of Construction and Facilities Management

VA U.S. Department of Veterans Affairs

Drawing Title: INTERIOR PLAN DETAILS

Approved:

Phase: BID DOCUMENTS

FULLY SPRINKLERED

Project Title: CONSTRUCT NEW SPS

Location: Sioux Falls, SD.

Issue Date: 08/04/2022 | Checked: Checker | Drawn: Author

Project Number: 438-460

Building Number: 5

Drawing Number: AE543

VA FORM 08 - 6231

C:\Users\Public\Documents\Revit Projects\16584-R21_gbartsel@ae-mn.com.rvt

7/7/2023 1:28:25 PM

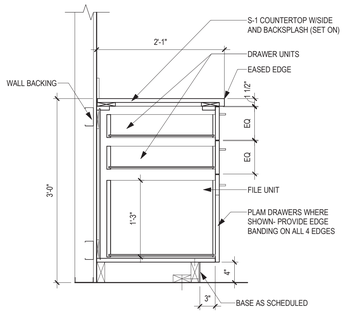

5 SECTION - BASE CABINET 3 DRAWER W/ 2 EQ
1" = 1'-0"

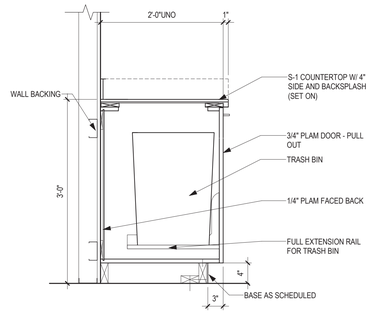

4 SECTION - BASE CABINET TRASH
1" = 1'-0"

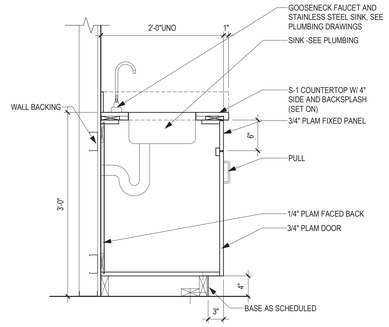

3 SECTION - BASE CABINET WITH SINK
1" = 1'-0"

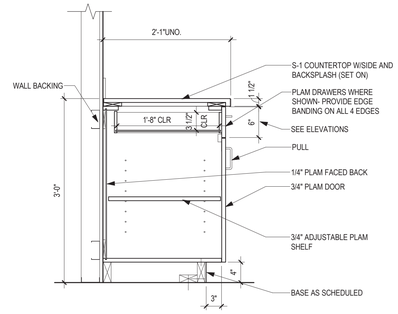

2 SECTION - BASE CABINET DRAWER & DOOR
1" = 1'-0"

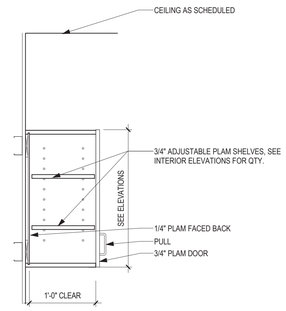

1 SECTION - WALL CABINET WITH DOOR
1" = 1'-0"

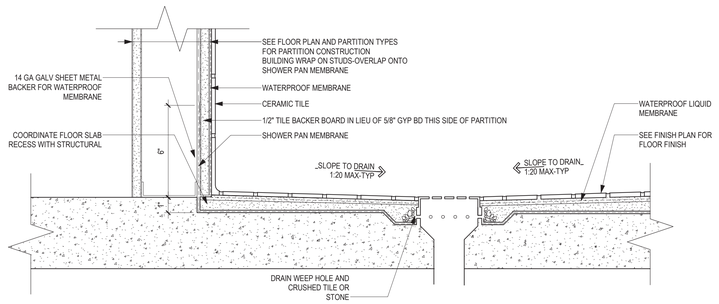

10 SECTION DETAIL INTERIOR - WATERPROOFING AT TOILET ROOM FLOOR
3" = 1'-0"

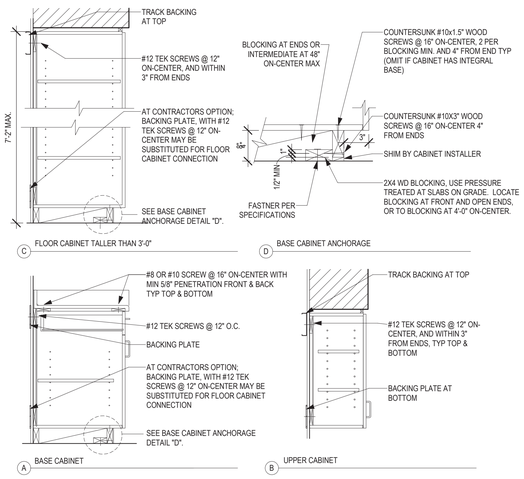

9 CASEWORK ANCHORAGE
3/4" = 1'-0"

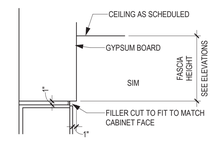

7 CASEWORK / LOCKERS AT GYP BD SOFFIT
3/4" = 1'-0"

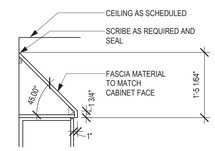

8 CASEWORK UPPER WITH SLOPED TOP
3/4" = 1'-0"

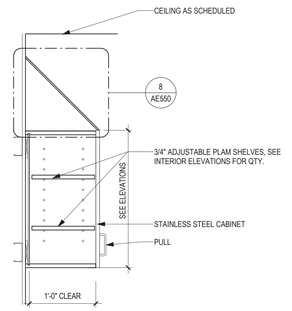

6 SECTION - STAINLESS STEEL WALL CABINET WITH DOOR
1" = 1'-0"

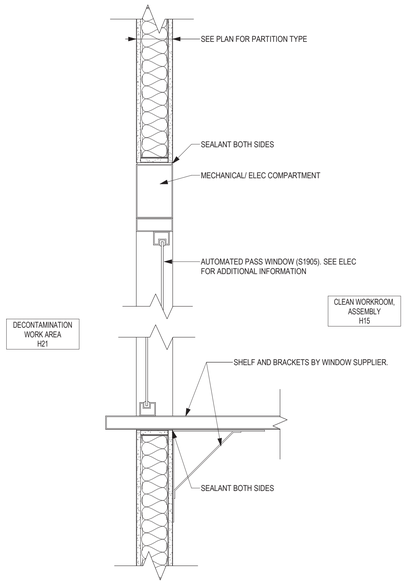

14 SECTION DETAIL - AUTOMATED PASS WINDOW
1 1/2" = 1'-0"

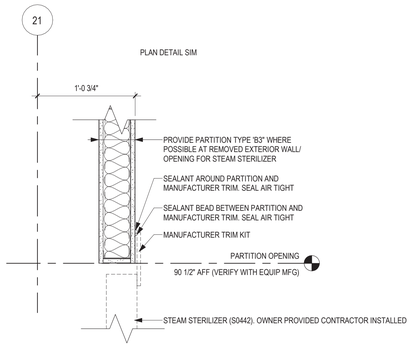

13 SECTION DETAIL - OPENING AT STEAM STERALIZER (TYP)
1 1/2" = 1'-0"

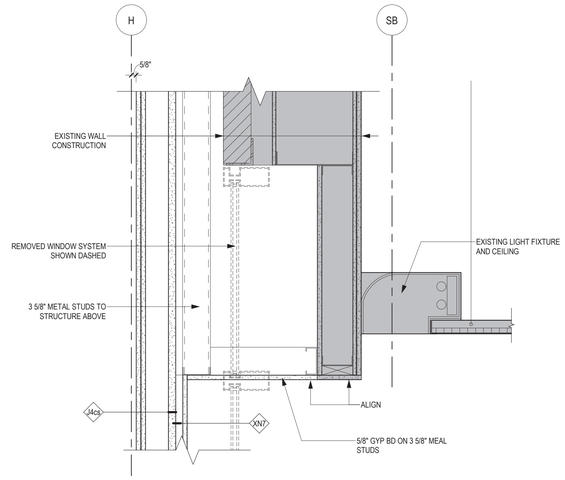

12 SECTION DETAIL - OPENING AT SURGERY / OR CORRIDOR
1 1/2" = 1'-0"

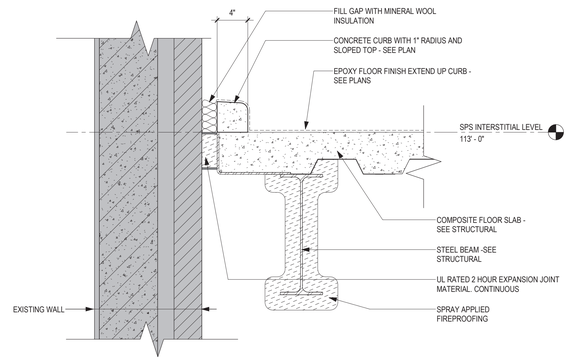

11 SECTION DETAIL - EXPANSION JOINT AT MECH ROOM (TYP)
1 1/2" = 1'-0"

Revisions:	Date:

CONSULTANT

IMEG

ARCHITECT/ENGINEER OF RECORD

ANDERSON

13605 1st Ave. N. #100 Plymouth, MN 55441
P 763.412.4000 | F 763.412.4090 | ae-mn.com
Anderson Engineering of Minnesota, LLC | Proj # 16584

STAMP

REGISTERED PROFESSIONAL ENGINEER — THOMAS A. OLESIAK — NORTH DAKOTA

DATE: 08/04/2022
License # 9335

Office of Construction and Facilities Management

VA U.S. Department of Veterans Affairs

Drawing Title: INTERIOR SECTION DETAILS

Approved:

Phase: BID DOCUMENTS

FULLY SPRINKLERED

Project Title: CONSTRUCT NEW SPS

Location: Sioux Falls, SD.

Issue Date: 08/04/2022

Checked: Checker

Drawn: Author

Project Number: 438-460

Building Number: 5

Drawing Number: AE550

VA FORM 08 - 6231

7/7/2023 1:28:27 PM

C:\Users\Public\Documents\Revit Projects\16584-R21_jbarfuel@ae-mn.com.rvt

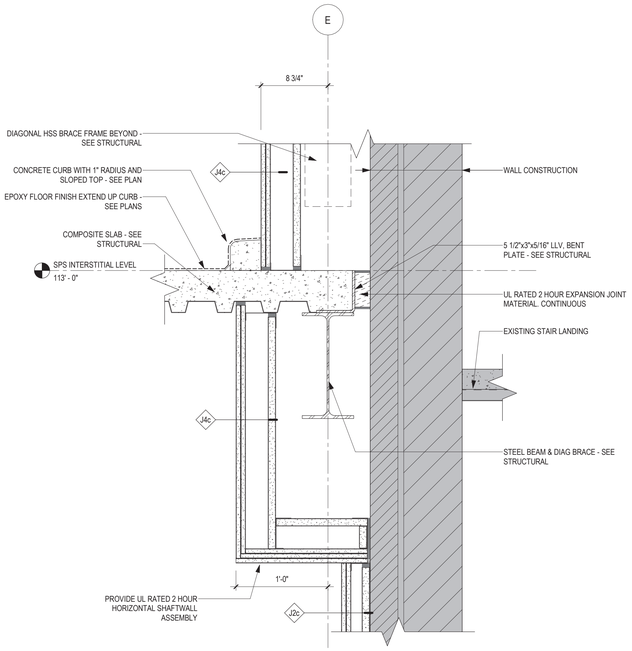

3 SECTION DETAIL - RATEED SOFFIT AT STEEL BEAM / BRACED FRAME
1 1/2" = 1'-0"

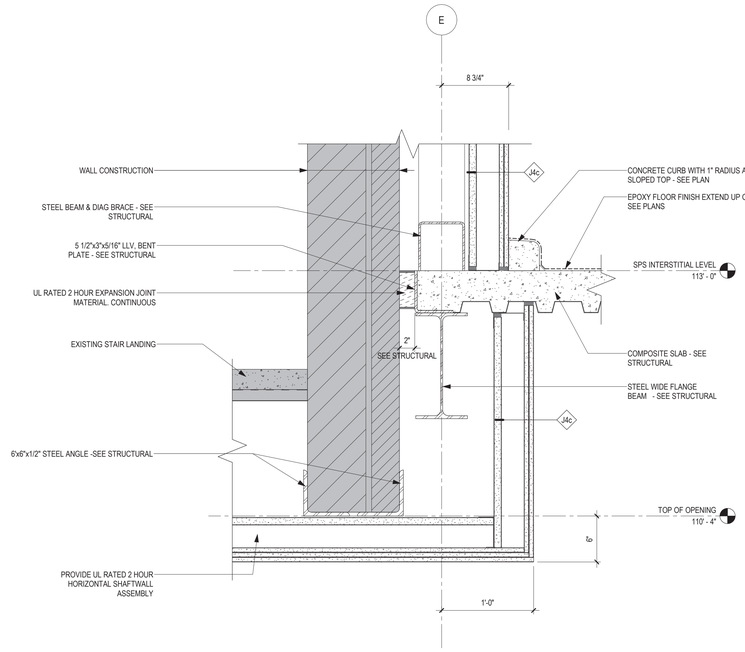

2 SECTION DETAIL - RATEED WALL AND SOFFIT AT EXISTING STAIR TOWER & BRACED FRAME
1 1/2" = 1'-0"

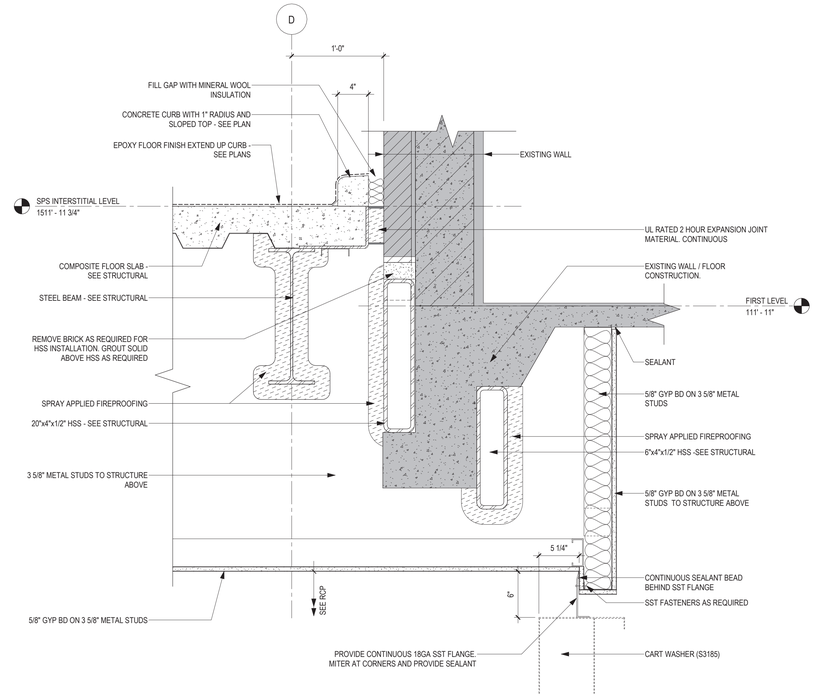

1 SECTION DETAIL - STEEL TUBE AND SOFFIT AT AUTOMATIC CART WASHER - H20B
1 1/2" = 1'-0"

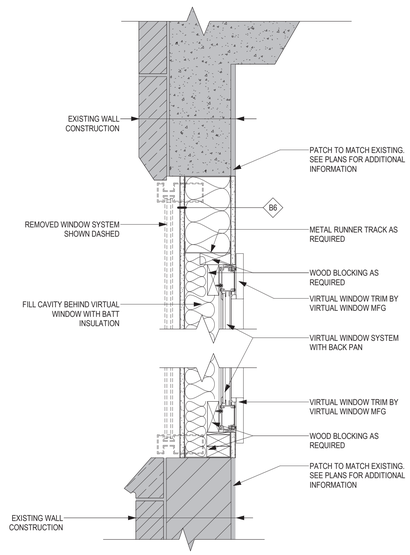

8 SECTION DETAIL - HEAD /SILL AT VIRTUAL WINDOW - FIRST LEVEL (TYP)
1 1/2" = 1'-0"

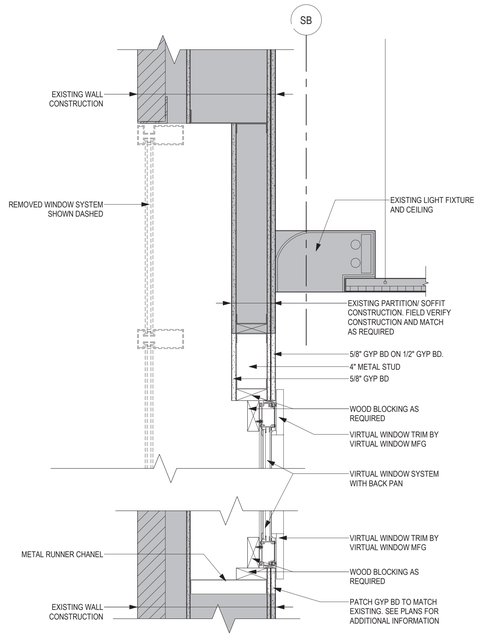

7 SECTION DETAIL - HEAD /SILL AT VIRTUAL WINDOW -SURGERY / OR CORRIDOR C43
1 1/2" = 1'-0"

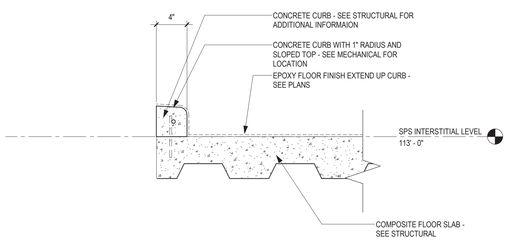

5 SECTION DETAIL - CONCRETE EQUIPMENT CURB
1 1/2" = 1'-0"

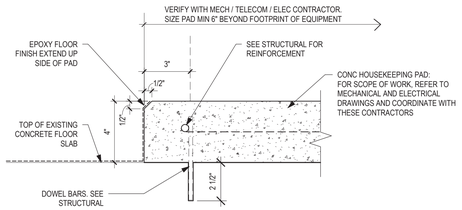

6 SECTION DETAIL - CONCRETE HOUSEKEEPING PAD
3" = 1'-0"

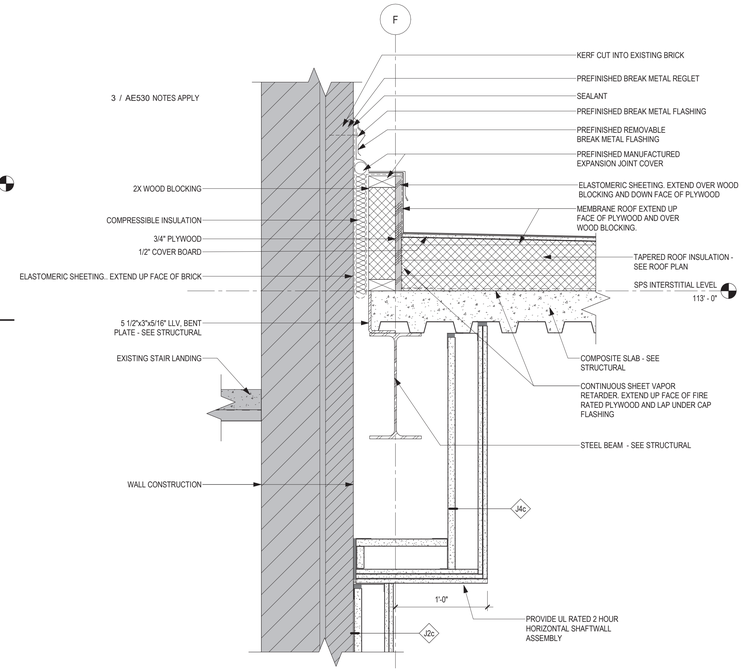

4 SECTION DETAIL - RATEED SOFFIT AT STEEL BEAM & ROOF EXPANSION JOINT
1 1/2" = 1'-0"

Revisions:	Date:

CONSULTANT

IMEG

ARCHITECT/ENGINEER OF RECORD

ANDERSON

13605 1st Ave. N. #100 Plymouth, MN 55441
P 763.412.4000 | F 763.412.4090 | ae-mn.com
Anderson Engineering of Minnesota, LLC | Proj # 16584

STAMP

REGISTERED PROFESSIONAL ENGINEER
REGISTERED ARCHITECT
THOMAS A. OLESIAK
DATE: 08/04/2022
License # 9335

Office of Construction and Facilities Management

VA U.S. Department of Veterans Affairs

Drawing Title: INTERIOR SECTION DETAILS

Approved:

Phase: BID DOCUMENTS

FULLY SPRINKLERED

Project Title: CONSTRUCT NEW SPS

Location: Sioux Falls, SD.

Issue Date: 08/04/2022 | Checked: Checker | Drawn: Author

Project Number: 438-460

Building Number: 5

Drawing Number: AE551

VA FORM 08 - 6231

7/7/2023 1:28:29 PM

C:\Users\Public\Documents\Revit Projects\16584-R21_jbarbari@ae-mn.com.rvt

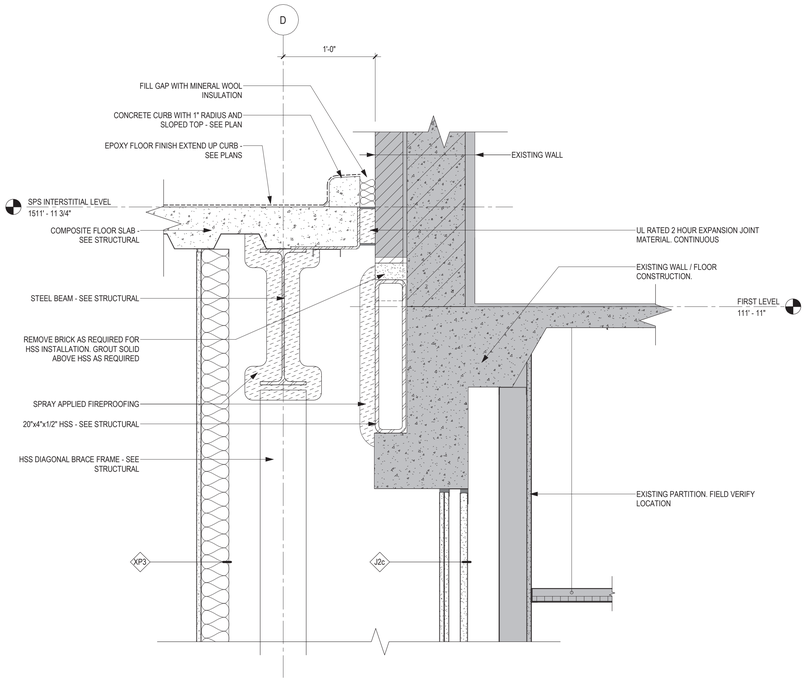

3 SECTION DETAIL - STEEL TUBE AND WINDOW INFILL -DR WORK ROOM D18

1 1/2" = 1'-0"

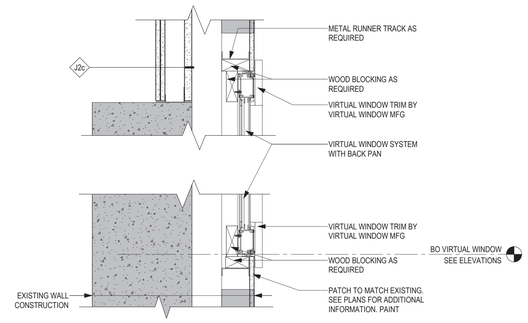

2 SECTION DETAIL - HEAD /SILL AT VIRTUAL WINDOW -DR WORK ROOM D18

1 1/2" = 1'-0"

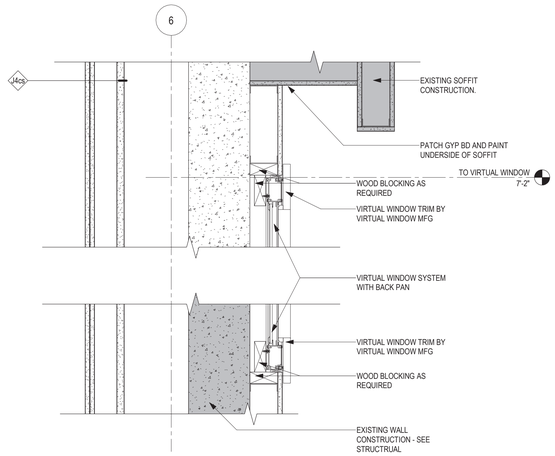

1 SECTION DETAIL - HEAD /SILL AT VIRTUAL WINDOW -ELEVATOR LOBBY G79-5

1 1/2" = 1'-0"

Revisions:	Date:

CONSULTANT

IMEG

ARCHITECT/ENGINEER OF RECORD

ANDERSON

13605 1st Ave. N. #100 Plymouth, MN 55441
P 763.412.4000 | F 763.412.4090 | ae-mn.com
Anderson Engineering of Minnesota, LLC | Proj # 16584

STAMP

REGISTERED PROFESSIONAL ARCHITECT
STATE OF SOUTH DAKOTA
9335
NICHOLAS A. OLESAK

DATE: 08/04/2022
License # 9335

Office of Construction and Facilities Management

VA U.S. Department of Veterans Affairs

Drawing Title: INTERIOR SECTION DETAILS

Approved:

Phase: BID DOCUMENTS

FULLY SPRINKLERED

Project Title: CONSTRUCT NEW SPS

Location: Sioux Falls, SD.

Issue Date: 08/04/2022

Checked: Checker

Drawn: Author

Project Number: 438-460

Building Number: 5

Drawing Number: AE552

VA FORM 08 - 6231

7/7/2023 1:28:31 PM

C:\Users\Public\Documents\Revit Projects\16584-R21_gbartusi@ae-mn.com.rvt

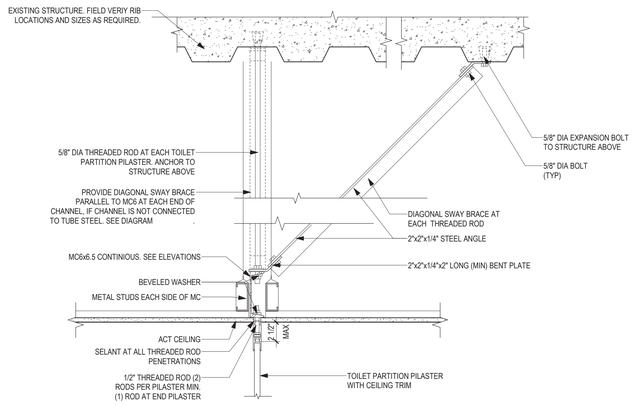

4 SECTION DETAIL - CEILING MOUNTED TOILET PARTITIONS
1 1/2" = 1'-0"

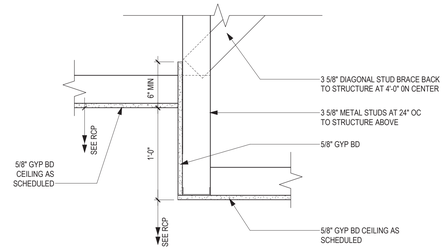

3 SECTION DETAIL - GYP BD TO GYP BD CEILING TRANSITION
1 1/2" = 1'-0"

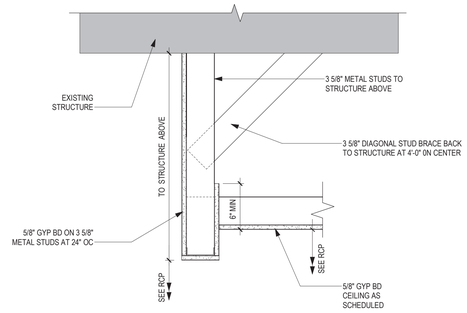

2 SECTION DETAIL - GYP BD RETURN
1 1/2" = 1'-0"

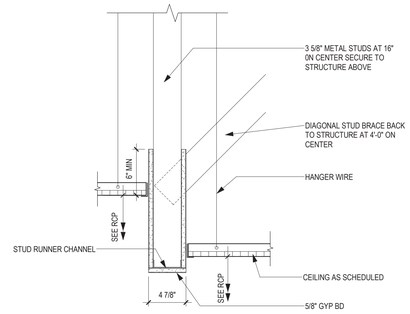

1 SECTION DETAIL - GYP BD BULKHEAD
1 1/2" = 1'-0"

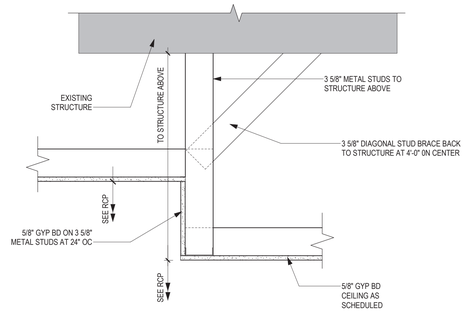

5 SECTION DETAIL - GYP BD CEILING TO GYP BD CEILIGNG
1 1/2" = 1'-0"

Revisions:	Date:

CONSULTANT

IMEG

ARCHITECT/ENGINEER OF RECORD

ANDERSON

13605 1st Ave. N. #100 Plymouth, MN 55441
P 763.412.4000 | F 763.412.4090 | ae-mn.com
Anderson Engineering of Minnesota, LLC | Proj # 16584

STAMP

REGISTERED PROFESSIONAL ARCHITECT — THOMAS A. OLESIAK — SOUTH DAKOTA

DATE: 08/04/2022
License # 9335

Office of Construction and Facilities Management

VA U.S. Department of Veterans Affairs

Drawing Title: CEILING DETAILS

Approved:

Phase: BID DOCUMENTS

FULLY SPRINKLERED

Project Title: CONSTRUCT NEW SPS

Location: Sioux Falls, SD.

Issue Date: 08/04/2022

Checked: Checker

Drawn: Author

Project Number: 438-460

Building Number: 5

Drawing Number: AE560

VA FORM 08 - 6231

7/7/2023 1:28:33 PM

C:\Users\Public\Documents\Revit Projects\16584-R21_gbarbar@ae-mn.com.rvt

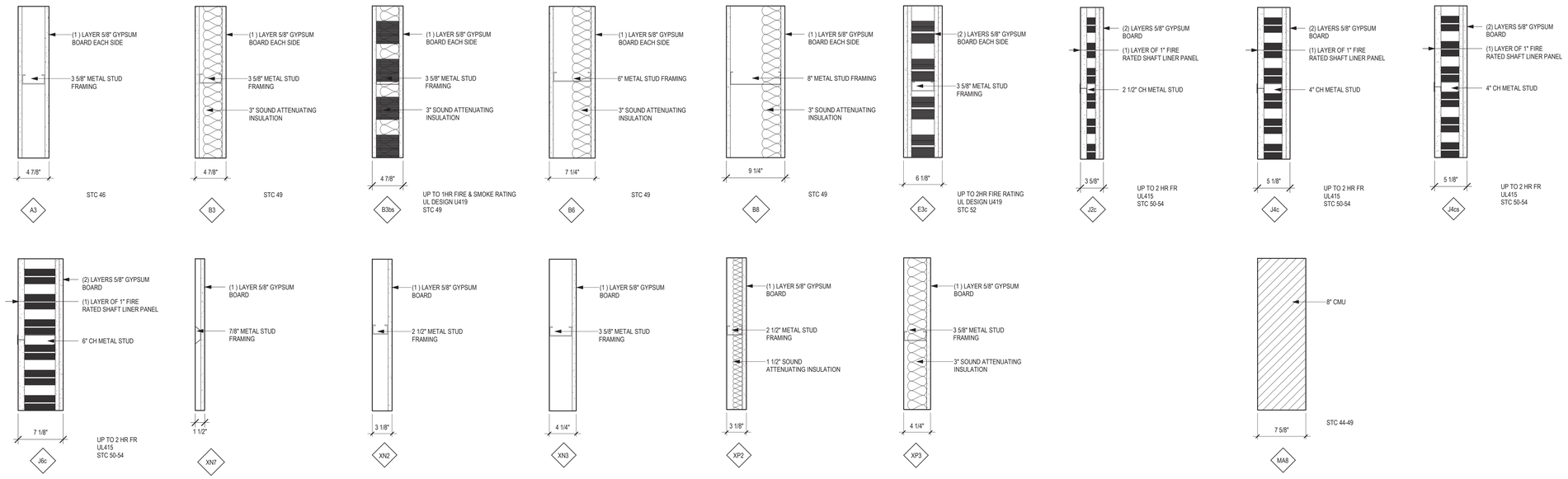

TYPES - PARTITION

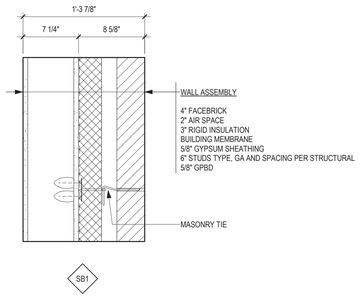

TYPES - WALL

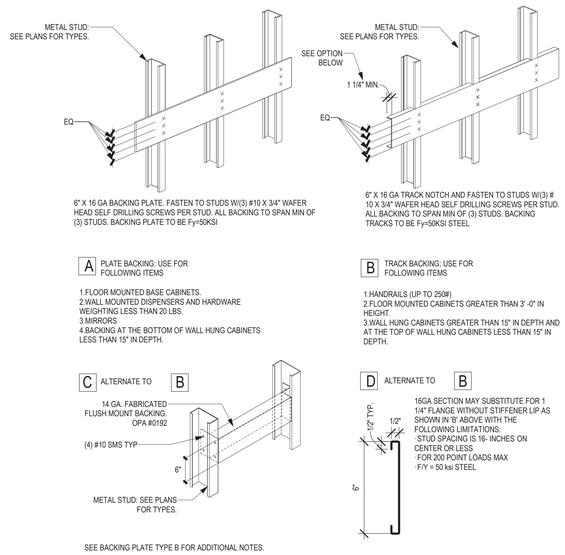

PARTITION BLOCKING-BACKING TYPES

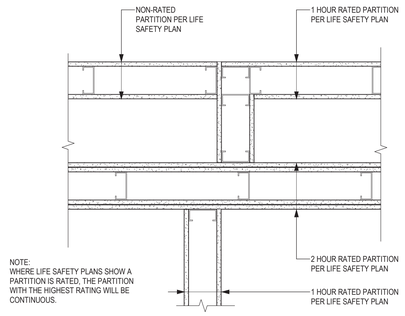

GUIDELINE - RATED WALL INTERSECTIONS

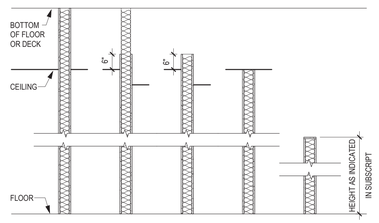

NO SUBSCRIPT	(D) SUBSCRIPT	(C) SUBSCRIPT	(U) SUBSCRIPT	(X'-X") SUBSCRIPT
EXTEND ENTIRE PARTITION TO UNDERSIDE OF STRUCTURE	EXTEND STUDS TO DECK, EXTEND GYPSUM BOARD TO 6" ABOVE HIGHEST ADJACENT CEILING	EXTEND ENTIRE PARTITION TO 6" ABOVE HIGHEST ADJACENT CEILING	EXTEND ENTIRE PARTITION TO UNDERSIDE OF CEILING	INDICATES FINISHED PARTITION HEIGHT

GENERAL NOTES:
1. FOR PARTITIONS WITH UNEQUAL LAYERS OF GYPSUM BOARD ON EACH SIDE, THE SIDE OF THE PARTITION WITH THE TAG INDICATES WHERE THE EXTRA LAYER(S) OF GYPSUM BOARD ARE TO BE INSTALLED. REFER TO PARTITION TYPES FOR MORE INFORMATION
2. DIMENSIONS TO METAL STUD PARTITIONS ARE MEASURED TO FINISH FACE UNLESS NOTED OTHERWISE
3. AT INFILL WITHIN OR EXTENSIONS ONTO EXISTING PARTITIONS, THE PARTITION TAG NOTED IS FOR INTENT ONLY. FINISHED PARTITION FACES ARE TO ALIGN WITH ADJACENT EXISTING PARTITION FACES
4. SUBSCRIPTS MAY BE USED WITH ANY PARTITION TYPE

PARTITION GENERAL NOTES:

1. SEE LIFE SAFETY PLANS FOR REQUIRED PARTITION FIRE RATINGS.

2. GYPSUM BOARD AND METAL STUDS USED IN FIRE RATED SEPARATION PARTITIONS SHALL EXTEND FROM FLOOR TO UNDERSIDE OF STRUCTURE, UNLESS NOTED OTHERWISE.

3. WHERE SMOKE PARTITIONS ARE REQUIRED BY LIFE SAFETY PLANS, THE FOLLOWING APPLIES TO ALL NON-ACOUSTICAL TYPE SMOKE PARTITIONS: EXTEND GYPSUM BOARD ON CORRIDOR SIDE TO STRUCTURE ABOVE. SEAL TOP AND BOTTOM OF PARTITION AND ALL PENETRATIONS THROUGH PARTITION ON CORRIDOR SIDE WITH A SMOKE SEALANT HAVING A MINIMUM WARM SMOKE TEMPERATURE OF 400 DEGREES FAHRENHEIT. ALL SEALS MUST HAVE PRE-APPROVAL OF CODE OFFICIAL. ROOM SIDE GYPSUM BOARD CAN EXTEND TO 6" ABOVE FINISHED CEILING.

4. CONTRACTORS TO VERIFY CONDITIONS ABOVE CEILING AT EXISTING PARTITIONS IDENTIFIED WITH FIRE/SMOKE PARTITION SYMBOLS. REPAIR CONDITIONS THAT DO NOT MEET REQUIREMENTS OF THE INDICATED FIRE/SMOKE RATING SHOWN, SUCH AS BUT NOT LIMITED TO OPENINGS IN PARTITIONS, GAPS AROUND DUCTWORK, PIPES AND CONDUIT, MISSING SMOKE DAMPERS, ETC

5. DIMENSIONS TO METAL STUD PARTITION ARE MEASURED TO FINISH FACE OF PARTITION UNLESS NOTED OTHERWISE

6. THE DIMENSION SHOWING THE LOCATION OF A DOOR FRAME IN GYPSUM BOARD WALLS IS TO THE INSIDE OF THE DOOR FRAME (DOOR OPENING). PROVIDE 4" TYPICAL DIMENSION IF NO DIMENSION IS SHOWN.

7. SOUND ATTENUATING INSULATION MEANS GLASS FIBER OR MINERAL WOOL BATTS OR BLANKETS BEARING THE UL LABEL FOR FIRE RESISTANCE. VERIFY TYPE AND DENSITY (PCF) WITH FIRE TEST NUMBER SHOWN ON PARTITION TYPE.

8. FOR PARTITION HEIGHTS SEE PARTITION TAG LEGEND AND TAG SUBSCRIPTS ON PLANS.

9. ALL FURRING TO BE PARTITION TYPE XP3, ALL PARTITIONS ARE TO BE PARTITION TYPE B3, UNLESS NOTED OTHERWISE.

10. FOR PARTITION TYPES WITH GYPSUM BOARD ON ONE SIDE ONLY, INSTALL GYPSUM BOARD ON ROOM SIDE, UNLESS NOTED OR DETAILED OTHERWISE. FOR SHAFTWALL PARTITION TYPES, INSTALL LINER PANEL ON NON-ACCESSIBLE SIDE, UNLESS NOTED OR DETAILED OTHERWISE.

11. PROVIDE 1/2" DEFLECTION SPACE AT THE TOP OF STUDS AT ALL PARTITIONS EXTENDING TO STRUCTURE, UNLESS NOTED OTHERWISE.

12. WHEN GYPSUM BOARD PARTITIONS ARE LOCATED BELOW STRUCTURE THAT HAS A VERTICAL DEFLECTION MOVEMENT MORE THAN 1/2", PROVIDE PARTITION HEADS WITH VERTICAL MOVEMENT CAPABILITY TO MATCH THAT DEGREE OF MOVEMENT. MAINTAIN THE REQUIRED FIRE RATING OF FIRE RATED PARTITIONS FROM FLOOR TO STRUCTURE ABOVE WITH FIRE TESTED HEAD CONSTRUCTION.

13. WHEN PARTITION FRAMING RUNS HIGHER THAN 12'-0" ABOVE FINISH FLOOR, BRACE PARTITION BACK TO STRUCTURE ABOVE WITH METAL STUDS EVERY 4'-0" ON CENTER MINIMUM.

14. BULKHEAD FRAMING SHALL EXTEND TO UNDERSIDE OF STRUCTURE WITH DIAGONAL STUD FRAMING BRACES AT 4'-0" ON CENTER (2 BRACES MINIMUM) WITH GYPSUM BOARD EXTENDING 6" ABOVE CEILING MINIMUM, UNLESS NOTED OTHERWISE.

15. GENERAL CONTRACTOR SHALL PROVIDE AND COORDINATE ALL IN-WALL BLOCKING FOR WALL MOUNTED CASEWORK AND EQUIPMENT SUPPLIED BY THIS CONTRACT, OWNER FURNISHED OR BY VENDORS. CONTRACTORS OPTION TO PROVIDE 3/4" FIRE TREATED PLYWOOD OR SHEET METAL BLOCKING FOR WALL MOUNTED EQUIPMENT, CASEWORK, DOOR STOPS, ACCESSORIES, ETC, UNLESS NOTED OTHERWISE.

16. IN WET AREAS SUCH AS BUT NOT LIMITED TO SHOWER, TUB, GLASS WASHING ROOMS, SOILED UTILITY ROOMS, JANITOR CLOSETS, COMMERCIAL FOOD PROCESSING ROOMS, ETC, USE TILE BACKER BOARD BEHIND THE CERAMIC TILE AND EXTEND TO 2'-0" BEYOND ALL SIDES OF THE PLUMBING FIXTURE. IN DOUBLE LAYER WALLS WHERE THE TILE BACKER BOARD IS INSTALLED OVER A BASE LAYER OF GYPSUM BOARD, APPLY A WATER BARRIER (BUILDING WRAP) NOT A VAPOR RETARDER. OVER THE BASE LAYER OF GYPSUM BOARD. IN HIGH HUMIDITY AREAS SUCH AS SAUNAS, STEAM ROOMS AND SWIMMING POOLS, WHERE WALLS ARE EXPOSED TO CONSTANT MOISTURE, USE TILE BACKER BOARD BEHIND CERAMIC TILE.

17. IN WET AREAS SUCH AS SOILED UTILITY ROOMS, JANITOR CLOSETS, ETC, USE 5/8" WATER RESISTANT GYPSUM BOARD OR 5/8" FR WATER RESISTANT GYPSUM BOARD.

18. FOR ALL REMODELING PROJECTS, ALL PARTITIONS NOTED AT INFILLS WITHIN, OR EXTENSIONS ONTO EXISTING PARTITIONS, ARE NOTED AS SUCH FOR INTENT ONLY. ALL EXPOSED PARTITION FACES ARE TO ALIGN.

Revisions:	Date:

CONSULTANT

IMEG

ARCHITECT/ENGINEER OF RECORD

ANDERSON

13605 1st Ave. N. #100 Plymouth, MN 55441
P 763.412.4000 | F 763.412.4090 | ae-mn.com
Anderson Engineering of Minnesota, LLC | Proj # 16584

STAMP

REGISTERED PROFESSIONAL ENGINEER THOMAS A. OLESAK SOUTH DAKOTA

DATE: 08/04/2022
License # 9335

Office of Construction and Facilities Management

VA U.S. Department of Veterans Affairs

Drawing Title: INTERIOR PARTITION TYPES AND DETAILS

Approved:

Phase: BID DOCUMENTS

FULLY SPRINKLERED

Project Title: CONSTRUCT NEW SPS

Location: Sioux Falls, SD.

Issue Date: 08/04/2022

Checked: Checker

Drawn: Author

Project Number: 438-460

Building Number: 5

Drawing Number: AE601

VA FORM 08 - 6231

7/7/2023 1:28:35 PM

C:\Users\Public\Documents\Revit Projects\16584-R21_gbatbat@ae-mn.com.rvt

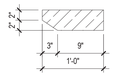

3 CAST STONE- ACCENT
1" = 1'-0"

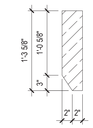

2 CAST STONE- HEADER
1" = 1'-0"

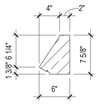

5 CAST STONE- SILL
1" = 1'-0"

4 CAST STONE- JAMB
1" = 1'-0"

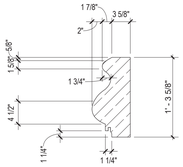

6 CAST STONE- DRIP EDGE BAND
1" = 1'-0"

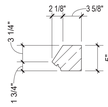

7 CAST STONE- SMALL BAND
1" = 1'-0"

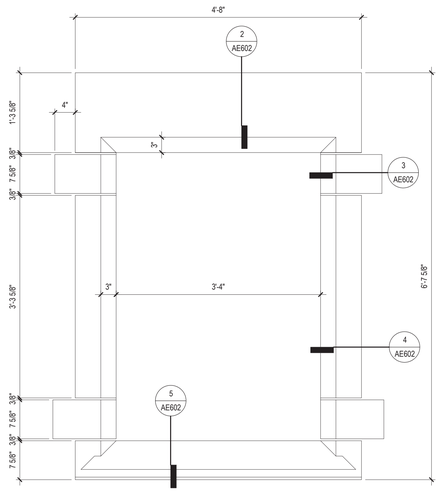

1 CAST STONE WINDOW TRIM DETAIL
1" = 1'-0"

OPENING SCHEDULE

ASSOCIATED ROOMS		OPENING			PANEL INFORMATION			FRAME INFORMATION							
FROM ROOM NAME	TO ROOM NAME	NUMBER	WIDTH	HEIGHT	PANEL TYPE	2ND PANEL TYPE	PANEL GLAZING	FRAME TYPE	FRAME GLAZING	ROW GROUP	FIRE LABEL (MIN)	GASKET	ELECTRICAL	S LABEL	COMMENTS
	INTERSTITIAL SPACE	134	6'-0"	7'-0"	HM-F	HM-F	NONE	HMM-1	NONE	SH-3.1					INSULATED, BLAST RESISTNAT
STEAM STERILIZER	CLEAN WORKROOM, ASSEMBLY	A15A	3'-6"	7'-0"	FRP-F		NONE	FRPS-1	NONE	HW-2					
CORRIDOR	CORRIDOR	C50D	4'-0"	7'-0"	WD-NV		MG-1	HMS-1	NONE	SH-3		Y	Y		CARD READER, CLOSER
CORRIDOR	STERILE INSTRUMENT STORAGE	C51A	6'-0"	7'-0"	WD-NV	WD-NV	MG-1	HMS-1	NONE	SH-3	Y	Y	Y		POWER OPERATED, CARD READER. INTERCONNECT TO DOOR C51B
CORRIDOR		C51B	6'-0"	7'-0"	WD-NV	WD-NV	FG-1	HMS_DE-1	NONE	SH-3.2	90	Y	Y	Y	POWER OPERATED, CARD READER. INTERCONNECT TO DOOR C51A
CORRIDOR	CORRIDOR	C51C	4'-0"	7'-0"	WD-GH		MG-1	HMS-1	NONE	SH-3		Y	Y		CARD READER, CLOSER
CORRIDOR		C52A	4'-0"	7'-0"	HM-F		NONE	HMM-1	NONE	SH-3		Y	Y		BLAST RESISTANT, INSULATED, CARD READER, CLOSER
CORRIDOR	CORRIDOR	C52B	4'-0"	7'-0"	WD-F		NONE	HMS-1	NONE	SH-3	90	Y	Y	Y	
TELECOM	CORRIDOR	H1	3'-6"	7'-0"	WD-F		NONE	HMS-1	NONE	SH-3	45	Y	Y	Y	CARD READER, CLOSER
CORRIDOR	CONFERENCE/ TRAINING ROOM	H2	3'-6"	7'-0"	WD-NV		MG-1	HMS-1	NONE	HW-2					
CORRIDOR	ELECTRICAL	H3	3'-6"	7'-0"	WD-F		NONE	HMS-1	NONE	HW-4					CLOSER
CORRIDOR	OPEN OFFICE	H4	3'-6"	7'-0"	WD-NV		MG-1	HMS-1	NONE	HW-3					
CORRIDOR	LEAD TECH OFFICE	H5	3'-6"	7'-0"	WD-F		NONE	HMS-1	NONE	HW-3					
CORRIDOR	HAC	H6	3'-6"	7'-0"	WD-F		NONE	HMS-1	NONE	HW-4					
CORRIDOR	TOILET	H7	3'-6"	7'-0"	WD-F		NONE	HMS-1	NONE	HW-2.1					
CORRIDOR	STAFF LOUNGE	H8	3'-6"	7'-0"	WD-GH		MG-1	HMS-1	NONE	HW-10					
CORRIDOR	RME OFFICE	H9	3'-6"	7'-0"	WD-F		NONE	HMS-1	NONE	HW-3					
CORRIDOR	ASSISTANT CHIEF OFFICE	H10	3'-6"	7'-0"	WD-F		NONE	HMS-1	NONE	HW-3					
CORRIDOR	SPS CHIEF OFFICE	H11	3'-6"	7'-0"	WD-F		NONE	HMS-1	NONE	HW-3					
CORRIDOR	MENS TOILET/LOCKER	H12	3'-6"	7'-0"	WD-F		NONE	HMS-1	NONE	HW-10					
MENS TOILET/LOCKER	MENS SHOWER	H12A	3'-6"	7'-0"	WD-F		NONE	HMS-1	NONE	HW-2					
CORRIDOR	WOMENS TOILET/LOCKER	H13	3'-6"	7'-0"	WD-F		NONE	HMS-1	NONE	HW-10					
WOMENS TOILET/LOCKER	WOMENS SHOWER	H13A	3'-6"	7'-0"	WD-F		NONE	HMS-1	NONE	HW-2					
CORRIDOR	ANTE-ROOM CLEAN	H14A	4'-0"	7'-0"	FRP-GH		MG-1	FRPS-1	NONE	SH-3		Y	Y		CARD READER, CLOSER
ANTE-ROOM CLEAN	CLEAN WORKROOM, ASSEMBLY	H14B	4'-0"	7'-0"	FRP-GH		MG-1	FRPS-1	NONE	HW-2		Y			
CLEAN WORKROOM, ASSEMBLY	STERILE INSTRUMENT STORAGE	H15	4'-0"	7'-0"	FRP-GH		MG-1	FRPS-1	NONE	HW-2			Y		POWER OPERATED
CLEAN WORKROOM, ASSEMBLY	CLEAN HAC	H16	3'-6"	7'-0"	FRP-F		NONE	FRPS-1	NONE	HW-5					
CORRIDOR	LOGISTICS STORAGE ROOM	H18	3'-6"	7'-0"	WD-F		NONE	HMS-1	NONE	SH-3					
STEAM STERILIZATION AREA	SCOPE STAGING ROOM	H19	3'-6"	7'-0"	WD-F		NONE	HMS-1	NONE	HW-2.1					
CART HOLDING	SCOPE STAGING ROOM	H20	4'-0"	7'-0"	FRP-GH		MG-1	FRPS-1	NONE	HW-2.1					
MANUAL CART WASH	DECONTAMINATION WORK AREA	H20AA	4'-0"	7'-0"	FRP-GH		MG-1	FRPS-1	NONE	HW-2					
MANUAL CART WASH	CART HOLDING	H20AB	4'-0"	7'-0"	FRP-GH		MG-1	FRPS-1	NONE	HW-2.1					
DECONTAMINATION WORK AREA	SOILED HAC	H22	3'-6"	7'-0"	FRP-F		NONE	FRPS-1	NONE	HW-5					
CORRIDOR	DETERGENT	H23	3'-6"	7'-0"	FRP-F		NONE	FRPS-1	NONE	HW-5					
CORRIDOR	CART HOLDING	H24A	4'-0"	7'-0"	FRP-GH		MG-1	FRPS-1	NONE	HW-2.2					
CART HOLDING	DECONTAMINATION WORK AREA	H24B	4'-0"	7'-0"	FRP-GH		MG-1	FRPS-1	NONE	HW-2			Y		POWER OPERATED
CORRIDOR	ANTEROOM, SOILED TRANSITION/DROP-OFF	H25A	3'-6"	7'-0"	FRP-GH		MG-1	FRPS-1	NONE	HW-2.2					
ANTEROOM, SOILED TRANSITION/DROP-OFF	DECONTAMINATION WORK AREA	H25B	3'-6"	7'-0"	FRP-GH		MG-1	FRPS-1	NONE	HW-2			Y		POWER OPERATED
DECONTAMINATION WORK AREA	SCOPE PROCESSING DECONTAMINATION ROOM	H26A	4'-0"	7'-0"	FRP-GH		MG-1	FRPS-1	NONE	HW-2			Y		POWER OPERATED
	SCOPE PROCESSING DECONTAMINATION ROOM	H26B	3'-0"	7'-0"	FRP-GH		MG-1	FRPS-1	NONE	HW-2			Y		POWER OPERATED

DOOR PANEL NAMING

NOTE: ACTUAL PANELS MAY VARY FROM DESCRIPTIONS BELOW, REFER TO PANEL TYPE ELEVATIONS

HM-GF

PANEL PREFIXES

AL- ALUMINUM
CG- COILING GRILLE
CS- COILING SLATS
FRP- FIBERGLASS REINFORCED
HM- HOLLOW METAL
OS- OVERHEAD SECTIONAL
RD3- REVOLVING DOOR 3 PANEL
RD4- REVOLVING DOOR 4 PANEL
VL- VERTICAL LIFT
WD- WOOD

PANEL SUFFIXES

AG ALL GLASS
BF BIFOLD
BFGBIFOLD GLASS
D DUTCH
DG DUTCH GLASS
DSDUTCH W/SHELF
F FLUSH
G2GLASS 2 LIGHT
G3GLASS 3 LIGHT
GFGLASS FULL
GH GLASS HALF
LF LOUVER FULL
LGHLOUVER GLASS HALF
LHLOUVER HALF
LNV LOUVER NARROW VISION
NVNARROW VISION
NV2 NARROW VISION 2 LIGHT
NV3 NARROW VISION 3 LIGHT
NVCNARROW VISION CENTERED
RP2 RAISED PANEL 2 PANEL
RP4 RAISED PANEL 4 PANEL
RP6 RAISED PANEL 6 PANEL
RP8 RAISED PANEL 8 PANEL
VVISION
W WINDOWS (1 ROW)
WT WINDOWS THROUGHOUT

DOOR FRAME NAMING

NOTE: ACTUAL FRAMES MAY VARY FROM DESCRIPTIONS BELOW, REFER TO FRAME TYPE ELEVATIONS

HMS-2

FRAME PREFIXES

AL- ALUMINUM
AL-BL- ALUMINUM BORROWED LIGHT
AL-SL- ALUMINUM SLIDING
ALR- ALUMINUM REVOLVING
CW## CURTAINWALL
FRP - FIBERGLASS REINFORCED
HMM- HOLLOW METAL MASONRY
HMM-BL- HMM BORROWED LIGHT
HMM-DE- HMM DOUBLE EGRESS
HMS- HOLLOW METAL STUD
HMS-BL- HMS BORROWED LIGHT
HMS-DE- HMS DOUBLE EGRESS
OC- OVERHEAD COILING
OS- OVERHEAD SECTIONAL
VL- VERTICAL LIFT
WD- WOOD
WD-BL- WOOD BORROWED LIGHT
WDP- WOOD POCKET

FRAME SUFFIXES

0 FRAMED-CASED OPENING
1 DOOR ONLY
2 SIDELIGHT(S) 1 SIDE
3 SIDELIGHT(S) 1 SIDE W/HORIZONTAL
4 SIDELIGHT(S) BOTH SIDES
5 SIDELIGHT(S) BOTH SIDES W/HORIZONTAL
6 DOOR W/TRANSOM
7 DOOR W/TRANSOM W/SIDELIGHT(S) 1 SIDE
8 TRANSOM W/SIDELIGHT(S) 1 SIDE W/HORIZONTAL
9 TRANSOM W/SIDELIGHT(S) BOTH SIDES
10 TRANSOM W/SIDELIGHT(S) BOTH SIDES W/HORIZONTAL
11 FULL WIDTH TRANSOM W/SIDELIGHT(S) 1 SIDE
1X1 1 LIGHT WIDE AND 1 LIGHT HIGH
2X2 2 LIGHTS WIDE AND 2 LIGHTS HIGH
3X3 3 LIGHTS WIDE AND 3 LIGHTS HIGH
(NOTE: OTHER COMBINATIONS POSSIBLE)
OX FIXED PANEL, ACTIVE PANEL
OXO FIXED PANEL, ACTIVE PANEL, FIXED PANEL
OXX FIXED, ACTIVE, ACTIVE
OXXO FIXED, ACTIVE, ACTIVE, FIXED
OXXXXO FIXED, ACTIVE, ACTIVE, ACTIVE, ACTIVE, FIXED

NOTE:
1. FOR PARTITION THICKNESS SEE PLANS AND PARTITION TYPES
2. SEE FRAME PROFILE INFORMATION.
3. FRP DOOR FRAME SIM

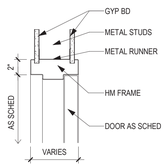

9 HM DOOR FRAME IN METAL STUD PARTITION - HEAD
1 1/2" = 1'-0"

NOTE:
1. FOR PARTITION THICKNESS SEE PLANS AND PARTITION TYPES
2. SEE FRAME PROFILE INFORMATION.
3. FRP DOOR FRAME SIM

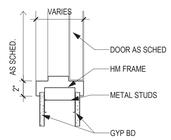

8 HM DOOR FRAME IN METAL STUD PARTITION - JAMB
1 1/2" = 1'-0"

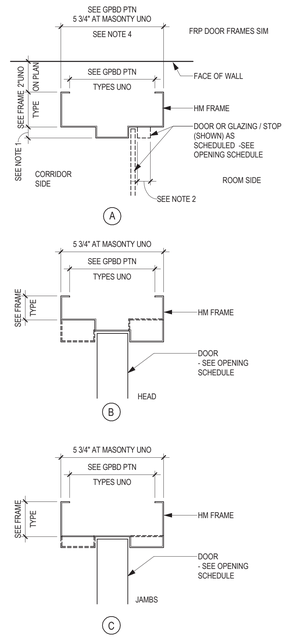

10 HM FRAME PROFIELS
3" = 1'-0"

FRAME PROFILE NOTES:

1. 5/8" AT 20 MINUTE FIRE RATED FRAMES AND NON-RATED FRAMES, 3/4" AT FIRE RATED FRAMES OF 45 MINUTES AND ABOVE.
2. 5/8" AT 20 MINUTE FIRE RATED FRAMES AND NON-RATED FRAMES, 1" AT FIRE RATED FRAMES OF 45 MINUTES AND ABOVE.
3. FOR FRAMES IN GPBD PARTITIONS, VERIFY THAT THE FRAME THROAT DEPTH MATCHES THE PARTITION THICKNESS.
4. 5 3/4" AT MASONRY OR DEEP GPBD WALL RECESSES WHERE FRAME DOES NOT WRAP THE WALL.

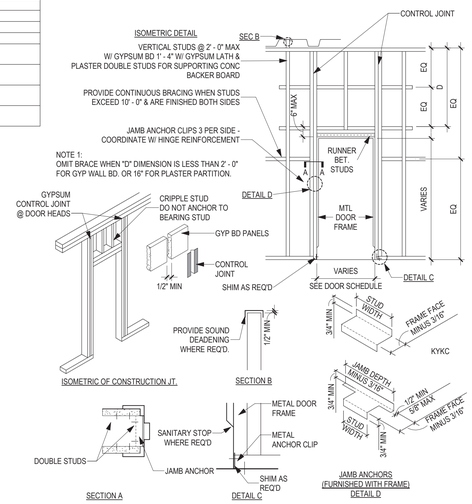

ISOMETRIC DETAIL
ISOMETRIC OF CONSTRUCTION JT.
SECTION A
SECTION B
DETAIL C
DETAIL D
JAMB ANCHORS (FURNISHED WITH FRAME)

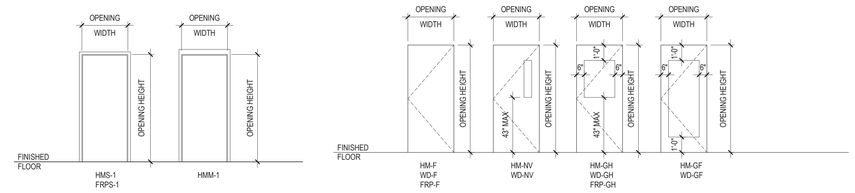

TYPES - FRAMES

TYPES - PANELS

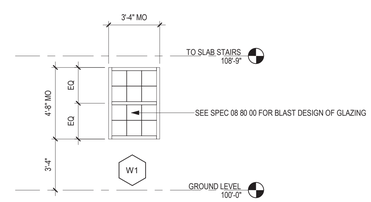

EXTERIOR WINDOW - TYPES
1/4" = 1'-0"

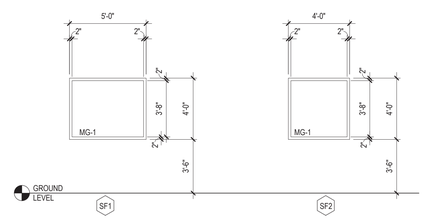

INTERIOR WINDOW - TYPES

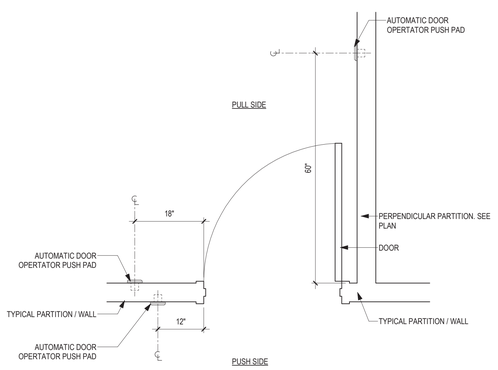

AUTOMATIC DOOR OPERATOR (ADO) CLEARANCES
3/4" = 1'-0"

Revisions:	Date:

CONSULTANT: IMEG

ARCHITECT/ENGINEER OF RECORD: ANDERSON
13605 1st Ave. N. #100 Plymouth, MN 55441
P 763.412.4000 | F 763.412.4090 | ae-mn.com
Anderson Engineering of Minnesota, LLC | Proj # 16584

STAMP: DATE: 08/04/2022 License # 9335

Office of Construction and Facilities Management
VA U.S. Department of Veterans Affairs

Drawing Title: DOOR SCHEDULE AND ELEVATIONS, CAST STONE PROFILES AND WINDOW TYPES
Approved:
Phase: BID DOCUMENTS
FULLY SPRINKLERED
Project Title: CONSTRUCT NEW SPS
Location: Sioux Falls, SD.
Issue Date: 08/04/2022
Checked: Checker
Drawn: Author
Project Number: 438-460
Building Number: 5
Drawing Number: AE602

VA FORM 08 - 6231

7/7/2023 1:28:39 PM
C:\Users\Public\Documents\Revit Projects\16584-R21_gbarbar@ae-mn.com.rvt

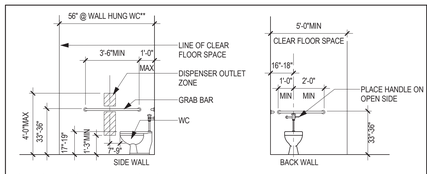

ACCESSIBLE TOILET/WATER CLOSETS

1. SANITARY NAPKIN DISPOSAL. PROVIDE AT UNISEX, & WOMEN'S PATIENT BATHROOMS ONLY.
2. DISPENSERS MAY NOT BE LOCATED BEHIND GRAB BARS.

* AT TOILET COMPARTMENTS
** AT TOILET COMPARTMENTS AND SINGLE OCCUPANCY

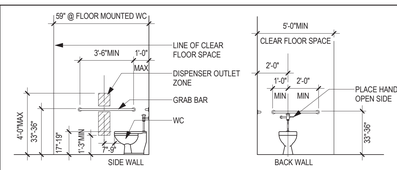

ACCESSIBLE BARIATRIC TOILET/WATER CLOSETS

1. SANITARY NAPKIN DISPOSAL. PROVIDE AT UNISEX, & WOMEN'S PATIENT BATHROOMS ONLY.
2. DISPENSERS MAY NOT BE LOCATED BEHIND GRAB BARS.

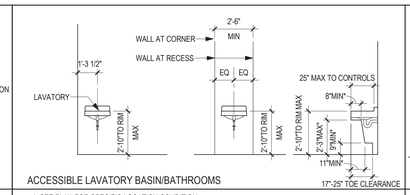

ACCESSIBLE LAVATORY BASIN/BATHROOMS

1. SEE PLAN FOR SPECIFIC LOCATION CONDITION
2. SDISD & PTC - VC
3. * KNEE CLEARANCE
4. SEE ACCESSIBLE MIRROR AT LAV FOR ADDITIONAL INFORMATION

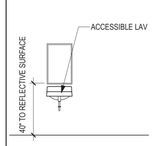

ACCESSIBLE MIRROR

1. SEE INTERIOR ELEVATIONS FOR MIRROR SIZE

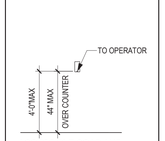

ACCESSIBLE SOAP AND HAND SANITIZER DISPENSER

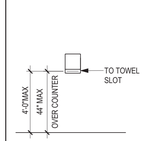

ACCESSIBLE PTD

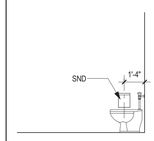

SANITARY NAPKIN DISPOSAL

1. SANITARY NAPKIN DISPOSAL. PROVIDE AT UNISEX, & WOMEN'S PATIENT BATHROOMS ONLY.

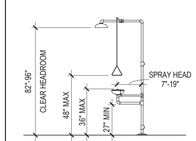

EMERGENCY SHOWER/EYEWASH

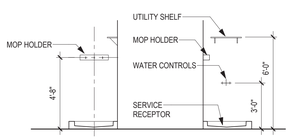

HOUSEKEEPING/EVS CLOSET

1. UTILITY SHELF 24" LONG UNO
2. WATER CONTROLS AND SERVICE RECEPTOR - SEE MECHANICAL

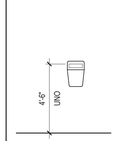

SHARPS CONTAINER

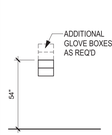

GLOVE BOX

2 GLOVE BOXES SHOWN. REFER TO ELEV FOR REQ'D QTY. ADDITIONAL BOXES MOUNTED ABOVE 4'-6"/1370mm.

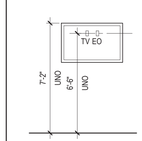

FLAT TV SCREEN/ MONITORS

PROVIDE PARTITION BLOCKING

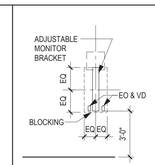

PC MOUNTING BRACKET

ADJUSTABLE VERTICAL SLIDE MONITOR BRACKET

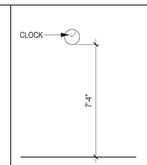

WALL CLOCK

-SEE ELECTRICAL DRAWINGS

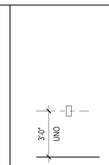

CARD READER

- SEE ELECTRICAL AND COMMUNICATION DRAWINGS

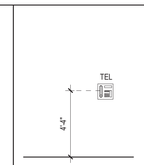

WALL PHONE

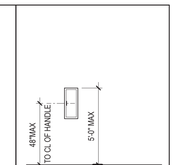

FIRE EXTINGUISHER CABINET (FEC)

TYPICAL MOUNTING HEIGHTS

Revisions:	Date:

CONSULTANT

IMEG

ARCHITECT/ENGINEER OF RECORD

ANDERSON

13605 1st Ave. N. #100 Plymouth, MN 55441
P 763.412.4000 | F 763.412.4090 | ae-mn.com
Anderson Engineering of Minnesota, LLC | Proj # 16584

STAMP

REGISTERED PROFESSIONAL ARCHITECT
STATE OF SOUTH DAKOTA
8335
JONATHAN A. OLESAK

DATE: 08/04/2022
License # 9335

Office of Construction and Facilities Management

VA U.S. Department of Veterans Affairs

Drawing Title: MOUNTING HEIGHTS

Approved:

Phase: BID DOCUMENTS

FULLY SPRINKLERED

Project Title: CONSTRUCT NEW SPS

Location: Sioux Falls, SD.

Issue Date: 08/04/2022

Checked: Checker

Drawn: Author

Project Number: 438-460

Building Number: 5

Drawing Number: AE640

VA FORM 08 - 6231

C:\Users\Public\Documents\Revit Projects\16584-R21_gbartusiel@ae-mn.com.rvt

7/7/2023 1:28:40 PM