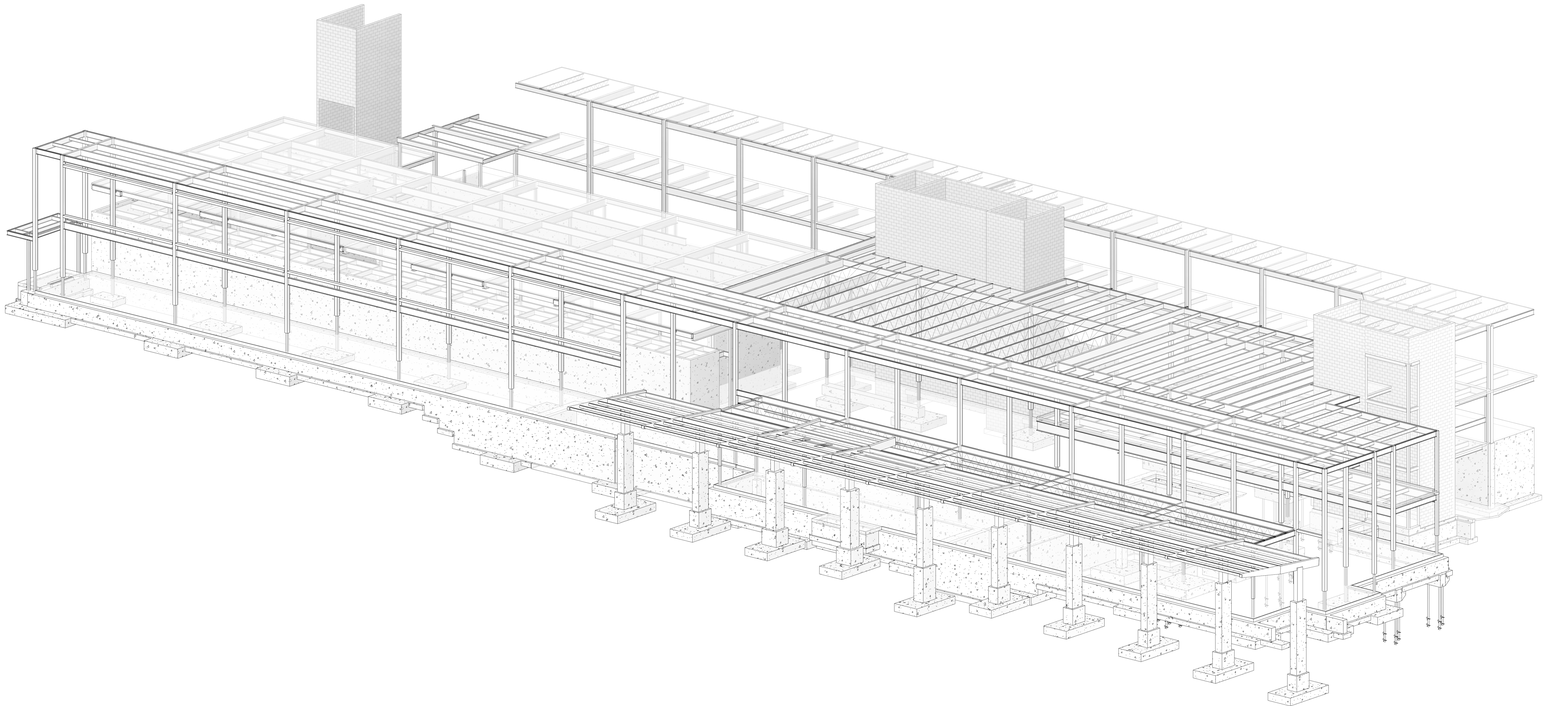

## STRUCTURAL SHEET INDEX

- ● INDICATES DRAWINGS ARE BEING ISSUED
- ●S INDICATES DRAWINGS ARE BEING ISSUED AND SIGNED FOR THE FIRST TIME
- ▲ INDICATES DRAWINGS ARE BEING ISSUED ON SMALL SHEETS OR WRITE UP
- R INDICATES DRAWINGS ARE BEING ISSUED FOR REFERENCE ONLY (NOT FOR CONSTRUCTION)

| SHEET # | ISSUE: ISSUED FOR CONSTRUCTION 06/22/2022 | SHEET TITLE |
|---|---|---|
| SI001 | ●S | STRUCTURAL COVER SHEET |
| SI002 | ●S | GENERAL STRUCTURAL NOTES |
| SD101 | ●S | STRUCTURAL DEMOLITION PLANS - AREA B |
| SB001 | ●S | TYPICAL DETAILS - FOUNDATION |
| SB100 | ●S | OVERALL FOUNDATION PLAN |
| SB101 | ●S | GROUND LEVEL FOUNDATION PLAN - AREA A |
| SB102 | ●S | GROUND LEVEL FOUNDATION PLAN - AREA B |
| SB401 | ●S | TUNNEL PART PLAN |
| SB501 | ●S | FOUNDATION DETAILS |
| SB502 | ●S | FOUNDATION DETAILS |
| SB601 | ●S | FOUNDATION SCHEDULES |
| SF001 | ●S | TYPICAL DETAILS - STEEL CONNECTION |
| SF003 | ●S | TYPICAL DETAILS - STEEL COMPOSITE |
| SF004 | ●S | TYPICAL DETAILS - STEEL JOIST |
| SF100 | ●S | OVERALL FIRST FLOOR AND LOW ROOF FRAMING PLAN |
| SF101 | ●S | LOW FRAMING PLAN - AREA A |
| SF102 | ●S | FIRST FLOOR AND LOW ROOF FRAMING PLAN - AREA B |
| SF110 | ●S | OVERALL HIGH ROOF FRAMING PLAN |
| SF111 | ●S | ROOF FRAMING PLAN - AREA A |
| SF112 | ●S | ROOF FRAMING PLAN - AREA B |
| SF401 | ●S | ENLARGED FRAMING PLAN AND DETAILS |
| SF402 | ●S | CANOPY FRAMING DETAILS |
| SF403 | ●S | BUS SHELTER ENLARGED FRAMING PLAN AND DETAILS |
| SF501 | ●S | FRAMING DETAILS |
| SF502 | ●S | FRAMING DETAILS |
| SF503 | ●S | FRAMING DETAILS |
| SF504 | ●S | FRAMING DETAILS |
| SF601 | ●S | COLUMN SCHEDULE |

## TYPICAL MARKS

| | | |
|---|---|---|
| BP# | = | BASE PLATE |
| BRP# | = | BEARING PLATE |
| B# OR B#-### | = | CONCRETE BEAM |
| CC# | = | CONCRETE COLUMN |
| CCB# | = | CONCRETE COUPLING BEAM |
| J# OR J#-### | = | CONCRETE JOIST |
| CP# | = | CONCRETE PIER |
| DP# | = | DRILLED PIER |
| DPC# | = | DRILLED PIER CAP |
| EP# | = | EMBED PLATE |
| GB# | = | GRADE BEAM |
| F# | = | ISOLATED FOOTING |
| L - M# OR L - S# | = | LINTEL |
| MP# | = | MASONRY PIER |
| PF# | = | PILE FOUNDATIONS |
| PB# | = | POST-TENSION BEAM |
| PC# | = | PRECAST COLUMN |
| RWF# | = | RETAINING WALL FOOTING |
| SC# | = | STEEL COLUMN |
| SH# | = | STEEL HANGER |
| SP# | = | STEEL POST |
| SR# | = | SPECIAL CMU REINFORCEMENT |
| WF# | = | WALL FOOTING |

## STRUCTURAL ABBREVIATIONS

| | |
|---|---|
| ADD | ADDENDUM |
| ADDL | ADDITIONAL |
| ALT | ALTERNATE |
| ANCH | ANCHOR (ANCHORAGE) |
| ARCH | ARCHITECT, ARCHITECTURAL |
| @ | AT |
| BSMT | BASEMENT |
| BM | BEAM |
| BRG | BEARING |
| BTWN | BETWEEN |
| BLK | BLOCK |
| BB | BOND BEAM |
| BOT.BO,B/ | BOTTOM |
| BFE | BOTTOM FOOTING ELEVATION |
| BLKG | BLOCKING |
| BLDG | BUILDING |
| CANT | CANTILEVER |
| CIP | CAST IN PLACE |
| CLG | CEILING |
| CTR | CENTER |
| CL | CENTERLINE |
| CLR | CLEAR |
| COL | COLUMN |
| COMP | COMPOSITE |
| CONC | CONCRETE |
| CMU | CONCRETE MASONRY UNIT |
| CONN | CONNECTION(S) |
| CONST | CONSTRUCTION |
| CONST JT | CONSTRUCTION JOINT |
| CONT | CONTINUOUS |
| db | REINFORCING BAR DIAMETER |
| DBL | DOUBLE |
| DEFL | DEFLECTION |
| DEG | DEGREES |
| DL | DEAD LOAD |
| D, d | DEPTH |
| DET | DETAIL |
| DIAG | DIAGONAL |
| DIA | DIAMETER |
| DIM | DIMENSION |
| DWL(S) | DOWEL(S) |
| DN | DOWN |
| DWG | DRAWING |
| EA | EACH |
| EF | EACH FACE |
| ELEC | ELECTRICAL |
| ENGR | ENGINEER |
| EL | ELEVATION |
| ELEV | ELEVATOR |
| EOD | EDGE OF DECK |
| EOR | ENGINEER OF RECORD |
| EOS | EDGE OF SLAB |
| EQ | EQUAL |
| EQUIP | EQUIPMENT |
| ERECT | ERECTION |
| EW | EACH WAY |
| EXIST, (E) | EXISTING |
| EXP | EXPANSION |
| EXT | EXTERIOR |
| FD | FLOOR DRAIN |
| FDN/FND | FOUNDATION |
| FL/FLR | FLOOR |
| FRMG | FRAMING |
| FS | FAR SIDE |
| FT | FOOT (FEET) |
| FTG | FOOTING |
| GALV | GALVANIZED |
| GA | GAGE |
| GC | GENERAL CONTRACTOR |
| GB | GRADE BEAM |
| HD | HEADED |
| HDR | HEADER |
| HK | HOOK |
| HT | HEIGHT |
| HS | HIGH STRENGTH |
| HSS | HOLLOW STRUCTURAL TUBE |
| HORIZ | HORIZONTAL |
| ID | INSIDE DIAMETER |
| IF | INSIDE FACE |
| IN | INCH(S) |
| INFO | INFORMATION |
| INT | INTERIOR |
| JT OR JNT | JOINT |
| JST | JOIST |
| JBE | JOIST BEARING ELEVATION |
| JSD | JOIST SEAT DEPTH |
| K | KIP (1,000 POUNDS) |
| K/FT | KIPS PER FOOT |
| KLF | KIPS PER LINEAL FOOT |
| K/SF | KIPS PER SQUARE FOOT |
| L | ANGLE |
| LB | POUND |
| LG | LENGTH, LONG |
| LL | LIVE LOAD |
| LOC | LOCATION |
| LONG | LONGITUDINAL |
| LLH | LONG LEG HORIZONTAL |
| LLV | LONG LEG VERTICAL |
| LWT | LIGHT WEIGHT |
| MAX | MAXIMUM |
| MCJ | MASONRY CONTROL JOINT |
| MEP / MECH | MECHANICAL, ELECTRICAL, PLUMBING |
| MEZZ | MEZZANINE |
| MFR | MANUFACTURER |
| MIN | MINIMUM |
| MISC | MISCELLANEOUS |
| MO | MASONRY OPENING |
| MTL | METAL |
| (N) | NEW |
| NEC | NECESSARY |
| NO | NUMBER |
| NOM | NOMINAL |
| NS | NEAR SIDE |
| NIC | NOT IN CONTRACT |
| NTS | NOT TO SCALE |
| NWT | NORMAL WEIGHT |
| OC | ON CENTER |
| OPNG | OPENING |
| OD | OUTSIDE DIAMETER |
| OF | OUTSIDE FACE |
| / | PER |
| PC | PRECAST |
| PERP | PERPENDICULAR |
| PL | PLATE |
| PROJ | PROJECTION |
| PSF | POUNDS PER SQUARE FOOT |
| PSI | POUNDS PER SQUARE INCH |
| PT | POST-TENSIONED |
| PVC | POLYVINYL CHLORIDE |
| R | RADIUS |
| REF | REFERENCE |
| REINF | REINFORCEMENT |
| REQD | REQUIRED |
| REV | REVERSE/REVISION |
| RD | ROOF DRAIN |
| RO | ROUGH OPENING |
| SCHED | SCHEDULE |
| SECT | SECTION |
| SHT | SHEET |
| SIM | SIMILAR |
| SIP | STRUCTURAL INSULATED PANEL |
| SJI | STEEL JOIST INSTITUTE |
| SOG | SLAB ON GRADE |
| SPA | SPACES |
| SPEC | SPECIFICATIONS |
| SQ | SQUARE |
| STD | STANDARD |
| STL | STEEL |
| STIFF | STIFFENER |
| STIR | STIRRUPS |
| STRUCT | STRUCTURAL |
| TBE | TOP OF BEAM ELEVATION |
| TDE | TOP OF DECK ELEVATION |
| TEMP | TEMPORARY |
| TEMP STL | TEMPERATURE STEEL |
| TFE | TOP OF FOOTING ELEVATION |
| THK | THICK |
| T & B | TOP AND BOTTOM |
| TO, T/ | TOP OF |
| TOS | TOP OF STEEL |
| TOSL | TOP OF SLAB |
| TRANSV | TRANSVERSE |
| TWE | TOP OF WALL ELEVATION |
| TYP | TYPICAL |
| UNO | UNLESS NOTED OTHERWISE |
| VERT | VERTICAL |
| VIF | VERIFY IN FIELD |
| W, w | WIDTH |
| W/ | WITH |
| W/O | WITH OUT |
| WP | WORK POINT |
| WT | WEIGHT |
| WWF | WELDED WIRE FABRIC |

## FOUNDATION PLAN LEGEND

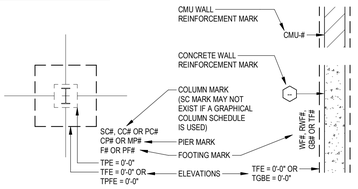


## STEEL BEAM FRAMING PLAN LEGEND

FORCE MARKS:
V - INDICATES FACTORED VERTICAL SHEAR FORCE IN KIPS (SEE PLAN / SCHEDULE)
M - INDICATES FACTORED END MOMENT FORCE IN KIP-FEET (SEE PLAN / SCHEDULE)
P - INDICATES FACTORED END AXIAL FORCE IN KIPS (FORCES ARE FULLY REVERSIBLE UNO)
H - INDICATES FACTORED HORIZONTAL SHEAR FORCE IN KIPS, PERPENDICULAR TO BEAM AXIS
T - INDICATES TORSIONAL MOMENT FORCE IN KIP-FEET

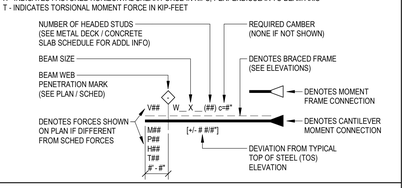


## STEEL JOIST / JOIST GIRDER FRAMING PLAN LEGEND

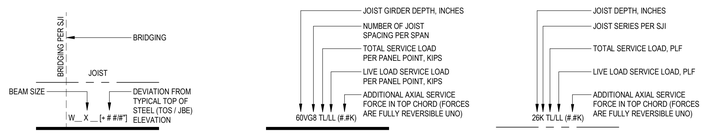


## TYPICAL SYMBOLS

- FOR ADDL SYMBOLS SEE PLAN LEGENDS.

| | | | |
|---|---|---|---|
| S — S | STEP FOOTING | | ELEVATION |
| GRID | NEW GRID | | LINTEL |
| GRID | EXISTING GRID | D- | METAL DECK & DECK SPAN |
| | MATCHLINE | CS- | COMPOSITE SLAB & DECK SPAN |
| | SLAB RECESS | | SPAN DIRECTION |
| | SLAB JOINT | | EXISTING |
| STAIR 1 | OPENING | | EXTENT ARROW |
| -- | WALL REINFORCEMENT | | AXIAL CONNECTION |
| -- | SHEAR WALL REINFORCEMENT | | BOTTOM FLANGE BRACING |
| NORTH | NORTH ARROW | | REVISION |
| | | | BEAM WEB PENETRATION MARK |

| Revision # | Description | Date: |
|---|---|---|
| | | |

## CONSULTANTS

| ARCHITECTURAL: | STRUCTURAL: | MEP: | CIVIL: | LANDSCAPE: |
|---|---|---|---|---|
| BWBR | ERA STRUCTURAL ENGINEERING | DUNHAM | EVS | CONFLUENCE |
| 380 St. Peter St<br>Suite 600<br>St. Paul, MN 55102<br>Phone: 651-222-3701 | **Ericksen Roed & Associates**<br>2550 University Ave W<br>Suite 423-S<br>St. Paul, MN 55114<br>Phone: 651-251-7570 | **Dunham Associates, Inc.**<br>50 South Sixth St<br>Suite 1100<br>Minneapolis, MN 55402<br>Phone: 612-465-7550 | **EVS**<br>10025 Valley View Rd<br>Suite 140<br>Eden Prairie, MN 55344<br>Phone: 952-646-0236 | **CONFLUENCE**<br>524 N Main Ave<br>Suite 201<br>Sioux Falls, SD 57104<br>Phone: 605-339-1205 |

## ARCHITECT OF RECORD

**A/E:**
**Stone Group Architects**
**600 E 7th Street**
**Sioux Falls, SD 57103**
**605-271-1144**

STONE GROUP ARCHITECTS

**STAMP**

REGISTERED PROFESSIONAL ENGINEER — REG. NO. 4750 — MICHAEL A. DOSITTO — SOUTH DAKOTA — 06/22/2022

Office of Construction and Facilities Management

VA U.S. Department of Veterans Affairs

| | | | |
|---|---|---|---|
| **Drawing Title** STRUCTURAL COVER SHEET | **Phase** CONSTRUCTION DOCUMENTS | **Project Title** NEW FRONT LOBBY AND PRIMARY CARE ADDITION | **Project Number** VA #438-480 ERA #2020-361 |
| | | | **Building Number** 5 |
| **Approved:** | FOR OFFICIAL USE ONLY | **Location** SIOUX FALLS, SOUTH DAKOTA | **Drawing Number** SI001 |
| | | **Issue Date** 06/22/2022 · **Checked** SJC · **Drawn** IDB | |

VA FORM 08 - 6231

C:_Revit_Local_Short Term\Local\20-361_520_SF_VA Lobby_bevingtonERA.rvt

6/21/2022 4:16:32 PM

GENERAL STRUCTURAL NOTES

These notes supplement the Specifications. Refer to the Specifications for additional requirements.

1. DESIGN CRITERIA:

1.1. BUILDING CODES USED FOR DESIGN:

1.1.1. IBC 2018.
1.1.2 Physical Security and Resiliency Design Manual, 2020

1.2. STRUCTURAL TESTS AND SPECIAL INSPECTIONS:

1.2.1. Special inspections shall be performed by an independent testing agency according to IBC Chapter 17.

Section 1705.2 and Table 1705.2.3 - Steel Construction
Table 1705.3 - Concrete Construction
Table 1705.6 - Soils
Table 1705.3 - Post-installed Anchors
Table 1705.9 - Helical Pier Foundations

1.2.2. Qualifications of special inspectors and frequency of tests and inspections shall be as defined in CASE 962C - Guideline for International Building Code-Mandated Special Inspections and Tests and Quality Assurance.

1.2.3. The Engineer will provide periodic observation to assure conformance with design intent of the construction documents. These observations are not meant to fulfill the requirements of special inspections.

1.2.4. Special inspections of the following items are not within the scope of the structural drawings. Contact the Architect or design professionals with these responsibilities for information about these items.

Sprayed Fire-resistant Materials
Mastic and Intumescent Fire-resistant Coatings
EIFS
Smoke Control

1.3. FUTURE CONSTRUCTION:

1.3.1. VERTICAL: None.

1.3.2. HORIZONTAL: A future expansion is planned east of grid G in Zone A. The expansion planned to extend approximately 75' to the East located between grids 1-6.8. Steel beams located near column mid-height have been designed to support future gravity loads and lateral loads.

1.4. DESIGN LOADS:

1.4.1. Risk Category:

From IBC Table 1604.5

Risk Category . . . . . IV

1.4.2. DESIGN LIVE LOADS:

Public Areas . . . . . 100 PSF
Interstitial/Mechanical . . . . . 150 PSF
Framing above Mechanical . . . . . 15 PSF
Corridors and Stairs . . . . . 100 PSF

1.4.3. WIND LOAD:

Ultimate Design Wind Speed: . . . 125 MPH
Exposure Classification: . . . . . B
Internal Pressure Coeff: . . . . . +0.18
. . . . . -0.18
Wind pressures used for the design of exterior components and cladding shall be calculated by a professional engineer registered in the state where the project is located. Calculations shall be submitted for review.

1.4.4. SNOW LOAD:

Ground Snow Load: . . . . . 40 PSF
Flat Roof Snow Load: . . . . . 34 PSF
Snow Exposure Factor: . . . . . 1.0
Snow Load Importance Factor: . . . 1.2
Roof Thermal Factor: . . . . . 1.0
Roof Slope Factor: . . . . . 1.0

1.4.5. SEISMIC LOADS:

Importance Factor: . . . . . 1.0
Seismic Design Category: . . . . . A
Site Class: . . . . . D
Mapped Spectral Response Coefficients
SS: . . . . . 0.091 g
S1: . . . . . 0.035 g
Design Spectral Response Coefficients
SDS: . . . . . 0.097 g
SD1: . . . . . 0.057 g

1.5. DEFLECTION AND DRIFT

1.5.1. Horizontal framing members are designed for deflections as tabulated. Deflections of horizontal to horizontal framing members are additive. Subcontractors shall make allowance for installation and operation of their systems to accommodate these deflections.

TYPICAL FRAMING MEMBERS
Roof Live Load . . . . . span/360
Floor Live + Superimposed Dead Load . . . . span/480
Construction Load . . . . . span/180

FRAMING MEMBER SUPPORTING EXTERIOR WALL
Ext wall + live + superimposed dead load . . span/600
(3/8" max)

1.5.2. Story drifting criteria:

Wind: . . . . . H/400
Seismic: . . . . . 0.020 hx

2. DESIGN STRENGTHS:

2.1. CONCRETE:

2.1.1. All concrete shall be stone aggregate unless noted. See Specifications for additional durability requirements.

2.1.2. Minimum concrete 28-day compressive strength shall be as follows:

| Class | f'c (PSI) | Type | Add'l Remarks | Location |
|---|---|---|---|---|
| A | 4000 | NWT | | Interior Slabs and Walls |
| B | 4500 | NWT, Air | Note 1 | Exterior Slabs and Walls |

Note 1: Limit Water to Cement Ratio to 0.45

2.2. CONCRETE REINFORCEMENT:

| | | | |
|---|---|---|---|
| Deformed Bars: | FY = | 60 KSI | ASTM A615 |
| Weldable Deformed Bars: | FY = | 60 KSI | ASTM A706 |
| Welded Wire Fabric: | FY = | 70 KSI | ASTM A185 |

2.3. STRUCTURAL STEEL:

| | | | |
|---|---|---|---|
| Wide Flange Sections: | FY = | 50 KSI | ASTM A992 |
| Rect. Hollow Structural Shapes: | FY = | 50 KSI | ASTM A500 C |
| Round Hollow Structural Shapes: | FY = | 46 KSI | ASTM A500 C |
| Solid Column Sections: | FY = | 36 KSI | ASTM A36 |
| Other Shapes or Plates | FY = | 36 KSI | ASTM A36 |
| Bolts: | | | ASTM A325/A490 |
| Headed Studs: | Fu = | 65 KSI | ASTM A108 |
| Anchor Rods: | FY = | 36 KSI | ASTM F1554 |
| Welding Electrodes: | FY = | 70 KSI | E70XX |
| Non-Shrink Grout: | | f'c = 8,000 PSI | ASTM C1107 |

2.4. STEEL DECK:

| | | | |
|---|---|---|---|
| Roof Deck: | FY = | 33 KSI | ASTM A653 |
| Composite Deck: | FY = | 50 KSI | ASTM A653 |

2.5. COLD-FORMED STEEL: See ASTM A1003.

54 mil (16 Gage) and Heavier: FY = 50 KSI
43 mil (18 Gage) and Lighter: FY = 33 KSI

2.6. STRUCTURE EXPOSED TO WEATHER:

2.6.1. All structural steel and embed plates exposed to weather or located in parking areas shall be hot-dip galvanized unless noted otherwise.

2.6.2. Field welds shall be touched up with 2 coats of zinc rich paint.

3. FOUNDATIONS AND EARTHWORK:

3.1. SOILS AND FOUNDATION ENGINEERING REPORT:

3.1.1. Reference the project's geotechnical report prepared by GeoTek, number 20-M50, dated January 15, 2021, for additional information and requirements.

3.1.2. This report is for informational purposes only and shall not be considered part of the contract documents. Furthermore, no warranty is made by the owner with regard to the completeness and accuracy of the subsurface investigation data, soil test data, statements and interpretations given in the report.

3.2. GROUND WATER:

3.2.1. Water levels indicated on the boring logs are subject to seasonal and/or annual variations. If necessary, a dewatering system of sufficient capacity shall be installed and operated to maintain the construction area free of water at all times.

3.3. EXCAVATIONS:

3.3.1. Should any questionable conditions be encountered during excavation, notify Owner's Representative immediately.

3.3.2. No engineered fill shall be placed until excavation bottoms have been inspected and approved by the Geotechnical Engineer.

3.3.3. Water shall not be permitted to accumulate in footing excavations.

3.3.4. Provide a minimum of 6 inches of granular fill below all interior slabs-on-grade.

3.3.5. The slab-on-grade design is based on a modulus of subgrade reaction of 100 PCI.

3.4. FOOTINGS:

3.4.1. The foundation design is based on a total load net soil pressure of:
Spread Footings 2000 PSF
Wall Footings 2000 PSF

3.4.2. Foundations are assumed to be supported on native material or properly compacted structural fill. All footing excavations shall be inspected, prior to concrete placement, by the Geotechnical Engineer to verify suitable bearing material of capacity as specified.

3.4.3. Notify the Owner's representative when additional excavation is required to reach suitable bearing material.

3.4.4. Footing steps shall be located generally where indicated on the plan, and shall be installed as detailed.

3.4.5. Bottom of exterior building footings surrounding heated areas are to be at least 48 inches below final outside grade unless dimensioned otherwise. Bottom of exterior building footings at stoops or other unheated areas are to be at least 60 inches below final outside grade unless dimensioned otherwise.

3.4.6. Contractor shall provide frost protection for all footings when footings may be exposed to freezing conditions. Frost protection may include insulating blankets or at least 60 inches of soil above the bottom of footing.

3.4.7. All continuous footings shall be centered under walls unless dimensioned otherwise.

3.5. NON-FROST SUSCEPTIBLE FILL

3.5.1. Where non-frost susceptible fill is required, fill should consist of clean, open graded crushed stone. See the geotechnical report for additional requirements.

3.5.2. Non-frost susceptible fill shall extend below the freeze zone.

3.6. RETAINING WALLS:

3.6.1. Unrestrained retaining wall design is based on an active equivalent fluid pressure of 35 PCF. See the Geotechnical Report and the backfilling section below for backfill materials and procedures.

3.6.2. Restrained retaining wall design is based on an at-rest equivalent fluid pressure of 50 PCF. See the Geotechnical Report and the backfilling section below for backfill materials and procedures.

3.6.3. The allowable passive pressure is based on an equivalent fluid pressure of 220 PCF.

3.6.4. The coefficient of friction due to sliding is 0.23 (includes a factor of safety of 2).

3.7. BACKFILLING:

3.7.1. No backfilling and compacting of earth shall be permitted against retaining walls until walls and footings have reached 100% of their design strength, or unless adequate bracing is provided. Bracing must be reviewed by the Engineer.

3.7.2. No backfilling and compacting of earth shall be permitted against basement or other foundation walls until all slabs that support the wall against lateral earth pressure have been poured and have reached 75% of their design strength, or unless adequate bracing is provided. Bracing must be reviewed by the Engineer.

3.7.3. Material used for backfill shall be free draining engineered backfill unless noted otherwise. See the Geotechnical Report for additional information.

3.7.4. Both sides of foundation walls shall be backfilled simultaneously so as to prevent overturning or lateral movement of walls. All grade beams shall be adequately braced to prevent lateral movement during backfilling and compaction.

3.7.5. No fill or backfill shall be settled by the use of water.

3.8. FOUNDATION COMPLETION:

3.8.1. The Geotechnical Engineer shall certify in writing that all foundations were placed and completed as specified.

3.9. HELICAL PILES

3.9.1. The foundation design is based on a net helical pier capacity of 20 tons.

3.9.2. The Contractor shall submit a letter, signed and stamped by a professional engineer registered in the State where the project is located, verifying the capacity of the selected helical pier and approving the installation procedure.

3.9.3. Tolerance of helical piers shall not exceed 3" in any direction.

3.10. SHEET PILING AND EARTH RETENTION SYSTEMS:

3.10.1. Sheet piling and earth retention systems shall be designed by the Contractor. Design calculations and drawings shall be submitted for review for conformance to the drawings and construction sequences before installation. See Specifications.

4. CONCRETE:

4.1. REFERENCES:

ACI 315 ACI Detailing Manual
ACI 318 Building Code Requirements for Reinforced Concrete
CRSI MSP Manual of Standard Practice
AWS D1.4 Structural Welding Code - Reinforcing Steel
CRSI Recommended Practice for Placing Reinforcing Bars
PCI Design Handbook: Precast and Prestressed Concrete

4.2. REINFORCING STEEL:

4.2.1. The reinforcing steel Contractor shall fabricate all reinforcement and furnish all accessories, chairs, spacer bars and supports necessary to secure the reinforcement unless shown otherwise on the plans and/or details.

4.2.2. Concrete reinforcement shall be placed according to ACI and CRSI "Recommended Practice for Placing Reinforcing Bars".

4.2.3. Minimum Clear Cover For Concrete Reinforcement:

Pile Caps . . . . . 6" Bottom
Footings . . . . . 2" Sides, 3" Bottom, 2" Top
Piers . . . . . 2" to Ties
Foundation Walls
Exterior Face . . . . . 2"
Interior Face . . . . . 2" Against Soil
Interior Face . . . . . 1" at Basement
Columns . . . . . 1 1/2" to Ties
Structural Slabs . . . . . 1" Top and Bottom
Slabs on Grade . . . . . Center of Slab

4.2.4. See typical detail for required bar development lengths and lap splice lengths.

4.2.5. All welded wire fabric shall have one full space plus 2" at splices and wire together.

4.2.6. Continuous top and bottom bars in walls, beams, and grade beams shall be spliced as follows:

1. Top bars - at mid-span
2. Bottom bars - over supports.

4.2.7. No welding of reinforcement shall be permitted unless specifically called for or reviewed by the Structural Engineer. Where welding is permitted, all welding of reinforcing bars shall conform to: "Structural Welding Code - Reinforcing Steel". A chemical analysis of the reinforcing bars to be welded shall be submitted for review.

4.3. ANCHORING TO CONCRETE

4.3.1. Headed studs shall be Nelson H4L or S3L with Fu = 65 ksi, or approved equal, unless noted otherwise.

4.3.2. Deformed bar anchors shall be Nelson D2L with FY = 70 ksi or approved equal, unless noted otherwise.

4.3.3. Post-installed anchors shall be installed by qualified personnel in accordance with the Manufacturer's Printed Installation Instructions.

4.3.4. Expansion anchors shall not be loaded until concrete has achieved a minimum age of 7 days. Adhesive anchors shall not be loaded until concrete achieved a minimum age of 21 days.

4.3.5. Expansion anchors shall be Hilti Kwik Bolt TZ or approved equal, unless noted otherwise. Embedment shall be as follows unless noted otherwise:

| Diameter | Embedment | Diameter | Embedment |
|---|---|---|---|
| 3/8" | 2" | 5/8" | 4" |
| 1/2" | 3 1/4" | 3/4" | 4 3/4" |

4.3.6. Adhesive anchors shall be Hilti HIT-RE 500 V3 or HIT-HY 200 with HAS Standard rods or approved equal, unless noted otherwise. Embedment shall be as follows unless noted otherwise:

| Diameter | Embedment | Diameter | Embedment |
|---|---|---|---|
| 3/8" | 3 3/8" | 5/8" | 5 5/8" |
| 1/2" | 4 1/2" | 3/4" | 6 3/4" |

4.3.7. Epoxy for dowels drilled into concrete shall be Hilti HIT-RE 500 V3, HIT-HY 200, or approved equal, unless noted otherwise. Embedment shall be as follows unless noted otherwise:

| Bar | Embedment | Bar | Embedment |
|---|---|---|---|
| # 3 | 3 1/4" | # 5 | 5 3/4" |
| # 4 | 4 3/8" | # 6 | 6" |

4.3.8. Anchor capacity is dependent upon spacing between adjacent anchors and proximity of anchors to edge of concrete. Install anchors in accordance with spacing and edge clearances indicated on the drawings.

4.3.9. Contractor shall verify the location of reinforcing bars and/or prestressing tendons via GPR, X-Ray, or other means before drilling anchor holes. Reinforcing steel shall not be damaged.

4.4. PRECAST CONCRETE NOTES:

4.4.1. Precast concrete components shall be designed and erected in accordance with methods and specifications contained in the "PCI Design Handbook" and ACI 318.

4.4.2. Precast components shall be designed and manufactured to carry all loads as shown in the Construction Documents.

4.4.3. The Precast Supplier shall be responsible for the design, fabrication, and installation of precast members. The Precast Supplier shall also provide hangers as required for openings in slabs, and shall verify the size, number, and location of all mechanical openings (with the Mechanical Contractor).

4.4.4. The precast fabricator shall submit erection drawings and supporting engineering calculations for all structural precast components to the Engineer of Record for review. These submittals shall be signed and stamped by a professional engineer registered in the state where the project is located.

4.4.5. Size of precast members shall not be changed unless accepted by the Architect and Structural Engineer.

4.4.6. Precast panels shall not be reinforced with prestressing steel, only mild steel reinforcing is permissible.

5. STEEL:

5.1. REFERENCES:

Steel Construction Manual, 14th Edition

5.2. STRUCTURAL STEEL:

5.2.1. All beams shall be marked and erected with natural camber upwards.

5.2.2. Do not prime structural steel members that will receive spray-applied fireproofing. Do not prime surfaces of structural steel members that will be in contact with poured concrete or will receive welded studs.

5.2.3. The top and bottom of all steel columns that are in bearing shall be finished to a common plane.

5.2.4. All headed studs are to be welded to the steel section using an electric arc welding gun.

5.3. CONNECTIONS:

5.3.1. Connections shall be as shown on the drawings. Where connections are not explicitly detailed, fabricator shall design the connections in accordance with AISC 360 using LRFD methods.

5.3.2. The fabricator shall submit engineering calculations for all connections not explicitly detailed in the drawings to the Engineer for review. These submittals shall be signed and stamped by a professional engineer registered in the state where the project is located.

5.3.3. Connections shall be designed for the minimum design shear shown in the Beam Connection Schedule unless end reactions, shown on drawings, exceed minimum design shear. Where end reactions are not shown on plan, use minimum design shears listed in the schedule.

5.3.4. All beam reactions, axial forces, and moments act concurrently unless noted otherwise. Beam reactions act in gravity direction while axial and moment forces are to be considered reversible.

5.3.5. All bolts shall be either A325 or A490 high strength bolts. Use no more than two bolt diameters, one grade per diameter, skip one size between diameters.

5.3.6. All high strength bolts shall be installed in snug-tightened joints unless noted otherwise on the drawings. Fabricator may substitute ASTM F1852 N for A325 N bolts. Where slip critical joints are shown on the drawings, Class A faying surfaces shall be used. Slip shall be checked at the factored-load level.

5.3.7. Weld metal used shall be 70 KSI.

5.3.8. All welding shall be performed by AWS qualified operators.

5.3.9. All welded joints shall be prequalified or qualified by testing.

5.3.10. When welded connections are shown in the drawings, it is not the intent to specify the specific process or preparation.

5.3.11. Do not prime surfaces of structural steel members in areas that will be welded.

5.4. STEEL JOISTS:

5.4.1. REFERENCE: Steel Joist Institute, "Standard Specifications, Load Tables and Weight Tables for Steel Joists and Joist Girders," latest edition.

5.4.2. All steel joists shall conform to the requirements of the Steel Joist Institute Standard Specifications. Joist fabricator shall be a member of the Steel Joist Institute.

5.4.3. Bridging size, type, and spacing of all joist types shall be as per Steel Joist Institute.

5.4.4. Provide bottom chord ceiling extensions as required on the architectural drawings.

5.4.5. Header angles for steel joists shall be designed and furnished by the joist fabricator.

5.5. STEEL DECK:

5.5.1. REFERENCE: Steel Deck Institute; "Design Manual for Composite Decks, Form Decks and Roof Decks," latest edition.

5.5.2. Roof and floor deck is designed to act as a diaphragm to brace other building components. No portion shall be removed unless separate bracing is designed and provided.

5.5.3. Any openings or holes larger than 12" not shown on the plans will not be permitted unless reviewed by the Architect/Engineer.

5.5.4. The deck supplier shall provide deck accessories such as pour stops, cell closure plates, deck supports at columns and other miscellaneous deck items as required, even if not specifically shown on the Contract Documents.

5.5.5. Roof deck end joints shall have 6" minimum end laps.

5.5.6. The Contractor shall be cognizant of allowable construction live loads and plan concrete placing operations accordingly so as to not overstress or damage the composite or form deck. Contractor shall verify with deck manufacturer that the proposed concrete placing operation is compatible with the type, gauge, span, and length of the composite or form deck as furnished.

5.5.7. Deck supplier shall verify that shoring is not required to support the wet weight of concrete for the deck type, gauge, span, and layout provided.

5.5.8. Concrete shall be placed on deck in accordance with ACI 302. Slabs shall be screeded to maintain the minimum thickness shown on the drawings and proper top of slab elevation. Contractor shall include allowance for additional concrete quantities due to the deflected shape of non-cambered horizontal framing members.

5.5.9. Electrical conduit shall not be placed in composite slabs.

5.5.10. Composite deck shall be galvanized or phosphatized and painted.

5.6. COLD-FORMED STEEL

5.6.1. All structural members shall be designed by Supplier in accordance with American Iron and Steel Institute (AISI) "Specification for the design of Cold-Formed structural members", Latest Edition.

5.6.2. Prior to fabrication of framing, the Contractor shall submit fabrication and erection drawings with supporting calculations to the Architect and Engineer for review. These submittals shall be signed and stamped by a professional engineer registered in the state where the project is located.

6. MISCELLANEOUS:

6.1. DEFERRED STRUCTURAL SUBMITTALS

6.1.1. The design and documentation of some components defined using performance-based specifications may be deferred until after a building permit is obtained.

6.1.2. Deferred submittals include, but are not limited to, the items listed below.

6.1.3. For the following deferred submittals, the Contractor shall submit shop drawings and calculations signed and stamped by a professional engineer registered in the state where components are installed. These shall be submitted for review prior to fabrication.

Stairs
Exterior Cold-Formed Framing
Curtain Wall Systems
Guardrails and Handrails
Structural Steel Connections
Structural Precast
Architectural Precast
Helical Piles
Underpinning Systems
Supports for Medical Equipment

6.1.4. For the following deferred submittals, the Contractor shall submit shop drawings for review prior to fabrication.

Steel Joists
Elevators
Specialty Retaining Walls

6.2. CONSTRUCTION JOINTS:

6.2.1. The Contractor shall submit drawings showing the proposed construction and control joints for all areas. This includes walls, structural floor systems, slabs on grade, etc. This drawing shall be reviewed by the Architect /Engineer and returned to the Contractor prior to pouring any concrete. The construction joint drawing shall be furnished to the fabricators before their shop drawings are submitted.

6.2.2. If the construction joints are changed after being reviewed, revised drawings shall be submitted for review.

6.2.3. Construction joints shall be made as detailed on the drawings.

6.2.4. Construction joints and control joints in concrete foundation walls shall be located at a maximum of 40 foot center spacing.

6.3. ANCHOR RODS:

6.3.1. All anchor rods for mechanical and electrical equipment shall be furnished and located by the respective Subcontractors and set by the General Contractor except where the other Subcontractors furnish their own concrete pads.

6.4. NON LOAD BEARING PARTITION WALLS:

6.4.1. Non load bearing partition walls are generally not shown on the structural drawings. Care shall be taken by the Contractor to maintain a deflection space between the top of partition walls and floor or roof structure above.

6.4.2. See Typical Details and deflection requirements of horizontal framing members in Section 1 of these Notes for minimum deflection space between top of non load bearing partition walls and overhead structure.

6.5. VERIFICATIONS:

6.5.1. The General Contractor shall verify all openings sizes, pad sizes, and locations with the respective Subcontractors.

6.5.2. Structural steel supplier and erector are responsible for providing deck reinforcement or framing as shown on typical structural details for mechanical roof openings. See mechanical drawings for quantities, sizes and locations. The cost of structural redesign fees shall be borne by the Mechanical Contractor for equipment and/or opening changes made after structural documents have been issued.

6.6. CORE DRILLING:

6.6.1. All core drilling shall be done by the Mechanical and Electrical Subcontractors for their own work under the supervision of the General Contractor. No reinforcing steel shall be cut. Verify location of reinforcing steel before core drilling. Do not core through beams or columns. The maximum core hole through slabs shall be 12". If these requirements cannot be met, contact the Engineer.

6.7. NEW WORK IN CONJUNCTION WITH EXISTING CONSTRUCTION:

6.7.1. VERIFICATION: The Contractor shall verify, by field check, all sizes, dimensions, elevations, locations, etc. of elements of the existing construction which are relative to the new construction.

6.7.2. DIMENSIONS: All dimensions involving new Work tying into or governed by existing construction shall be field checked by the Contractor and furnished to the Subcontractors prior to fabrication of any Work. The verified dimensions shall appear and be noted as such on the first shop drawing submitted.

6.7.3. ASSUMPTIONS: The Engineer has made assumptions concerning the soundness of the existing buildings and these assumptions are that this building was designed and constructed in conformity with good design and construction practices. The Contractor shall take extraordinary precautions concerning preservation of the building during demolition and new construction Work. Further, the Contractor shall agree to assume all responsibility for the preservation of this property.

6.7.4. NOTIFICATION: The Contractor shall notify the Architect/Engineer immediately of any discrepancies between construction documents and actual field conditions.

6.7.5. HOLES: All holes through existing construction shall be core drilled or saw cut.

6.7.6. NEW OPENINGS IN EXISTING SLABS: New openings in existing slabs shall be cut in such a manner as to minimize cutting existing slab reinforcement. The slab shall not be overcut unless approved by the Engineer.

6.8. GENERAL:

6.8.1. These drawings do not include necessary components for construction safety.

6.8.2. The structural design is based only on the building in its completed state. Contractors and their subs shall take whatever precautions are necessary to withstand all horizontal and vertical loadings that may be encountered during the construction prior to completion of the building.

6.8.3. During construction, the Contractor may encounter existing conditions which are not now known or are at variance with project documentation (Discovery). Such conditions may interfere with new construction or required protection and/or support of existing Work during construction, or may consist of damage or deterioration to structural materials or components which could jeopardize the structural integrity of the building(s).

6.8.4. The Contractor shall notify the Engineer of all Discoveries that the Contractor believes may interfere with proper execution of the Work or jeopardize the structural integrity of the building(s) prior to proceeding with Work related to such Discoveries.

| Revision # | Description | Date: |
|---|---|---|

CONSULTANTS


ARCHITECTURAL: BWBR
380 St. Peter St
Suite 600
St. Paul, MN 55102
Phone: 651-222-3701

STRUCTURAL: ERA STRUCTURAL ENGINEERING
Ericksen Roed & Associates
2550 University Ave W
Suite 423-S
St. Paul, MN 55114
Phone: 651-251-7570

MEP: DUNHAM
Dunham Associates, Inc.
50 South Sixth St
Suite 1100
Minneapolis, MN 55402
Phone: 612-465-7550

CIVIL: EVS
EVS
10025 Valley View Rd
Suite 140
Eden Prairie, MN 55344
Phone: 952-646-0236

LANDSCAPE: CONFLUENCE
CONFLUENCE
524 N Main Ave
Suite 201
Sioux Falls, SD 57104
Phone: 605-339-1205

ARCHITECT OF RECORD
A/E:
Stone Group Architects
600 E 7th Street
Sioux Falls, SD 57103
605-271-1144
STONE GROUP ARCHITECTS


STAMP
REGISTERED PROFESSIONAL ENGINEER
REG. NO. 4750
MICHAEL A. DESITTER
SOUTH DAKOTA
06/22/2022

Office of Construction and Facilities Management

VA U.S. Department of Veterans Affairs

Drawing Title: GENERAL STRUCTURAL NOTES

Phase: CONSTRUCTION DOCUMENTS

Approved:

FOR OFFICIAL USE ONLY

Project Title: NEW FRONT LOBBY AND PRIMARY CARE ADDITION

Project Number: VA #438-480 ERA #2020-361

Building Number: 5

Location: SIOUX FALLS, SOUTH DAKOTA

Drawing Number: SI002

Issue Date: 06/22/2022 | Checked: SJC | Drawn: IDB

VA FORM 08 - 6231

C:_Revit_Local_ShortTermLocal\20-361_S20_SF_VA Lobby_DesiringtonERA.rvt

6/21/2022 4:16:48 PM

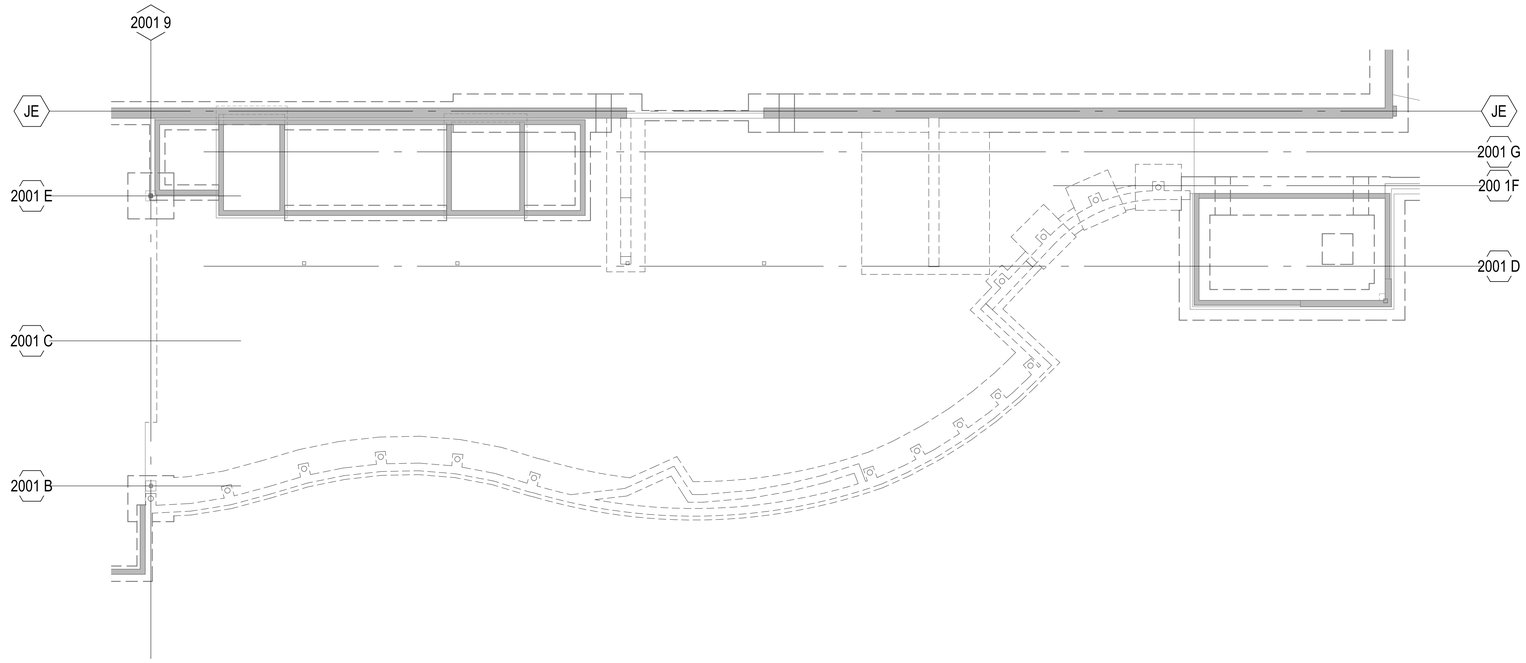


1 SD101 FOUNDATION DEMOLITON PLAN
1/8" = 1'-0"

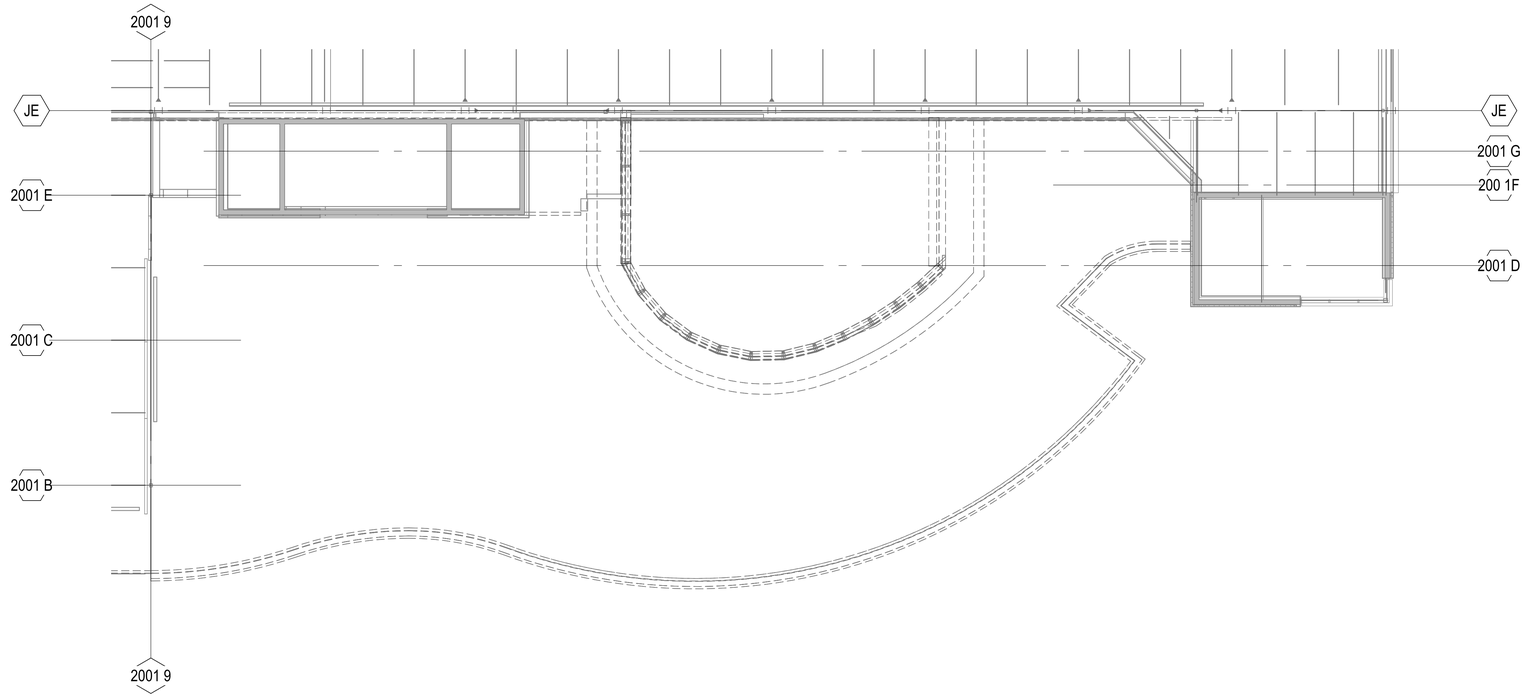


2 SD101 ROOF FRAMING DEMOLTION PLAN
1/8" = 1'-0"

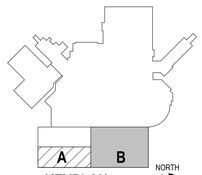


KEYPLAN
NTS
NORTH

| Revision # | Description | Date: |
|---|---|---|
| | | |

**CONSULTANTS**

| ARCHITECTURAL: | STRUCTURAL: | MEP: | CIVIL: | LANDSCAPE: |
|---|---|---|---|---|
| BWBR | ERA STRUCTURAL ENGINEERING | DUNHAM | EVS | CONFLUENCE |
| 380 St. Peter St<br>Suite 600<br>St. Paul, MN 55102<br>Phone: 651-222-3701 | **Ericksen Roed & Associates**<br>2500 University Ave W<br>Suite 423-S<br>St. Paul, MN 55114<br>Phone: 651-251-7570 | **Dunham Associates, Inc.**<br>50 South Sixth St<br>Suite 1100<br>Minneapolis, MN 55402<br>Phone: 612-465-7550 | **EVS**<br>10025 Valley View Rd<br>Suite 140<br>Eden Prairie, MN 55344<br>Phone: 952-646-0236 | **CONFLUENCE**<br>524 N Main Ave<br>Suite 201<br>Sioux Falls, SD 57104<br>Phone: 605-339-1205 |

**ARCHITECT OF RECORD**

**A/E:**
**Stone Group Architects**
**600 E 7th Street**
**Sioux Falls, SD 57103**
**605-271-1144**

STONE GROUP ARCHITECTS

**STAMP**

REGISTERED PROFESSIONAL ENGINEER
REG. NO. 4750
MICHAEL A. DOSITTO
SOUTH DAKOTA
06/22/2022

Office of Construction and Facilities Management

VA U.S. Department of Veterans Affairs

| | | | |
|---|---|---|---|
| **Drawing Title**<br>STRUCTURAL DEMOLITION PLANS - AREA B | **Phase**<br>CONSTRUCTION DOCUMENTS | **Project Title**<br>NEW FRONT LOBBY AND PRIMARY CARE ADDITION | **Project Number**<br>VA #438-480<br>ERA #2020-361 |
| | | | **Building Number**<br>5 |
| **Approved:** | FOR OFFICIAL USE ONLY | **Location**<br>SIOUX FALLS, SOUTH DAKOTA | **Drawing Number**<br>SD101 |
| | | **Issue Date** 06/22/2022 · **Checked** SJC · **Drawn** IDB | |

VA FORM 08 - 6231

C:_Revit_Local_Local_ShortTerm\Local#20-361_S20_SF_VA Lobby_BevingtonERA.rvt

6/21/2022 4:13:08 PM

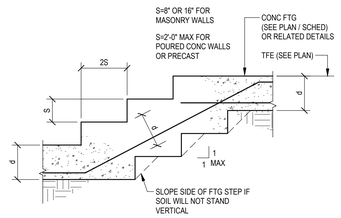


1 SB001 STEPPED FOOTING DETAIL
#00701 NO SCALE

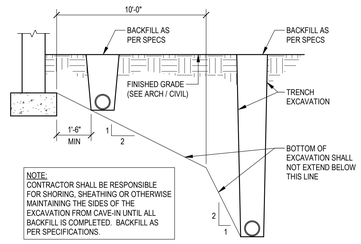


2 SB001 UTILITIES PARALLEL TO FOOTINGS DETAIL
#00702 NO SCALE

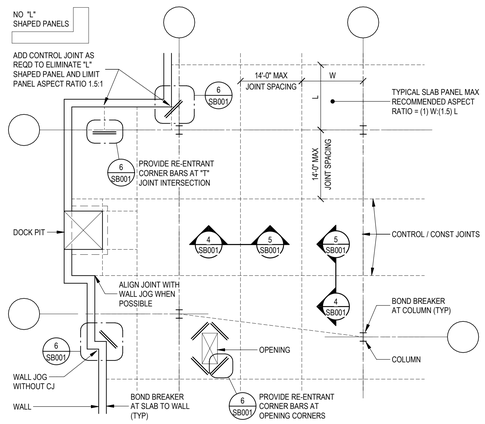


SLAB ON GRADE JOINTING AND ADDITIONAL REINFORCEMENT NOTES
1. MAX CONTROL JOINT SPACING TO BE 14'-0" OC EACH WAY.
2. CONTRACTOR TO SUBMIT SLAB ON GRADE JOINT PLAN THREE WEEKS PRIOR TO SLAB POUR.
3. LIMIT SLAB PANEL ASPECT RATIO TO 1.5:1.
4. MINIMIZE "L" SHAPED PANELS WHEN AT ALL POSSIBLE OR PROVIDE ADDITIONAL JOINTING OR RE-ENTRANT CORNER BARS.
5. WHENEVER POSSIBLE LOCATE JOINTS UNDER WALL AND FIXTURES.
6. SAW CUTTING SHALL BE DONE AS SOON AS THE CONCRETE HAS HARDENED SUFFICIENTLY TO PERMIT CUTTING WITHOUT CHIPPING, SPALLING OR TEARING BUT NOT MORE THAN 12 HOURS AFTER POURING.

3 SB001 SOG - JOINTING AND ADDITIONAL REINFORCEMENT REQUIREMENTS
#01901 NO SCALE

NOTE:
SAW CUTTING SHALL BE DONE AS SOON AS THE CONCRETE HAS HARDENED SUFFICIENTLY TO PERMIT CUTTING WITHOUT CHIPPING, SPALLING OR TEARING BUT NOT MORE THAN 12 HOURS AFTER POURING

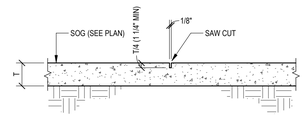


4 SB001 SOG - CONTROL JOINT
#01902 NO SCALE

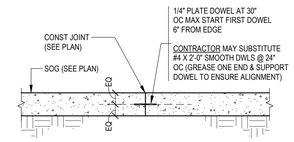


5 SB001 SOG - CONSTRUCTION JOINT
#01903 NO SCALE

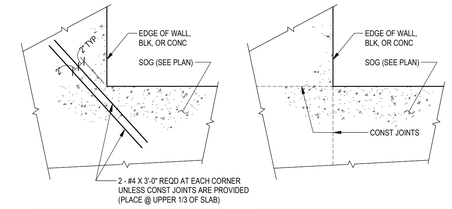


6 SB001 SOG - RE-ENTRANT CORNERS
#01904 NO SCALE

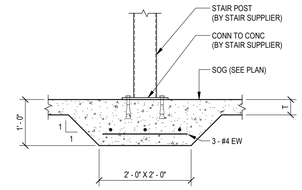


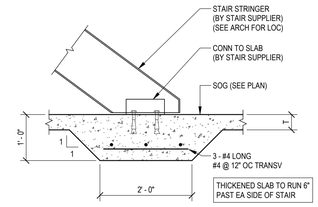


8 SB001 SOG - THICKENED SLAB AT STAIR / POST
#01906 NO SCALE

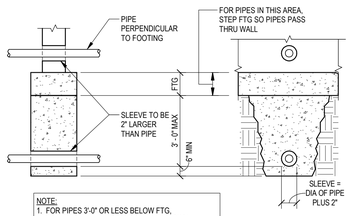


NOTE:
1. FOR PIPES 3'-0" OR LESS BELOW FTG, PROVIDE SLEEVE AND CONCRETE AS SHOWN.
2. FOR PIPES MORE THAN 3'-0" BELOW FTG, USE STEPPED FTG DETAIL TO GET WITHIN 3'-0" MAX.
CONTRACTOR'S OPTION:
OMIT STEPPED FOOTING AND CONCRETE BELOW AND PROVIDE PROPERLY COMPACTED SOIL BETWEEN BOTTOM OF FOOTING TO 6" MIN BELOW PIPE SLEEVE.

9 SB001 PIPES PERPENDICULAR TO FOOTINGS DETAIL
#00703 NO SCALE

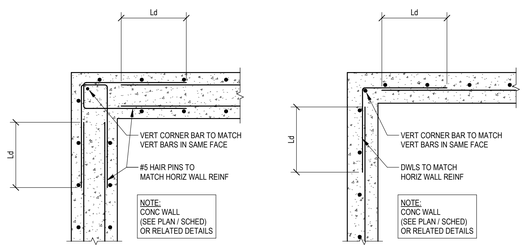


10 SB001 CONCRETE - REINFORCING AT WALL INTERSECTIONS
#00704 NO SCALE

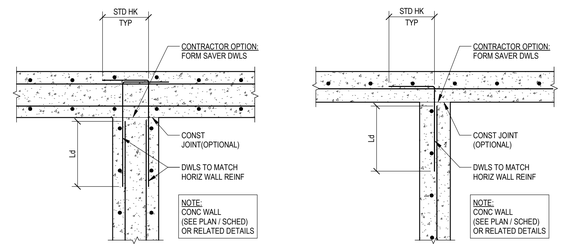


7 SB001 SOG - RECESS / DEPRESSION
#01905 NO SCALE

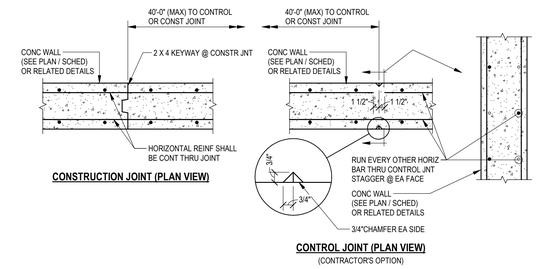


11 SB001 CONCRETE WALL - CONSTRUCTION / CONTROL JOINT
#00705 NO SCALE

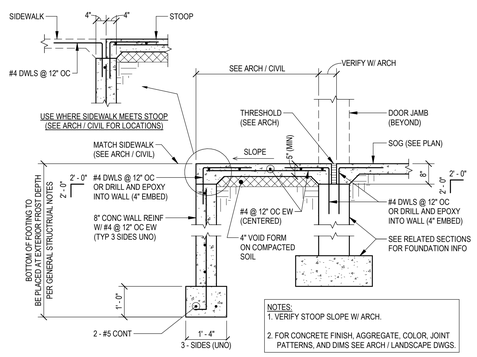


NOTES:
1. VERIFY STOOP SLOPE W/ ARCH.
2. FOR CONCRETE FINISH, AGGREGATE, COLOR, JOINT PATTERNS, AND DIMS SEE ARCH / LANDSCAPE DWGS.

12 SB001 CONCRETE - STOOP
#00708 NO SCALE

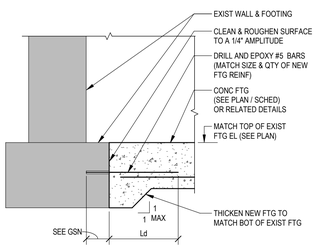


13 SB001 CONCRETE - NEW TO EXISTING FOUNDATION
#00711 NO SCALE

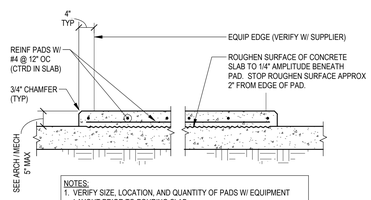


NOTES:
1. VERIFY SIZE, LOCATION, AND QUANTITY OF PADS W/ EQUIPMENT LAYOUT PRIOR TO POURING SLAB.
2. NOTIFY ENGINEER IF EQUIPMENT LOAD UPON PAD EXCEEDS 100 PSF.
3. THE PAD SHOWN IS FOR HOUSEKEEPING ONLY. NOTIFY ENGINEER IF HEAVY EQUIPMENT, VIBRATING OR CYCLIC LOADS ARE EXPECTED.

14 SB001 SOG - RAISED HOUSEKEEPING PAD
#01908 NO SCALE

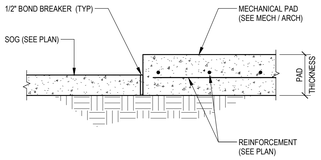


15 SB001 SOG - ISOLATED MECHANICAL PADS
#01912 NO SCALE

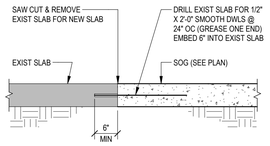


16 SB001 SOG - NEW TO EXIST CONSTRUCTION JOINT
#01913 NO SCALE

| Revision # | Description | Date: |
|---|---|---|

## CONSULTANTS

| ARCHITECTURAL: | STRUCTURAL: | MEP: | CIVIL: | LANDSCAPE: |
|---|---|---|---|---|
| BWBR | ERA STRUCTURAL ENGINEERING | DUNHAM | EVS | CONFLUENCE |
| 380 St. Peter St<br>Suite 600<br>St. Paul, MN 55102<br>Phone: 651-222-3701 | **Ericksen Roed & Associates**<br>2550 University Ave W<br>Suite 423-S<br>St. Paul, MN 55114<br>Phone: 651-251-7570 | **Dunham Associates, Inc.**<br>50 South Sixth St<br>Suite 1100<br>Minneapolis, MN 55402<br>Phone: 612-465-7550 | **EVS**<br>10025 Valley View Rd<br>Suite 140<br>Eden Prairie, MN 55344<br>Phone: 952-646-0236 | **CONFLUENCE**<br>524 N Main Ave<br>Suite 201<br>Sioux Falls, SD 57104<br>Phone: 605-339-1205 |

## ARCHITECT OF RECORD

**A/E:**
**Stone Group Architects**
**600 E 7th Street**
**Sioux Falls, SD 57103**
**605-271-1144**

STONE GROUP ARCHITECTS

**STAMP**
REGISTERED PROFESSIONAL ENGINEER
REG. NO. 4750
MICHAEL A. DUSTMAN
SOUTH DAKOTA
06/22/2022

Office of Construction and Facilities Management

VA U.S. Department of Veterans Affairs

| Drawing Title | Phase | Project Title | Project Number |
|---|---|---|---|
| TYPICAL DETAILS - FOUNDATION | CONSTRUCTION DOCUMENTS | NEW FRONT LOBBY AND PRIMARY CARE ADDITION | VA #438-480<br>ERA #2020-361 |
| | | | **Building Number** 5 |
| **Approved:** | FOR OFFICIAL USE ONLY | **Location** SIOUX FALLS, SOUTH DAKOTA | **Drawing Number** SB001 |
| | | **Issue Date** 06/22/2022 · **Checked** SJC · **Drawn** IDB | |

VA FORM 08 - 6231

C:_Revit_Local_Short Term\Local\20-361_S20_SF_VA Lobby_bevington\ERA.rvt

6/21/2022 4:12:04 PM

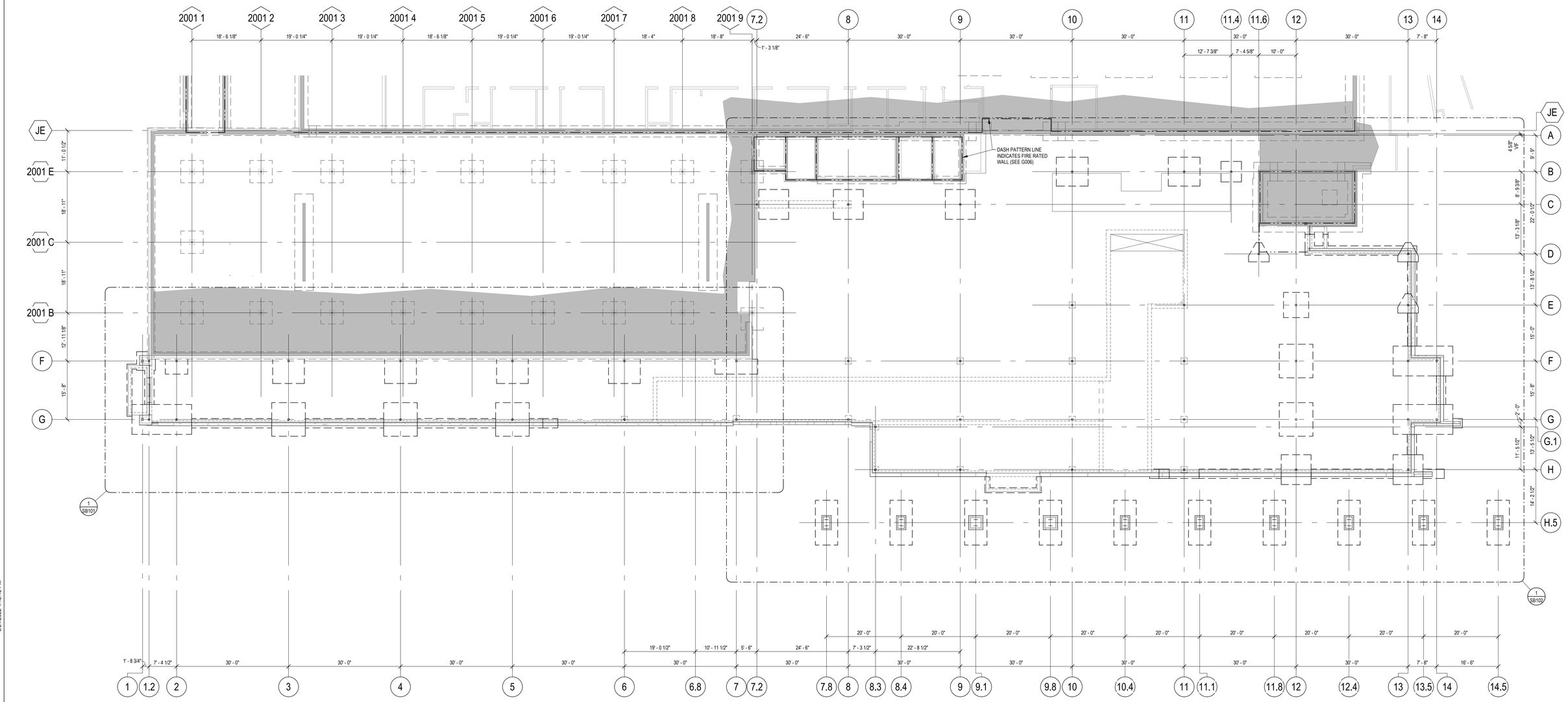


1 SB100 OVERALL FOUNDATION PLAN
3/32" = 1'-0"

**FOR FOUNDATION PLAN SHEET NOTES SEE SHEET SB101**

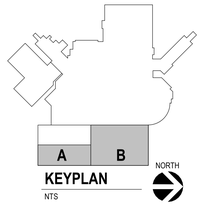


**KEYPLAN**
NTS

| Revision # | Description | Date: |
|---|---|---|
| | | |

## CONSULTANTS

**ARCHITECTURAL:** BWBR
380 St. Peter St
Suite 600
St. Paul, MN 55102
Phone: 651-222-3701

**STRUCTURAL:** ERA Structural Engineering
Ericksen Roed & Associates
2550 University Ave W
Suite 423-S
St. Paul, MN 55114
Phone: 651-251-7570

**MEP:** Dunham
Dunham Associates, Inc.
50 South Sixth St
Suite 1100
Minneapolis, MN 55402
Phone: 612-465-7550

**CIVIL:** EVS
EVS
10025 Valley View Rd
Suite 140
Eden Prairie, MN 55344
Phone: 952-646-0236

**LANDSCAPE:** CONFLUENCE
CONFLUENCE
524 N Main Ave
Suite 201
Sioux Falls, SD 57104
Phone: 605-339-1205

## ARCHITECT OF RECORD

**A/E:**
**Stone Group Architects**
**600 E 7th Street**
**Sioux Falls, SD 57103**
**605-271-1144**

STONE GROUP ARCHITECTS

**STAMP**
REGISTERED PROFESSIONAL ENGINEER
REG. NO. 4750
MICHAEL A. DESJITHAR
SOUTH DAKOTA
06/22/2022

Office of Construction and Facilities Management

VA U.S. Department of Veterans Affairs

| | | | |
|---|---|---|---|
| **Drawing Title** OVERALL FOUNDATION PLAN | **Phase** CONSTRUCTION DOCUMENTS | **Project Title** NEW FRONT LOBBY AND PRIMARY CARE ADDITION | **Project Number** VA #438-480 ERA #2020-361 |
| | | | **Building Number** 5 |
| **Approved:** | FOR OFFICIAL USE ONLY | **Location** SIOUX FALLS, SOUTH DAKOTA | **Drawing Number** SB100 |
| | | **Issue Date** 06/22/2022 · **Checked** SJC · **Drawn** IDB | |

VA FORM 08 - 6231

C:_Revit_Local_ShortTerm\Local\20-361_S20_SF_VA Lobby_BeningtonERA.rvt

6/21/2022 4:12:12 PM

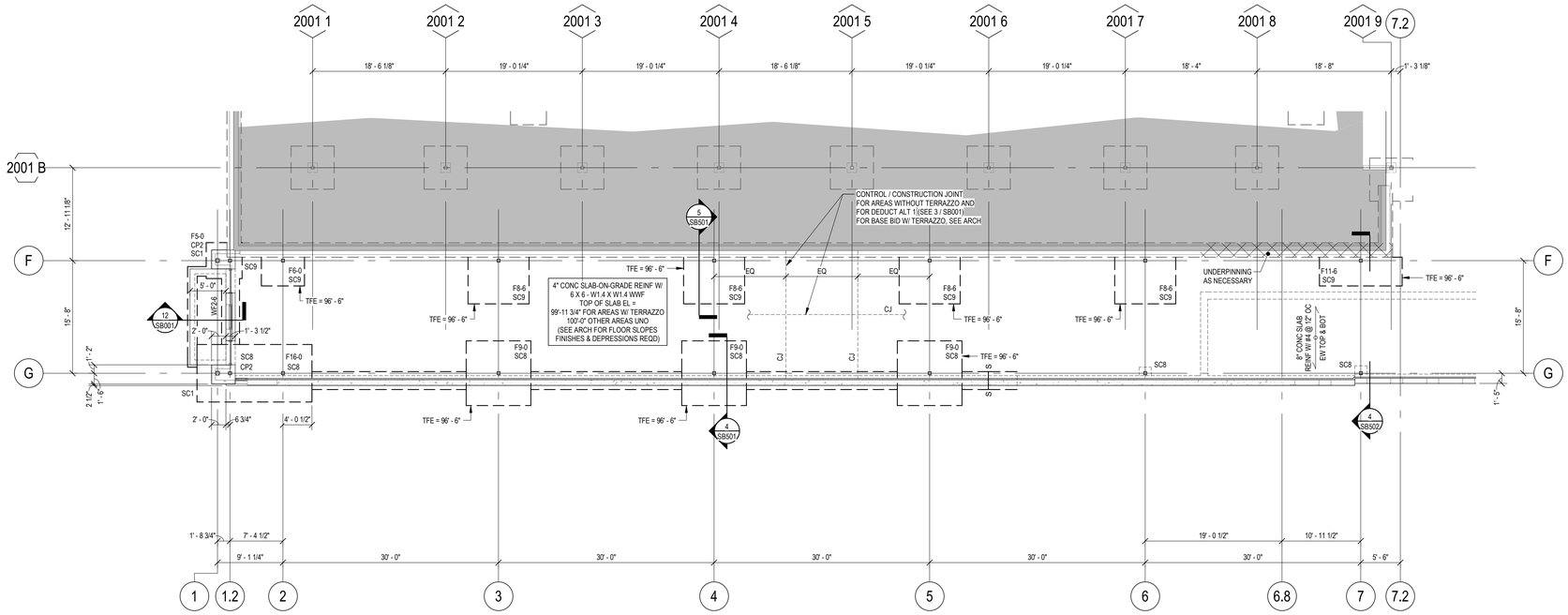


1 SB101 FOUNDATION PLAN - AREA A
1/8" = 1'-0"

## FOUNDATION PLAN SHEET NOTES

A. General

1. See Cover Sheet for structural sheet index defining sheet name, sheet number and issue status.
2. See Cover Sheet for Structural Abbreviations, Typical Marks & Symbols and Plan Legends.
3. Review General Structural Notes and typical details in conjunction with applicable plans. See sheet index on Cover Sheet.
4. Elevation 100'-0" on these drawings match elevation 1500.05' on Civil drawings at time of issue. Verify with latest Civil drawings and notify SEOR if different.
5. Coordinate stoop sizes and locations with Architectural and Civil. See typical details for stoop construction.
6. If present, coordinate the sizes and locations of tunnels, electrical cells, pits, pipes, floor drains, trenches and floor recesses with Architectural, Structural, Mechanical, Civil, and Electrical drawings.
7. Frost protection is required for all foundations if winter conditions are present.
8. Dimensions shown with +/- indicate dimensions that have been rounded to the nearest 1/16 of an inch.
9. Contractor shall coordinate all embedded items required for precast connections. Embedded items shall be provided by precast supplier and installed by concrete contractor.

B. Existing Foundation Underpinning

1. The intent of underpinning is to lower the existing foundations so the load bears at the same elevation as the bottom of the new foundations.
2. Contractor assumes complete responsibility for all underpinning, and all other temporary, precautionary, or protective construction necessary to brace, support or retain the existing building. Contractor shall engage a qualified engineer licensed in the state of the project to design the wall and temporary support. Signed and sealed structural calculations and drawings shall be submitted to the General Contractor.
3. Underpinning shall be constructed by a company familiar with this type of work and having a history of experience which is satisfactory to the Architect and Engineer.

C. Footings

1. "F#" denotes footing mark. See schedule for size and reinforcement.

   "WF#" denotes wall footing mark See schedule for size and reinforcement.
2. Top of footing elevation (TFE) is shown on plan. See typical detail sheets for stepped footing detail.
3. Locations of footing steps on plan are approximate. Contractor shall verify all step locations with Civil grade elevations to maintain minimum frost depths and all Mechanical, Electrical and Plumbing pipe elevations prior to pouring footings. Coordinate footing step locations with precaster if applicable. See typical detail sheets for pipes perpendicular and parallel to footing.
4. All footings shall be centered below walls, columns and piers unless dimensioned otherwise.
5. Provide dowels to walls, columns and piers above. Hooked dowels shall be tied to footing reinforcement prior to pouring concrete.

D. Pile Foundations

1. "PF#" denotes pile foundations / pile cap mark. See typical pile details for size and reinforcement.
2. Top of pile foundation elevation (TPFE =) as noted on plan.
3. All pile foundations shall be centered below columns and piers unless dimensioned otherwise.
4. Provide dowels to columns, walls, grade beams and piers above. Hooked dowels shall be tied to pile cap reinforcement prior to pouring concrete.
5. Pile foundations have been designed using 40 ton helical piles, based on the geotechnical report as noted in the General Structural Notes. Notify Structural Engineer of Record if alternate pile size or capacity is proposed.

E. Concrete Piers

1. "CP#" denotes concrete pier mark. See pier schedule for size and reinforcement.
2. Top of pier elevation (TPE =) is shown on plan.
3. All concrete piers shall be centered on grid intersections unless dimensioned otherwise on plan.

F. Slab On Grade

1. Top of slab elevation (TOSL =) for base bid is 99'-11 3/4" for areas with terrazzo, 100'-0" for other areas UNO. Top of slab elevation (TOSL =) for Deduct Alternate is 100'-0" UNO.
2. See Architectural drawings for depressions, slab slopes, finishes and drains.
3. Concrete slab thickness shall be as noted on plan. See Architectural drawings for vapor barrier requirements and geotechnical report for slab sub-base thickness and material specification.
4. Unless noted otherwise, reinforce slab with 6 x 6 - W1.4 x W1.4 WWF chaired in place 1" below top of slab.
5. Provide control joints(CJ) and construction joints (CONST JT) in slab. See typical foundation details.
6. Concrete Contractor shall submit location of slab control joints (CJ) and construction joints (CONST JT) for review three weeks minimum prior to slab pour.

G. Steel Columns

1. "SC#" denotes steel column mark. See column schedule for size, base plate and anchor bolt information.
2. All steel columns shall be centered on grid intersections unless dimensioned otherwise on plan.
3. Steel columns, base plates, and anchor bolts below grade exposed to soil shall be coated with two heavy coats of bitumastic paint.

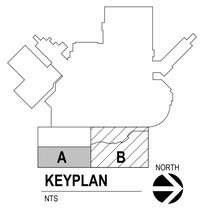


| Revision # | Description | Date: |
|---|---|---|
| | | |

C:_Revit_Local_Central\20-361_SJ20_SF_VA Lobby_bewright\ERA.rvt

## CONSULTANTS


ARCHITECTURAL: BWBR
380 St. Peter St
Suite 600
St. Paul, MN 55102
Phone: 651-222-3701

STRUCTURAL: ERA STRUCTURAL ENGINEERING
Ericksen Roed & Associates
2550 University Ave W
Suite 423-S
St. Paul, MN 55114
Phone: 651-251-7570

MEP: DUNHAM
Dunham Associates, Inc.
50 South Sixth St
Suite 1100
Minneapolis, MN 55402
Phone: 612-465-7550

CIVIL: EVS
EVS
10025 Valley View Rd
Suite 140
Eden Prairie, MN 55344
Phone: 952-646-0236

LANDSCAPE: CONFLUENCE
CONFLUENCE
524 N Main Ave
Suite 201
Sioux Falls, SD 57104
Phone: 605-339-1205

ARCHITECT OF RECORD
A/E:
Stone Group Architects
600 E 7th Street
Sioux Falls, SD 57103
605-271-1144
STONE GROUP ARCHITECTS


STAMP
REGISTERED PROFESSIONAL ENGINEER
REG. NO. 4750
MICHAEL A. DEWITTER
SOUTH DAKOTA
06/22/2022

Office of Construction and Facilities Management

VA U.S. Department of Veterans Affairs

| | | | |
|---|---|---|---|
| Drawing Title: GROUND LEVEL FOUNDATION PLAN - AREA A | Phase: CONSTRUCTION DOCUMENTS | Project Title: NEW FRONT LOBBY AND PRIMARY CARE ADDITION | Project Number: VA #438-480, ERA #2020-361 |
| | | | Building Number: 5 |
| Approved: | FOR OFFICIAL USE ONLY | Location: SIOUX FALLS, SOUTH DAKOTA | Drawing Number: SB101 |
| | | Issue Date: 06/22/2022 · Checked: SJC · Drawn: IDB | |

VA FORM 08 - 6231

8/21/2022 4:12:19 PM

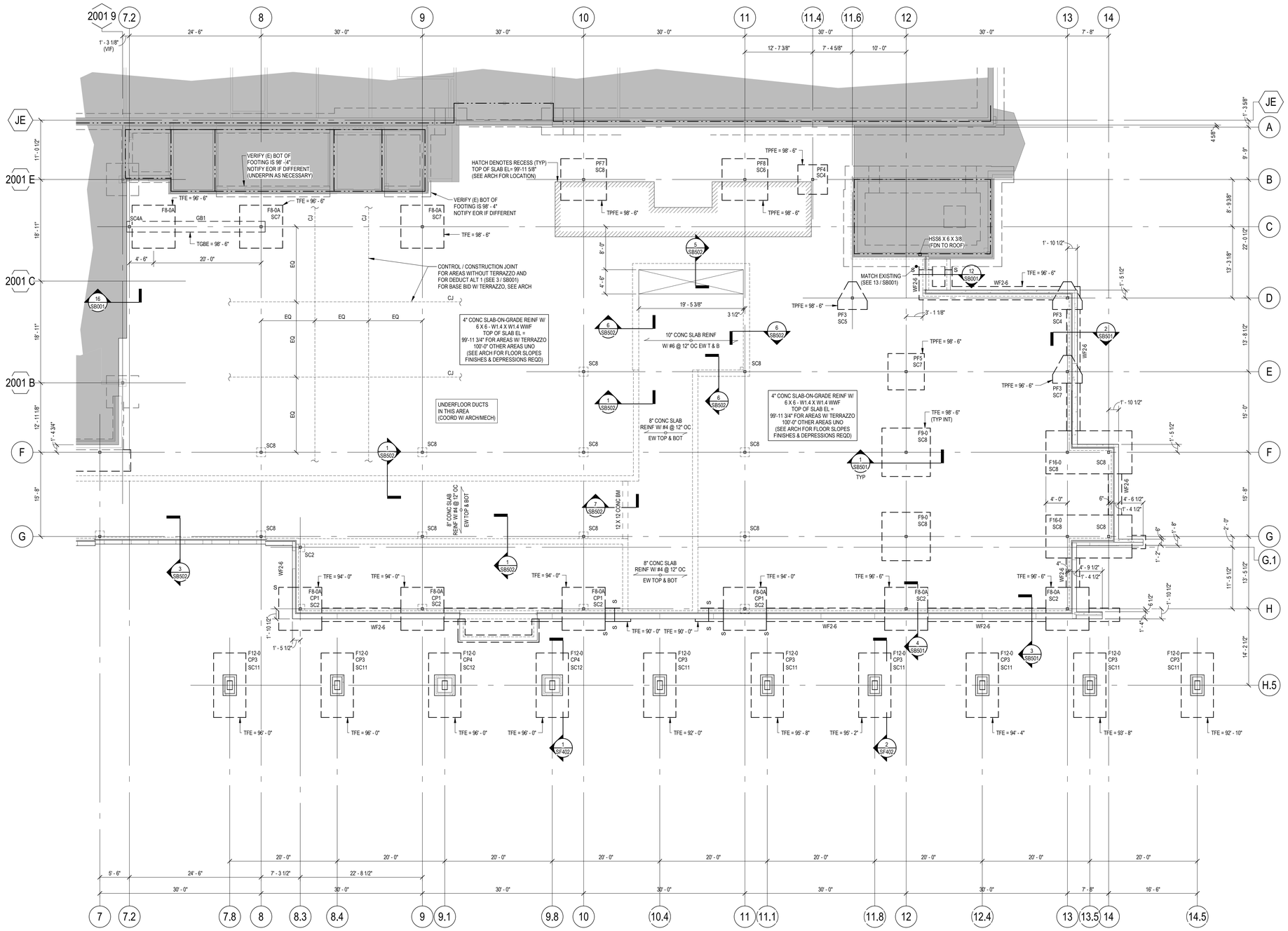


1 SB102 FOUNDATION PLAN - AREA B
1/8" = 1'-0"

**FOR FOUNDATION PLAN SHEET NOTES SEE SHEET SB101**

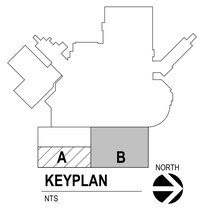


KEYPLAN
NTS

| Revision # | Description | Date: |
|---|---|---|
| | | |

## CONSULTANTS

ARCHITECTURAL: BWBR
380 St. Peter St
Suite 600
St. Paul, MN 55102
Phone: 651-222-3701

STRUCTURAL: ERA STRUCTURAL ENGINEERING
Eriksen Roed & Associates
2550 University Ave W
Suite 423-S
St. Paul, MN 55114
Phone: 651-251-7570

MEP: DUNHAM
Dunham Associates, Inc.
50 South Sixth St
Suite 1100
Minneapolis, MN 55402
Phone: 612-465-7550

CIVIL: EVS
EVS
10025 Valley View Rd
Suite 140
Eden Prairie, MN 55344
Phone: 952-646-0236

LANDSCAPE: CONFLUENCE
CONFLUENCE
524 N Main Ave
Suite 201
Sioux Falls, SD 57104
Phone: 605-339-1205

## ARCHITECT OF RECORD

**A/E:**
**Stone Group Architects**
**600 E 7th Street**
**Sioux Falls, SD 57103**
**605-271-1144**

STONE GROUP ARCHITECTS

STAMP: REGISTERED PROFESSIONAL ENGINEER — REG. NO. 4750 — MICHAEL A. DOSITT — SOUTH DAKOTA — 06/22/2022

Office of Construction and Facilities Management

VA U.S. Department of Veterans Affairs

| | | | |
|---|---|---|---|
| Drawing Title: GROUND LEVEL FOUNDATION PLAN - AREA B | Phase: CONSTRUCTION DOCUMENTS | Project Title: NEW FRONT LOBBY AND PRIMARY CARE ADDITION | Project Number: VA #438-480, ERA #2020-361 |
| | | | Building Number: 5 |
| Approved: | FOR OFFICIAL USE ONLY | Location: SIOUX FALLS, SOUTH DAKOTA | Drawing Number: SB102 |
| | | Issue Date: 06/22/2022 · Checked: SJC · Drawn: IDB | |

VA FORM 08 - 6231

C:_Revit_Local_ShortTermLocal\20-361_S20_SF_VA Lobby_BevingtonERA.rvt

6/21/2022 4:12:28 PM

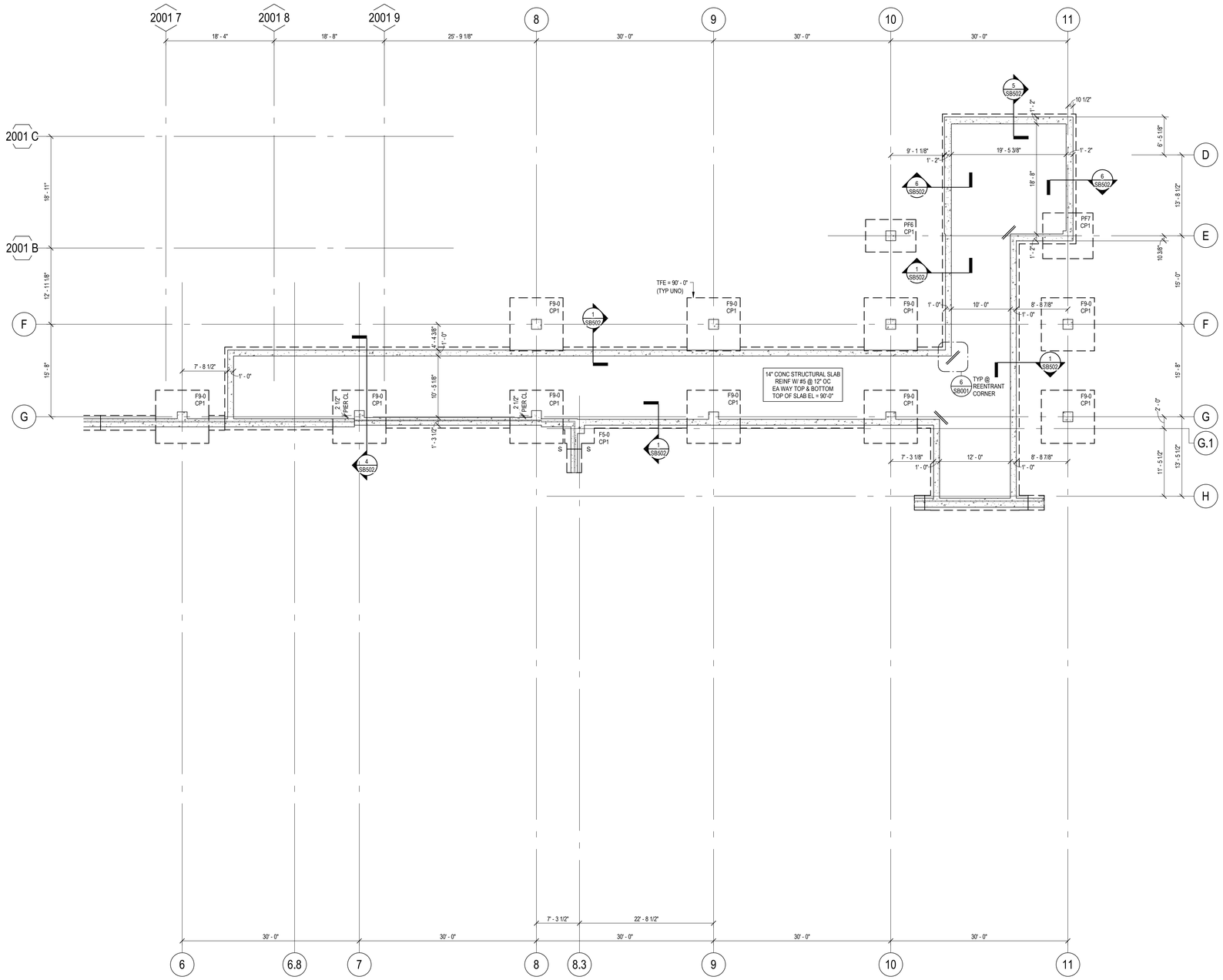


1 SB401 TUNNEL FOUNDATION PLAN
1/8" = 1'-0"

**FOR FOUNDATION PLAN SHEET NOTES SEE SHEET SB101**

| Revision # | Description | Date: |
|---|---|---|
| | | |

## CONSULTANTS

**ARCHITECTURAL:** BWBR
380 St. Peter St
Suite 600
St. Paul, MN 55102
Phone: 651-222-3701

**STRUCTURAL:** ERA Structural Engineering
**Ericksen Roed & Associates**
2550 University Ave W
Suite 423-S
St. Paul, MN 55114
Phone: 651-251-7570

**MEP:** Dunham
**Dunham Associates, Inc.**
50 South Sixth St
Suite 1100
Minneapolis, MN 55402
Phone: 612-465-7550

**CIVIL:** EVS
**EVS**
10025 Valley View Rd
Suite 140
Eden Prairie, MN 55344
Phone: 952-646-0236

**LANDSCAPE:** CONFLUENCE
**CONFLUENCE**
524 N Main Ave
Suite 201
Sioux Falls, SD 57104
Phone: 605-339-1205

## ARCHITECT OF RECORD

**A/E:**
**Stone Group Architects**
**600 E 7th Street**
**Sioux Falls, SD 57103**
**605-271-1144**

STONE GROUP ARCHITECTS

**STAMP**
REGISTERED PROFESSIONAL ENGINEER
REG. NO. 4750
MICHAEL A. DUSTMAN
SOUTH DAKOTA
06/22/2022

Office of Construction and Facilities Management

VA U.S. Department of Veterans Affairs

| Drawing Title | Phase | Project Title | Project Number |
|---|---|---|---|
| TUNNEL PART PLAN | CONSTRUCTION DOCUMENTS | NEW FRONT LOBBY AND PRIMARY CARE ADDITION | VA #438-480<br>ERA #2020-361 |
| Approved: | FOR OFFICIAL USE ONLY | Location: SIOUX FALLS, SOUTH DAKOTA | Building Number: 5 |
| | | Issue Date: 06/22/2022 · Checked: SJC · Drawn: IDB | Drawing Number: SB401 |

VA FORM 08 - 6231

C:_Revit_Local_Central\Local\20-361_S20_SF_VA Lobby_lewinghoeERA.rvt

6/21/2022 4:12:35 PM

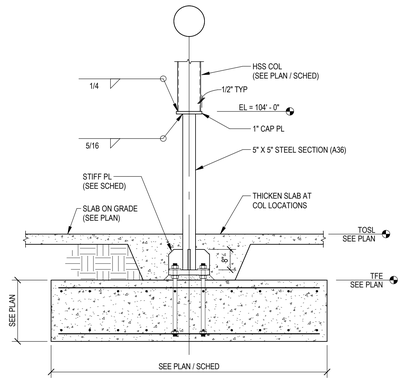


1 SB501 FOUNDATION DETAIL
1/2" = 1'-0"

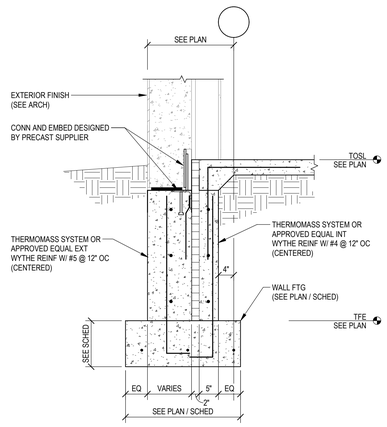


2 SB501 FOUNDATION DETAIL
3/4" = 1'-0"

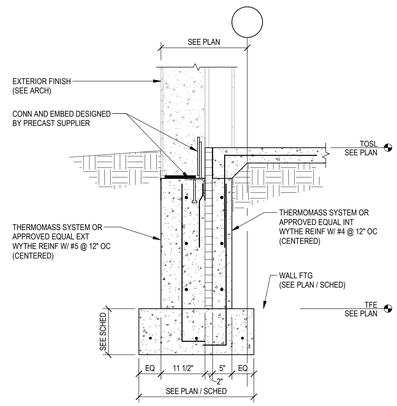


3 SB501 FOUNDATION DETAIL
3/4" = 1'-0"

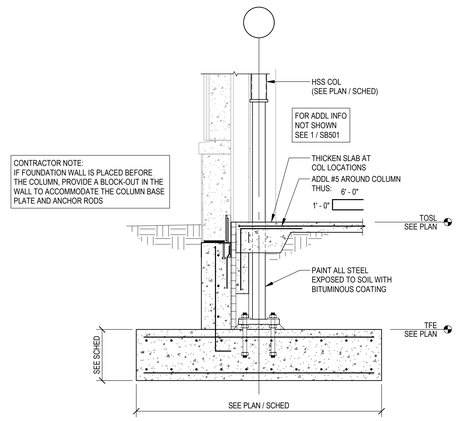


4 SB501 FOUNDATION DETAIL
1/2" = 1'-0"

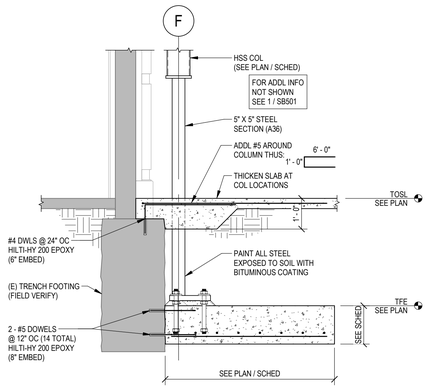


5 SB501 FOUNDATION DETAIL
1/2" = 1'-0"

| Revision # | Description | Date: |
|---|---|---|
| | | |
| | | |
| | | |
| | | |
| | | |
| | | |
| | | |
| | | |

## CONSULTANTS


ARCHITECTURAL: BWBR
380 St. Peter St
Suite 600
St. Paul, MN 55102
Phone: 651-222-3701

STRUCTURAL: ERA STRUCTURAL ENGINEERING
Ericksen Roed & Associates
2550 University Ave W
Suite 423-S
St. Paul, MN 55114
Phone: 651-251-7570

MEP: DUNHAM
Dunham Associates, Inc.
50 South Sixth St
Suite 1100
Minneapolis, MN 55402
Phone: 612-465-7550

CIVIL: EVS
EVS
10025 Valley View Rd
Suite 140
Eden Prairie, MN 55344
Phone: 952-646-0236

LANDSCAPE: CONFLUENCE
CONFLUENCE
524 N Main Ave
Suite 201
Sioux Falls, SD 57104
Phone: 605-339-1205


## ARCHITECT OF RECORD


A/E:
Stone Group Architects
600 E 7th Street
Sioux Falls, SD 57103
605-271-1144

STONE GROUP ARCHITECTS


STAMP

REGISTERED PROFESSIONAL ENGINEER
REG. NO. 4750
MICHAEL A. DEGITTON
SOUTH DAKOTA
06/22/2022

Office of Construction and Facilities Management

VA U.S. Department of Veterans Affairs

Drawing Title: FOUNDATION DETAILS

Phase: CONSTRUCTION DOCUMENTS

Project Title: NEW FRONT LOBBY AND PRIMARY CARE ADDITION

Project Number: VA #438-480 ERA #2020-361

Building Number: 5

Approved:

FOR OFFICIAL USE ONLY

Location: SIOUX FALLS, SOUTH DAKOTA

Issue Date: 06/22/2022

Checked: SJC

Drawn: IDB

Drawing Number: SB501

VA FORM 08 - 6231

C:_Revit_Local_ShortTerm\Local\20-361_S20_SF_VA Lobby_JevingtonERA.rvt

6/21/2022 4:12:43 PM

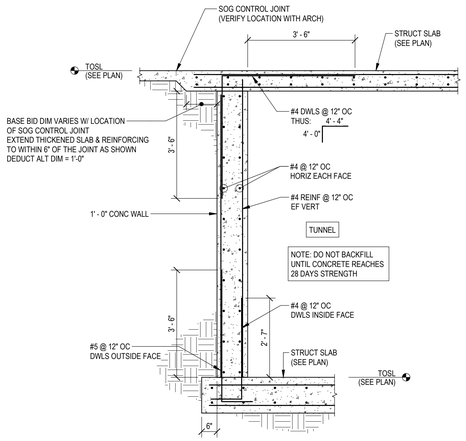


1 SB502 FOUNDATION DETAIL
1/2" = 1'-0"

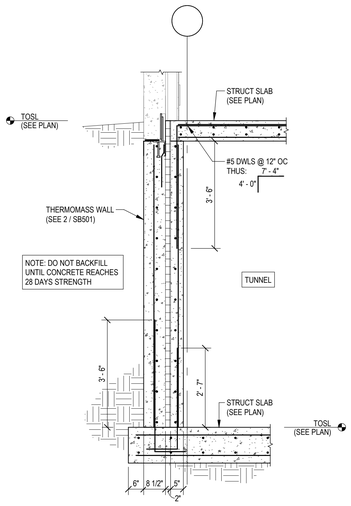


3 SB502 FOUNDATION DETAIL
1/2" = 1'-0"

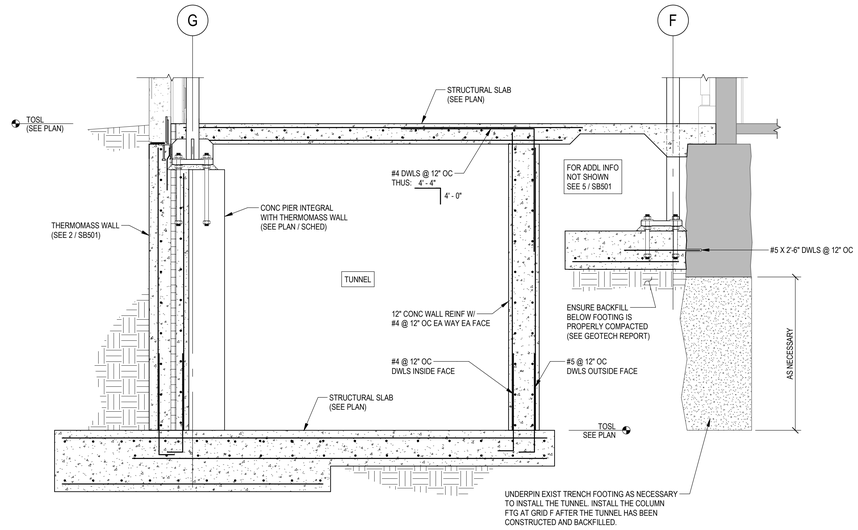


4 SB502 FOUNDATION DETAIL
1/2" = 1'-0"

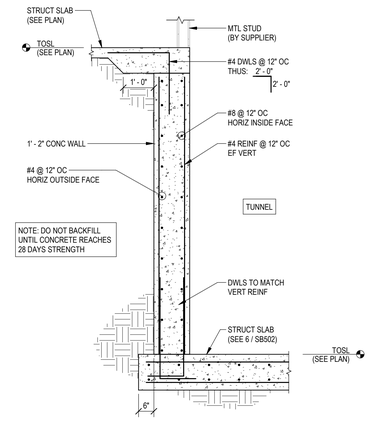


5 SB502 FOUNDATION DETAIL
1/2" = 1'-0"

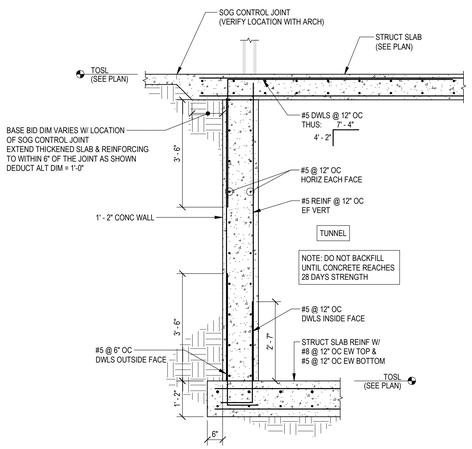


6 SB502 FOUNDATION DETAIL
1/2" = 1'-0"

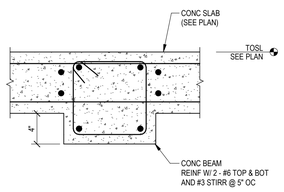


7 SB502 CONCRETE BEAM FRAMING DETAIL
1 1/2" = 1'-0"

| Revision # | Description | Date: |
|---|---|---|
| | | |

## CONSULTANTS

**ARCHITECTURAL:** BWBR
380 St. Peter St
Suite 600
St. Paul, MN 55102
Phone: 651-222-3701

**STRUCTURAL:** ERA STRUCTURAL ENGINEERING
**Ericksen Roed & Associates**
2550 University Ave W
Suite 423-S
St. Paul, MN 55114
Phone: 651-251-7570

**MEP:** DUNHAM
**Dunham Associates, Inc.**
50 South Sixth St
Suite 1100
Minneapolis, MN 55402
Phone: 612-465-7550

**CIVIL:** EVS
**EVS**
10025 Valley View Rd
Suite 140
Eden Prairie, MN 55344
Phone: 952-646-0236

**LANDSCAPE:** CONFLUENCE
**CONFLUENCE**
524 N Main Ave
Suite 201
Sioux Falls, SD 57104
Phone: 605-339-1205

## ARCHITECT OF RECORD

**A/E:**
**Stone Group Architects**
**600 E 7th Street**
**Sioux Falls, SD 57103**
**605-271-1144**

STONE GROUP ARCHITECTS

**STAMP**
REGISTERED PROFESSIONAL ENGINEER
REG. NO. 4750
MICHAEL A. DUITSMAN
SOUTH DAKOTA
06/22/2022

Office of Construction and Facilities Management

VA U.S. Department of Veterans Affairs

| Drawing Title | Phase | Project Title | Project Number |
|---|---|---|---|
| FOUNDATION DETAILS | CONSTRUCTION DOCUMENTS | NEW FRONT LOBBY AND PRIMARY CARE ADDITION | VA #438-480 ERA #2020-361 |
| | | | Building Number: 5 |
| Approved: | FOR OFFICIAL USE ONLY | Location: SIOUX FALLS, SOUTH DAKOTA | Drawing Number: SB502 |
| | | Issue Date: 06/22/2022 · Checked: SJC · Drawn: IDB | |

C:_Revit_Local_Short Term\Local\20-361_S20_SF_VA Lobby_lewinghoeERA.rvt

6/21/2022 4:12:51 PM

VA FORM 08 - 6231

| WALL FOOTING SCHEDULE | | | | |
|---|---|---|---|---|
| | SIZE | | | |
| MARK | WIDTH | THICKNESS | REINFORCEMENT | COMMENTS |
| WF2-6 | 2' - 6" | 1' - 0" | 3 - #5 LONG | |

| COLUMN FOOTING SCHEDULE | | | | | |
|---|---|---|---|---|---|
| | SIZE | | | | |
| MARK | LENGTH | WIDTH | THICKNESS | REINFORCEMENT | COMMENTS |
| F5-0 | 5' - 0" | 5' - 0" | 1' - 0" | 5 - #4 EA WAY BOT | |
| F6-0 | 6' - 0" | 4' - 0" | 1' - 4" | 7 - #5 SHORT AND<br>5 - #5 LONG BOT | |
| F8-0A | 8' - 0" | 8' - 0" | 1' - 8" | 9 - #7 EA WAY TOP & BOT | |
| F8-0B | 8' - 0" | 6' - 0" | 1' - 4" | 9 - #4 SHORT AND 7 - #4 LONG TOP & BOT | |
| F8-6 | 8' - 6" | 6' - 6" | 1' - 3" | 10 - #6 SHORT AND<br>8 - #6 LONG BOT | |
| F9-0 | 9' - 0" | 9' - 0" | 2' - 0" | 10 - #7 EA WAY TOP & BOT | |
| F11-6 | 11' - 6" | 4' - 0" | 1' - 3" | 13 - #6 SHORT AND<br>5 - #6 LONG BOT | |
| F12-0 | 12' - 0" | 6' - 0" | 1' - 8" | 13 - #6 SHORT AND 7 - #6 LONG BOT AND<br>13 - #4 SHORT AND 7 - #4 LONG TOP | |
| F16-0 | 16' - 0" | 8' - 0" | 1' - 8" | 17 - #7 SHORT AND<br>9 - #7 LONG TOP & BOT | |

| CONCRETE PIER SCHEDULE | | | | | | |
|---|---|---|---|---|---|---|
| | SIZE | | REINFORCEMENT | | | |
| MARK | WIDTH | LENGTH | VERTICAL | TIES | TYPE | COMMENTS |
| CP1 | 1' - 8" | 1' - 8" | 4 - #9 | #4 @ 12" OC | 4S | |
| CP2 | 2' - 8" | 3' - 3 1/2" | 8 - #8 | #4 @ 12" OC | 8R | |
| CP3 | 1' - 8 1/2" | 3' - 0 1/2" | 8 - #9 | #4 @ 12" OC | 8R | HOOK LONGITUDINAL BARS<br>180 DEG @ ANCHORS |
| CP4 | 2' - 8 1/2" | 2' - 8 1/2" | 12 - #10 | #4 @ 12" OC | 16R | HOOK LONGITUDINAL BARS<br>180 DEG @ ANCHORS |

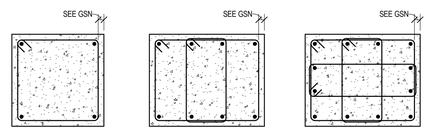


**4S** **8R** **16R**

NOTES:
1. AT TOP OF PIER PROVIDE 5 - ADDITIONAL TIES AT 4" OC AROUND ANCHOR BOLTS UNO.
2. STANDARD HOOK ON VERTICAL REINFORCEMENT INTO FOOTING, DOWELS NOT REQUIRED UNO.

#00600A

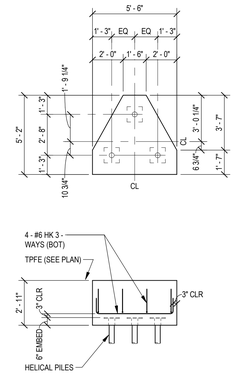


1 SB601 PF3 - PILE FOUNDATION DETAIL
1/4" = 1'-0"

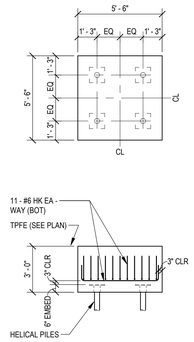


2 SB601 PF4 - PILE FOUNDATION DETAIL
1/4" = 1'-0"

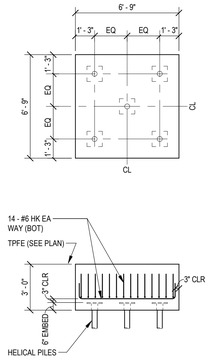


3 SB601 PF5 - PILE FOUNDATION DETAIL
1/4" = 1'-0"

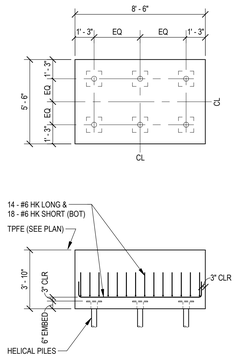


4 SB601 PF6 - PILE FOUNDATION DETAIL
1/4" = 1'-0"

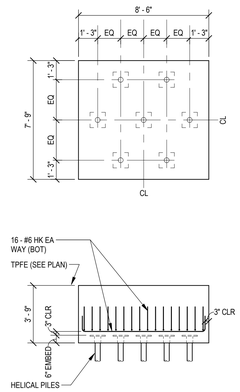


5 SB601 PF7 - PILE FOUNDATION DETAIL
1/4" = 1'-0"

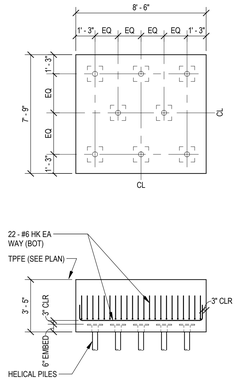


6 SB601 PF8 - PILE FOUNDATION DETAIL
1/4" = 1'-0"

| GRADE BEAM SCHEDULE | | | | | | |
|---|---|---|---|---|---|---|
| | | REINFORCEMENT | | | | |
| MARK | SIZE | BOTTOM | TOP | STIRRUPS | TYPE | COMMENTS |
| GB1 | 18"W x 16"D | 2 - #8 | 4 - #8 | #4 @ 10" OC | 1 | |

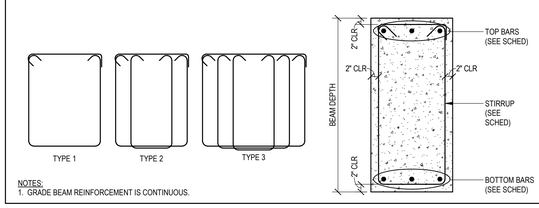


NOTES:
1. GRADE BEAM REINFORCEMENT IS CONTINUOUS.

#00600E

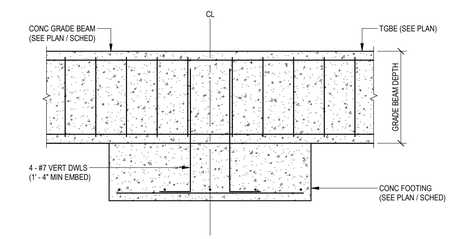


7 SB601 GRADE BEAM - BEARING DETAIL
NO SCALE

| CONCRETE REINFORCEMENT DEVELOPMENT LENGTHS & LAP SPLICE LENGTH TABLE | | | | | | | | | | | | | | | |
|---|---|---|---|---|---|---|---|---|---|---|---|---|---|---|---|
| BAR SIZE | f'c ≥ 3,000 PSI | | f'c ≥ 4,000 PSI | | f'c ≥ 5,000 PSI | | f'c ≥ 6,000 PSI | | f'c ≥ 7,000 PSI | | f'c ≥ 8,000 PSI | | f'c ≥ 9,000 PSI | | f'c ≥ 10,000 PSI | | f'c = ALL |
| | Ld | Ls | Ld | Ls | Ld | Ls | Ld | Ls | Ld | Ls | Ld | Ls | Ld | Ls | Ld | Ls | Lc |
| #3 | 17" | 22" | 15" | 20" | 13" | 17" | 12" | 16" | 12" | 16" | 12" | 16" | 12" | 16" | 12" | 16" | 12" |
| #4 | 22" | 29" | 19" | 25" | 17" | 22" | 16" | 21" | 15" | 20" | 14" | 18" | 13" | 17" | 12" | 16" | 15" |
| #5 | 28" | 36" | 24" | 31" | 22" | 29" | 20" | 26" | 18" | 23" | 17" | 22" | 16" | 21" | 15" | 20" | 19" |
| #6 | 33" | 43" | 29" | 38" | 26" | 34" | 24" | 31" | 22" | 29" | 21" | 27" | 19" | 25" | 18" | 23" | 23" |
| #7 | 48" | 62" | 42" | 55" | 38" | 49" | 34" | 44" | 32" | 42" | 30" | 39" | 28" | 36" | 27" | 35" | 27" |
| #8 | 55" | 72" | 48" | 62" | 43" | 56" | 39" | 51" | 36" | 47" | 34" | 44" | 32" | 42" | 30" | 39" | 30" |
| #9 | 62" | 81" | 54" | 70" | 48" | 62" | 44" | 57" | 41" | 53" | 38" | 49" | 36" | 47" | 34" | 44" | 34" |
| #10 | 70" | 91" | 61" | 79" | 54" | 70" | 50" | 65" | 46" | 60" | 43" | 56" | 41" | 53" | 39" | 51" | 39" |
| #11 | 78" | 101" | 61" | 87" | 60" | 78" | 55" | 72" | 51" | 66" | 48" | 62" | 54" | 59" | 43" | 56" | 43" |

NOTES

Ld = CLASS 'A' LAP SPLICE / DEVELOPMENT LENGTH
Ls = CLASS 'B' LAP SPLICE
Lc = COMPRESSION LAP SPLICE
db = BAR DIAMETER

1. WHERE SPLICES ARE NOT CALLED OUT ON THE DRAWINGS, PROVIDE CLASS B LAP SPLICE (Ls)
2. FOR LIGHT WEIGHT CONCRETE, MULTIPLY LENGTHS BY 1.3.
3. FOR EPOXY BARS, MULTIPLY LENGTHS BY 1.5.
4. FOR HORIZONTAL BARS WITH 12" OF FRESHLY PLACED CONCRETE BELOW, MULTIPLY LENGTHS BY 1.3.
5. WHERE NOTE 3 AND NOTE 4 BOTH APPLY, MULTIPLY LENGTHS BY 1.7.
6. MECHANICAL SPLICES WITH 125% OF BAR YIELD STRENGTH MAY BE USED IN LIEU OF LAPS.

DETAILS

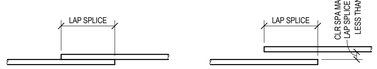


**CONTACT LAP SPLICE (PREFERRED)** **NON-CONTACT LAP SPLICE**

#00600F

| CONCRETE REINFORCEMENT EMBEDMENT LENGTHS FOR STANDARD HOOKS | | | | | | | | |
|---|---|---|---|---|---|---|---|---|
| BAR SIZE | f'c ≥ 3,000 PSI | f'c ≥ 4,000 PSI | f'c ≥ 5,000 PSI | f'c ≥ 6,000 PSI | f'c ≥ 7,000 PSI | f'c ≥ 8,000 PSI | f'c ≥ 9,000 PSI | f'c ≥ 10,000 PSI |
| #3 | 6" | 6" | 6" | 6" | 6" | 6" | 6" | 6" |
| #4 | 8" | 7" | 6" | 6" | 6" | 6" | 6" | 6" |
| #5 | 10" | 9" | 8" | 7" | 7" | 6" | 6" | 6" |
| #6 | 12" | 10" | 9" | 9" | 8" | 8" | 7" | 7" |
| #7 | 14" | 12" | 11" | 10" | 9" | 9" | 8" | 8" |
| #8 | 16" | 14" | 12" | 11" | 11" | 10" | 9" | 9" |
| #9 | 18" | 15" | 14" | 13" | 12" | 11" | 10" | 10" |
| #10 | 20" | 17" | 16" | 14" | 13" | 12" | 12" | 11" |
| #11 | 22" | 19" | 17" | 16" | 15" | 14" | 13" | 12" |

NOTES

Ldh = DEVELOPMENT LENGTH OF HOOK
db = BAR DIAMETER

1. MULTIPLY LENGTHS BY 1.5 WHERE ANY OF THE FOLLOWING OCCUR:
   - SIDE COVER ≤ 2 1/2".
   - END COVER ≤ 2".
2. FOR LIGHT WEIGHT CONCRETE, MULTIPLY LENGTHS BY 1.3.
3. FOR EPOXY BARS, MULTIPLY LENGTHS BY 1.2.

DETAILS

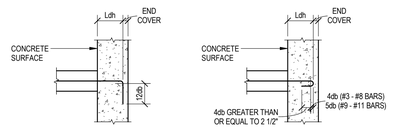


**90 DEGREE HOOK** **180 DEGREE HOOK**

#00600G

| Revision # | Description | Date: |
|---|---|---|
| | | |

C:_Revit_Local_Local_ShortTerm\Local\20-361_S20_SF_VA Lobby_dewright\ERA.rvt

VA FORM 08 - 6231

## CONSULTANTS


ARCHITECTURAL: BWBR
380 St. Peter St
Suite 600
St. Paul, MN 55102
Phone: 651-222-3701

STRUCTURAL: ERA STRUCTURAL ENGINEERING
Ericksen Roed & Associates
2550 University Ave W
Suite 423-S
St. Paul, MN 55114
Phone: 651-251-7570

MEP: DUNHAM
Dunham Associates, Inc.
50 South Sixth St
Suite 1100
Minneapolis, MN 55402
Phone: 612-465-7550

CIVIL: EVS
EVS
10025 Valley View Rd
Suite 140
Eden Prairie, MN 55344
Phone: 952-646-0236

LANDSCAPE: CONFLUENCE
CONFLUENCE
524 N Main Ave
Suite 201
Sioux Falls, SD 57104
Phone: 605-339-1205


## ARCHITECT OF RECORD


**A/E:**
**Stone Group Architects**
**600 E 7th Street**
**Sioux Falls, SD 57103**
**605-271-1144**

STONE GROUP ARCHITECTS


STAMP

REGISTERED PROFESSIONAL ENGINEER
REG. NO. 4750
MICHAEL A. DEWRIGHT
SOUTH DAKOTA
06/22/2022

Office of Construction and Facilities Management

VA U.S. Department of Veterans Affairs

| | |
|---|---|
| Drawing Title | FOUNDATION SCHEDULES |
| Phase | CONSTRUCTION DOCUMENTS |
| Approved: | FOR OFFICIAL USE ONLY |
| Project Title | NEW FRONT LOBBY AND PRIMARY CARE ADDITION |
| Project Number | VA #438-480<br>ERA #2020-361 |
| Building Number | 5 |
| Location | SIOUX FALLS, SOUTH DAKOTA |
| Issue Date | 06/22/2022 |
| Checked | SJC |
| Drawn | IDB |
| Drawing Number | SB601 |

6/21/2022 4:13:00 PM

BEAM CONNECTION INFORMATION

1. ALL STEEL BEAM CONNECTIONS SHALL BE DESIGNED BY THE STEEL FABRICATOR FOR THE CRITERIA IDENTIFIED IN THE DESIGN DRAWINGS, UNLESS FULLY DETAILED IN THE DRAWINGS.

2. BEAM TO BEAM CONNECTIONS MAY BE SINGLE OR DOUBLE SIDED CONNECTIONS DESIGNED USING BEAM CONNECTION CRITERIA. FOR ADDL INFO SEE 2 / SF001

3. BEAM TO WIDE FLANGE COLUMN CONNECTIONS SHALL BE DOUBLE SIDED CONNECTIONS DESIGNED USING GIRDER CONNECTION CRITERIA. FOR ADDL INFO SEE 2 / SF001

4. BEAM TO HSS COLUMN CONNECTIONS MAY BE SINGLE OR DOUBLE SIDED CONNECTIONS DESIGNED USING GIRDER CONNECTION CRITERIA. FOR ADDL INFO SEE 2 / SF001

5. BEAM TO EMBED PLATE CONNECTIONS SHALL BE DOUBLE SIDED CONNECTIONS DESIGNED USING GIRDER CONNECTION CRITERIA. FOR ADDL INFO SEE

6. SKEWED BEAM TO WIDE FLANGE COLUMN CONNECTIONS SHALL BE END PLATE CONNECTIONS DESIGNED USING GIRDER CONNECTION CRITERIA.
FOR ADDL INFO SEE 2 / SF001

7. NECESSARY PROVISIONS SHALL BE MADE TO COMPLY WITH OSHA REQUIREMENTS.

8. THE ELEMENTS SHOWN IN TYPICAL CONNECTION DETAILS ARE A GRAPHIC REPRESENTATION ONLY AND SHOULD NOT BE USED FOR BIDDING OR CONSTRUCTION.

1 SF001 STEEL - BEAM CONNECTION NOTES #02201
NO SCALE

V = BEAM SHEAR REACTION PER TABLE OR SHOWN ON PLAN

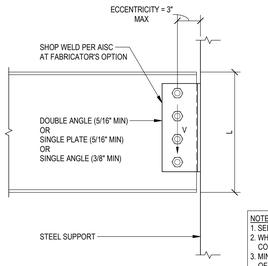


| MINIMUM LRFD DESIGN SHEAR (V) KIPS | | |
|---|---|---|
| BEAM SIZE | GIRDER CONNECTION | BEAM CONNECTION |
| W8, C8 | 30 | 16 |
| W10, C10 | 33 | 20 |
| W12, C12 | 53 | 26 |
| W14 | 60 | 36 |
| W16 | 64 | 48 |
| W18 | 105 | 48 |
| W21 | 120 | 64 |
| W24 | 125 | 64 |
| W27 | 150 | 80 |
| W30 | 185 | 95 |
| W33 | 185 | 110 |
| W36 | 215 | 125 |
| W40 | 245 | 140 |
| W44 | 275 | 155 |

NOTES:
1. SEE BEAM CONNECTION INFORMATION THIS SHEET FOR ADDITIONAL NOTES.
2. WHERE END REACTIONS ARE NOT SHOWN ON PLAN, FABRICATOR SHALL DESIGN CONNECTIONS FOR THE MINIMUM DESIGN SHEARS LISTED ABOVE.
3. MINIMUM CONNECTION LENGTH ( L ) SHALL BE ONE HALF THE "T" DIMENSION OF THE BEAM TO BE SUPPORTED.
4. CONNECTIONS SHALL BE DESIGNED IN ACCORDANCE WITH AISC 360 USING LRFD METHODS.

2 SF001 STEEL - WF SHEAR CONNECTION CRITERIA #02202
NO SCALE

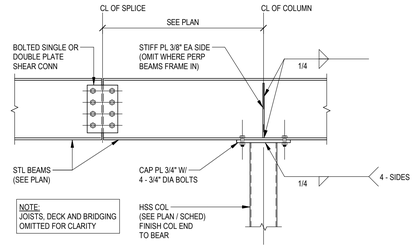


NOTE:
JOISTS, DECK AND BRIDGING OMITTED FOR CLARITY

3 SF001 STEEL - BEAM SPLICE AT HSS COLUMN - SHEAR CONNECTION
NO SCALE

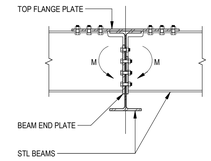


NOTES:
1. CONNECTION SHALL BE DESIGNED BY THE STEEL FABRICATOR FOR FOR THE FORCES INDICATED ON PLAN. WHERE SHEAR FORCE IS NOT SHOWN ON PLAN, USE MINIMUM GIRDER SHEAR FORCE AS SHOWN IN THE SHEAR CONNECTION CRITERIA DETAILS.

2. MOMENT **IS NOT** REVERSIBLE.

3. CONTRACTOR'S OPTION: TOP FLANGES MAY BE CJP WELDED TO GIRDER DIRECTLY.

4 SF001 STEEL - CANTILEVER MOMENT CONN TO GIRDER #02208
NO SCALE

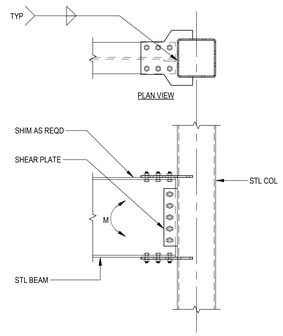


NOTES:
1. CONNECTION SHALL BE DESIGNED BY THE STEEL FABRICATOR FOR THE FORCES INDICATED ON PLAN. WHERE SHEAR FORCE IS NOT SHOWN ON PLAN, USE MINIMUM GIRDER SHEAR FORCE AS SHOWN IN THE SHEAR CONNECTION CRITERIA DETAILS.

2. MOMENT **IS** REVERSIBLE.

3. CONTRACTOR'S OPTION: FLANGES MAY BE CJP WELDED TO COLUMN DIRECTLY.

5 SF001 STEEL - MOMENT FRAME CONN TO HSS COL #02211
NO SCALE

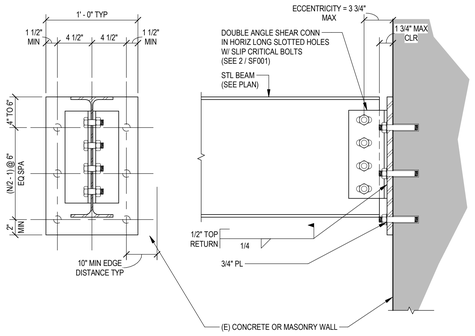


| EMBED CONNECTION SCHEDULE | | | | |
|---|---|---|---|---|
| BEAM SIZE | (E) WALL | NUMBER OF ANCHORS | TYPE OF ANCHOR | EMBED |
| W8, W10, W12, W14 | CONCRETE | 4 | 1/2" KB-TZ | 3 1/4" |
| | CMU | 6 | 3/4" KB-3 | 3 1/4" |
| W16 | CMU | 8 | 3/4" KB-3 | 3 1/4" |

NOTES:
1. METAL DECK NOT SHOWN FOR CLARITY.

2. LOCATE EXISTING REINFORCING PRIOR TO DRILLING, **DO NOT DAMAGE.**

3. GROUT CMU CORES SOLID AT ALL ANCHORS.

6 SF001 STEEL - CONN TO (E) STRUCTURE
NO SCALE

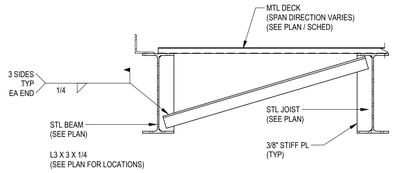


7 SF001 STEEL - TYPICAL ANGLE BRACE CONN
3/4" = 1'-0"

| Revision # | Description | Date: |
|---|---|---|
| | | |

CONSULTANTS

ARCHITECTURAL: BWBR
380 St. Peter St
Suite 600
St. Paul, MN 55102
Phone: 651-222-3701

STRUCTURAL: ERA STRUCTURAL ENGINEERING
Ericksen Roed & Associates
2550 University Ave W
Suite 423-S
St. Paul, MN 55114
Phone: 651-251-7570

MEP: DUNHAM
Dunham Associates, Inc.
50 South Sixth St
Suite 1100
Minneapolis, MN 55402
Phone: 612-465-7550

CIVIL: EVS
EVS
10025 Valley View Rd
Suite 140
Eden Prairie, MN 55344
Phone: 952-646-0236

LANDSCAPE: CONFLUENCE
CONFLUENCE
524 N Main Ave
Suite 201
Sioux Falls, SD 57104
Phone: 605-339-1205

ARCHITECT OF RECORD
A/E:
Stone Group Architects
600 E 7th Street
Sioux Falls, SD 57103
605-271-1144
STONE GROUP ARCHITECTS

STAMP
REGISTERED PROFESSIONAL ENGINEER
REG. NO. 4750
MICHAEL A. DESJITTON
SOUTH DAKOTA
06/21/2022

Office of Construction and Facilities Management
VA U.S. Department of Veterans Affairs

Drawing Title: TYPICAL DETAILS - STEEL CONNECTION
Approved:
Phase: CONSTRUCTION DOCUMENTS
FOR OFFICIAL USE ONLY
Project Title: NEW FRONT LOBBY AND PRIMARY CARE ADDITION
Location: SIOUX FALLS, SOUTH DAKOTA
Issue Date: 06/22/2022
Checked: SJC
Drawn: IDB
Project Number: VA #438-480 ERA #2020-361
Building Number: 5
Drawing Number: SF001

VA FORM 08 - 6231

C:_Revit_Local_ShortTermLocal\20-361_S20_SF_VA Lobby_Jennington!ERA.rvt
6/21/2022 4:13:15 PM

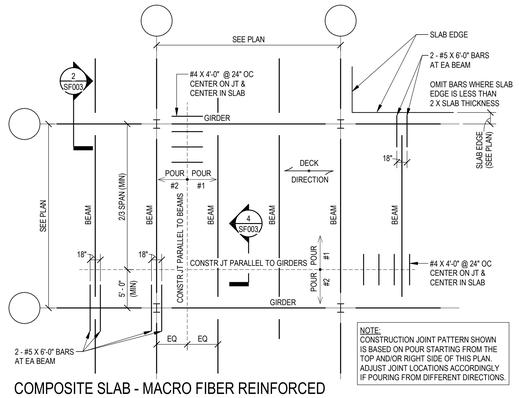


1 SF003 COMPOSITE SLAB - MACRO FIBER REINFORCED SUGGESTED CONSTRUCTION JOINT LOCATIONS #02101 NO SCALE

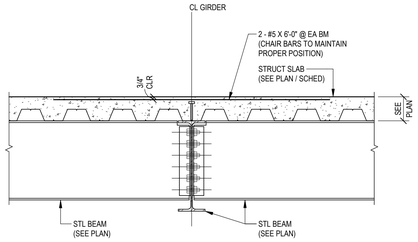


2 SF003 COMPOSITE SLAB - AT GIRDER #02102 NO SCALE

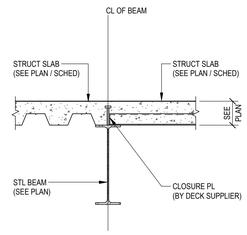


3 SF003 COMPOSITE SLAB - DECK DIRECTION CHANGE #02104 NO SCALE

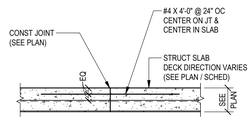


4 SF003 COMPOSITE SLAB - AT CONSTRUCTION JOINT #02103 NO SCALE

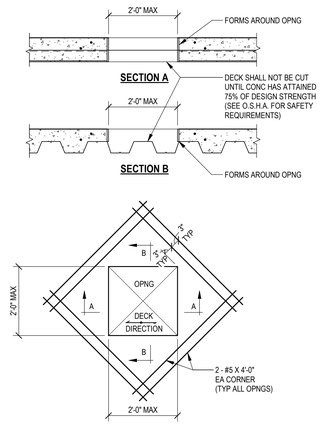


NOTE:

1. SEE FRAMED OPENING DETAIL FOR OPENINGS GREATER THAN 2'-0".
2. SEE STRUCTURAL PLANS FOR SLAB OPENING LOCATIONS KNOWN AT TIME OF ISSUE.
3. SEE ARCH, MECH, AND ELECT DRAWINGS FOR QUANTITIES SIZES, AND LOCATIONS OF SLAB OPENINGS.
4. SEE GENERAL STRUCTURAL NOTES.

5 SF003 COMPOSITE SLAB - SLAB OPENING #02105 NO SCALE

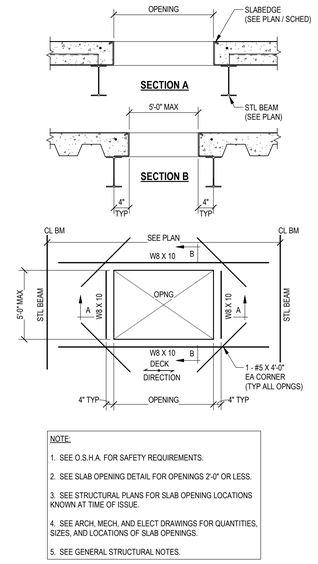


NOTE:

1. SEE O.S.H.A. FOR SAFETY REQUIREMENTS.
2. SEE SLAB OPENING DETAIL FOR OPENINGS 2'-0" OR LESS.
3. SEE STRUCTURAL PLANS FOR SLAB OPENING LOCATIONS KNOWN AT TIME OF ISSUE.
4. SEE ARCH, MECH, AND ELECT DRAWINGS FOR QUANTITIES, SIZES, AND LOCATIONS OF SLAB OPENINGS.
5. SEE GENERAL STRUCTURAL NOTES.

6 SF003 COMPOSITE SLAB - FRAMED OPENING #02106 NO SCALE

METAL DECK / CONCRETE SLAB SCHEDULE

| MARK | DECK | | | HEADED STUDS | | CONCRETE | | | TOTAL THICKNESS |
|---|---|---|---|---|---|---|---|---|---|
| | THICKNESS | GAGE | DESCRIPTION | DIAMETER | LENGTH | THICKNESS | TYPE | REINFORCING | |
| CS1 | 2" | 18 | COMPOSITE | 3/4" | 4" | 4" | NWT | 4 LBS MACRO FIBER / CU YD CONC | 6" |

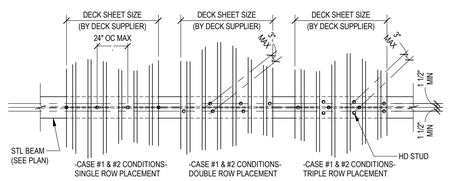


CASE #1 (FEWER STUDS THAN DECK VALLEY FLUTES):
- PLACE A STUD IN ALTERNATING FLUTES FOR ENTIRE LENGTH OF BEAM. PLACE REMAINING STUDS IN FLUTES NOT ALREADY HAVING A STUD, STARTING AT EACH BEAM END AND CONTINUING TOWARDS THE BEAM CENTER.

CASE #2 (MORE STUDS THAN DECK VALLEY FLUTES):
- PLACE A STUD IN ALL AVAILABLE FLUTES, IF STUDS REMAIN, PLACE A SECOND STUD IN FLUTES AT EA BEAM END AND CONTINUE PLACING A SECOND STUD IN EACH FLUTE TOWARDS THE BEAM CENTER. IF STUDS REMAIN , PLACE A THIRD STUD IN FLUTES AT THE BEAM ENDS AND CONTINUE PLACING A THIRD STUD IN EACH FLUTE TOWARDS THE BEAM CENTER.

CASE #3 (DECK PARALLEL TO BEAM):
- PLACE A SINGLE ROW OF STUDS ALONG BEAM (GIRDER) AT EQUAL SPACING. IF SPACING IS LESS THAN 4 1/2", USE DOUBLE OR TRIPLE ROWS AS REQUIRED STARTING AT THE BEAM ENDS WORKING TOWARDS THE CENTER OF THE BEAM.

NOTES:
- ALL STUDS SHALL BE PLACED IN ACCORDANCE TO AISC RECOMMENDATIONS.
- ALL COMPOSITE DECK STUDS SHALL BE AS INDICATED IN SCHEDULE.
- (X) INDICATES NUMBER OF STUDS TO BE PLACED ON THE BEAM, SEE PLAN.
- STUDS SHALL NOT BE SPACED CLOSER THAN 4 1/2" OC ALONG THE BEAM.
- STUDS SHALL NOT BE SPACED FARTHER THAN 24" OC ALONG THE BEAM.
- STUDS SHALL BE PLACED 7/8" MINIMUM FROM THE BEAM FLANGE EDGE TO THE OUTER SIDE OF THE STUD EDGE.
- STUDS SHALL BE PLACED IN THE VALLEY DECK FLUTES WHICH ARE IN CONTACT WITH THE STEEL BEAM.
- GENERALLY PLACE THE FIRST STUD(S) 12" FROM THE COLUMN CENTER LINE.
- STUDS SHALL NOT BE WELDED THROUGH OVERLAPPING DECK CONDITIONS. STAGGER STUDS ALONG BEAM CENTERLINE AS SHOWN AT DECK JOINTS.
- COMPOSITE METAL DECK SHALL BE FASTENED TO THE STEEL STRUCTURE WITH 5/8" PUDDLE WELDS IN A 36/4 PATTERN. SIDELAPS SHALL BE #10 TEK SCREWS OR BUTTON PUNCHES AT 12" OC.
- PROVIDE DECK WITH MINIMUM SECTION PROPERTIES INDICATED IN TABLES, BASED ON SCHEDULED THICKNESS AND GAGE.

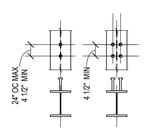


-CASE #3 CONDITIONS-

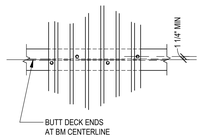


SUGGESTED SHEAR STUD LAYOUT

| DECK TYPE | SECTION PROPERTIES | | | |
|---|---|---|---|---|
| | Ip - in^4/ft | Sp - in^3/ft | In - in^4/ft | Sn - in^3/ft |
| 2" - 22 GA | 0.314 | 0.244 | 0.314 | 0.254 |
| 2" - 20 GA | 0.403 | 0.326 | 0.402 | 0.337 |
| 2" - 19 GA | 0.489 | 0.409 | 0.487 | 0.421 |
| 2" - 18 GA | 0.559 | 0.485 | 0.558 | 0.500 |
| 2" - 16 GA | 0.704 | 0.653 | 0.704 | 0.653 |

| DECK TYPE | SECTION PROPERTIES | | | |
|---|---|---|---|---|
| | Ip - in^4/ft | Sp - in^3/ft | In - in^4/ft | Sn - in^3/ft |
| 3" - 22 GA | 0.710 | 0.387 | 0.715 | 0.410 |
| 3" - 20 GA | 0.907 | 0.512 | 0.909 | 0.538 |
| 3" - 19 GA | 1.098 | 0.639 | 1.100 | 0.668 |
| 3" - 18 GA | 1.252 | 0.761 | 1.252 | 0.794 |
| 3" - 16 GA | 1.582 | 1.013 | 1.582 | 1.013 |

#02100A

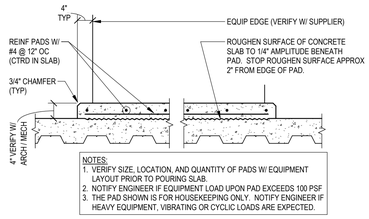


NOTES:
1. VERIFY SIZE, LOCATION, AND QUANTITY OF PADS W/ EQUIPMENT LAYOUT PRIOR TO POURING SLAB.
2. NOTIFY ENGINEER IF EQUIPMENT LOAD UPON PAD EXCEEDS 100 PSF
3. THE PAD SHOWN IS FOR HOUSEKEEPING ONLY. NOTIFY ENGINEER IF HEAVY EQUIPMENT, VIBRATING OR CYCLIC LOADS ARE EXPECTED.

7 SF003 COMPOSITE SLAB - HOUSE KEEPING PAD #02108 NO SCALE

| Revision # | Description | Date: |
|---|---|---|
| | | |

CONSULTANTS

ARCHITECTURAL: BWBR, 380 St. Peter St, Suite 600, St. Paul, MN 55102, Phone: 651-222-3701

STRUCTURAL: ERA Structural Engineering — Ericksen Roed & Associates, 2550 University Ave W, Suite 423-S, St. Paul, MN 55114, Phone: 651-251-7570

MEP: Dunham — Dunham Associates, Inc., 50 South Sixth St, Suite 1100, Minneapolis, MN 55402, Phone: 612-465-7550

CIVIL: EVS — EVS, 10025 Valley View Rd, Suite 140, Eden Prairie, MN 55344, Phone: 952-646-0236

LANDSCAPE: Confluence — CONFLUENCE, 524 N Main Ave, Suite 201, Sioux Falls, SD 57104, Phone: 605-339-1205

ARCHITECT OF RECORD

A/E:
Stone Group Architects
600 E 7th Street
Sioux Falls, SD 57103
605-271-1144

STONE GROUP ARCHITECTS

STAMP: REGISTERED PROFESSIONAL ENGINEER — REG. NO. 4750 — MICHAEL A. DESJITHAM — SOUTH DAKOTA — 06/22/2022

Office of Construction and Facilities Management

VA U.S. Department of Veterans Affairs

Drawing Title: TYPICAL DETAILS - STEEL COMPOSITE

Phase: CONSTRUCTION DOCUMENTS

Approved:

FOR OFFICIAL USE ONLY

Project Title: NEW FRONT LOBBY AND PRIMARY CARE ADDITION

Location: SIOUX FALLS, SOUTH DAKOTA

Issue Date: 06/22/2022 | Checked: SJC | Drawn: IDB

Project Number: VA #438-480, ERA #2020-361

Building Number: 5

Drawing Number: SF003

VA FORM 08 - 6231

C:_Revit_Local_ShortTerm\Local\20-361_S20_SF_VA Lobby_BenningtonERA.rvt

6/21/2022 4:13:22 PM

| METAL DECK SCHEDULE | | | | | |
|---|---|---|---|---|---|
| | DECK | | | FASTENING | |
| MARK | THICKNESS | GAGE | TYPE | WELD PATTERN | SIDE LAPS |
| D1 | 1 1/2" | 20 | B | 36/4 | 4 PER SPAN |

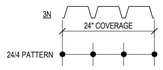


**TYPICAL FASTENER LAYOUT**

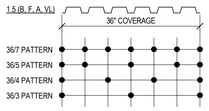


**TYPICAL FASTENER LAYOUT**

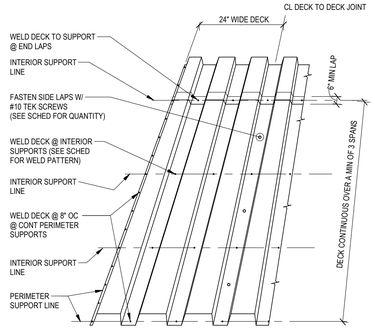


**3" ROOF DECK DIAGRAM**

NOTES:
1. ALL WELDS SHALL BE 5/8" DIA PUDDLE WELDS (UNO).
2. ATTACH DECK @ 8"OC TO STEEL SUPPORTS AROUND PERIMETER OF ALL OPENINGS.
3. ENGINEER IS TO BE NOTIFIED IF 24" WIDE DECK IS NOT USED.

| DECK TYPE | SECTION PROPERTIES | | | |
|---|---|---|---|---|
| | Ip - in^4/ft | Sp - in^3/ft | In - in^4/ft | Sn - in^3/ft |
| 3N - 22 GA | 0.659 | 0.382 | 0.884 | 0.433 |
| 3N - 20 GA | 0.848 | 0.501 | 1.079 | 0.552 |
| 3N - 19 GA | 1.045 | 0.597 | 1.260 | 0.659 |
| 3N - 18 GA | 1.238 | 0.688 | 1.430 | 0.749 |
| 3N - 16 GA | 1.683 | 0.893 | 1.807 | 0.944 |

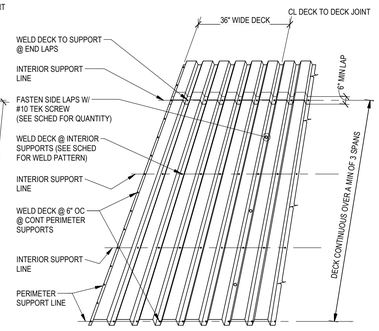


**1 1/2" ROOF DECK DIAGRAM**

NOTES:
1. ALL WELDS SHALL BE 5/8" DIA PUDDLE WELDS (UNO).
2. ATTACH DECK @ 6" OC TO STEEL SUPPORTS AROUND PERIMETER OF ALL OPENINGS.
3. ENGINEER IS TO BE NOTIFIED IF 36" WIDE DECK IS NOT USED.

| DECK TYPE | SECTION PROPERTIES | | | |
|---|---|---|---|---|
| | Ip - in^4/ft | Sp - in^3/ft | In - in^4/ft | Sn - in^3/ft |
| 1.5B - 24 GA | 0.107 | 0.120 | 0.135 | 0.131 |
| 1.5B - 22 GA | 0.155 | 0.186 | 0.183 | 0.192 |
| 1.5B - 20 GA | 0.201 | 0.234 | 0.222 | 0.247 |
| 1.5B - 19 GA | 0.246 | 0.277 | 0.260 | 0.289 |
| 1.5B - 18 GA | 0.289 | 0.318 | 0.295 | 0.327 |
| 1.5B - 16 GA | 0.373 | 0.408 | 0.373 | 0.411 |

#02000D

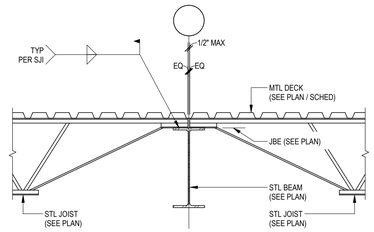


1 SF004 STEEL JST - BEARING ON BEAM #02306 NO SCALE

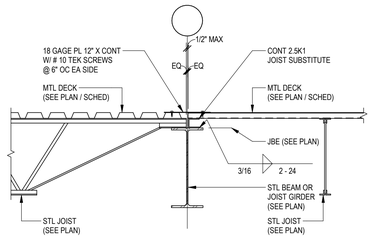


2 SF004 STEEL JST - DECK DIRECTION CHANGE #02303 NO SCALE

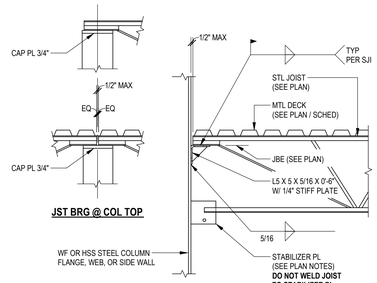


3 SF004 STEEL JST - BEARING AT COLUMN #02304 NO SCALE

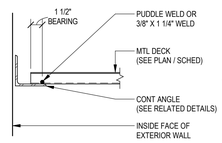


**DECK SPAN PERPENDICULAR TO EXTERIOR WALL**

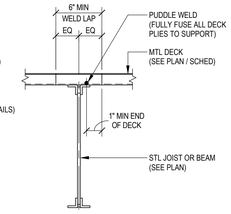


**DECK LAP AT SUPPORT**

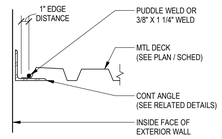


**DECK SPAN PARALLEL TO EXTERIOR WALL**

4 SF004 DECK WELDING 1 1/2" = 1'-0"

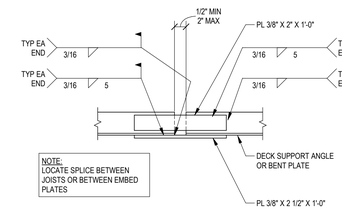


NOTE:
LOCATE SPLICE BETWEEN JOISTS OR BETWEEN EMBED PLATES

5 SF004 STEEL - DECK SUPPORT SPLICE #02003 NO SCALE

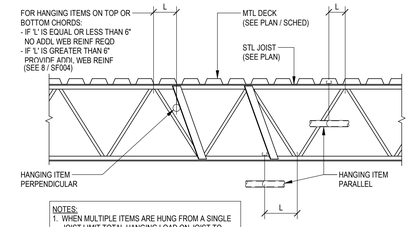


NOTES:
1. WHEN MULTIPLE ITEMS ARE HUNG FROM A SINGLE JOIST LIMIT TOTAL HANGING LOAD ON JOIST TO 250 LBS UNLESS INDICATED OTHERWISE ON PLAN.
2. DUCTWORK, PIPES & OTHER EQUIPMENT SHALL NOT BE HUNG FROM THE ROOF DECK - **NO EXCEPTIONS.**

6 SF004 STEEL JST - HANGING ITEMS #02321 NO SCALE

NOTE TO MECHANICAL CONTRACTOR: RIBS ARE SPACED AT 6" CENTERS

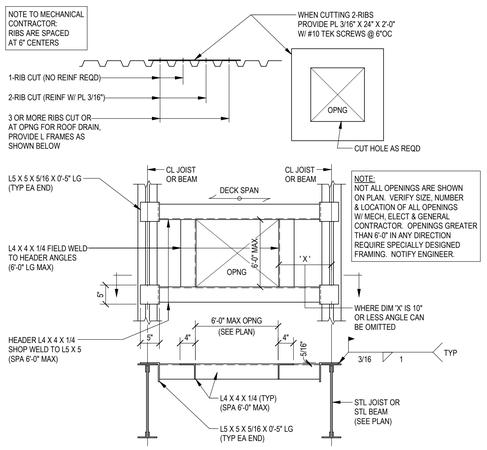


NOTE:
NOT ALL OPENINGS ARE SHOWN ON PLAN. VERIFY SIZE, NUMBER & LOCATION OF ALL OPENINGS W/ MECH, ELECT & GENERAL CONTRACTOR. OPENINGS GREATER THAN 6'-0" IN ANY DIRECTION REQUIRE SPECIALLY DESIGNED FRAMING. NOTIFY ENGINEER.

NOTES:
1. SEE STRUCTURAL PLANS FOR ROOF OPENING LOCATIONS KNOWN AT TIME OF ISSUE.
2. SEE ARCH, MECH, AND ELECT DRAWINGS FOR QUANTITIES, SIZES, AND LOCATIONS OF DECK OPENINGS.
3. METAL DECK OMITTED FOR CLARITY. SEE PLAN / SCHED FOR WELDING PATTERNS. SEE O.S.H.A. FOR SAFETY REQUIREMENTS

7 SF004 ROOF FRAME FOR OPNG IN MTL ROOF DECK #02301 NO SCALE

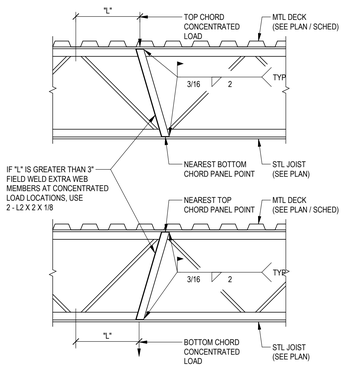


NOTES:
1. JOIST CHORDS ARE NOT DESIGNED FOR CONCENTRATED LOADS IN EXCESS OF 100 POUNDS. EITHER PLACE LOADS AT PANEL POINTS OR ADD EXTRA WEB MEMBERS FROM POINT OF LOAD TO NEAREST PANEL POINT ON OPPOSITE CHORD.
2. CONTRACTOR TO VERIFY LOADS & LOCATION FOR EQUIPMENT SELECTED WITH INFORMATION SHOWN ON PLAN. NOTIFY STRUCTURAL ENGINEER & JOIST SUPPLIER OF ALL CHANGED CONDITIONS.
3. WELD REINFORCEMENT TO JOIST AFTER FULL DEAD LOAD IS IN PLACE.

8 SF004 STEEL JST - REINF AT CONCENTRATED LOAD #02302 NO SCALE

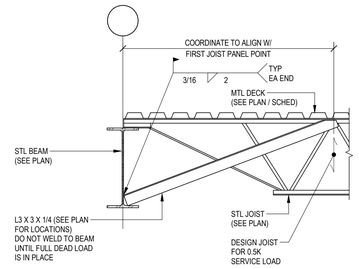


STEEL JST - BEAM BOTTOM FLANGE BRACING - JOIST PERPENDICULAR
9 SF004 NO SCALE

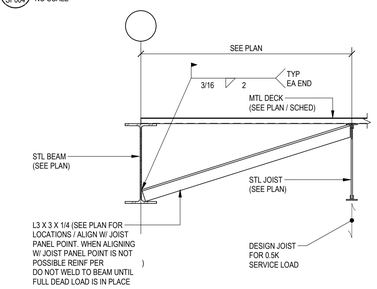


STEEL JST - BEAM BOTTOM FLANGE BRACING - JOIST PARALLEL
10 SF004 NO SCALE

| Revision # | Description | Date: |
|---|---|---|
| | | |

CONSULTANTS

ARCHITECTURAL: BWBR, 380 St. Peter St, Suite 600, St. Paul, MN 55102, Phone: 651-222-3701
STRUCTURAL: ERA Structural Engineering, Ericksen Roed & Associates, 2550 University Ave W, Suite 423-S, St. Paul, MN 55114, Phone: 651-251-7570
MEP: Dunham, Dunham Associates, Inc., 50 South Sixth St, Suite 1100, Minneapolis, MN 55402, Phone: 612-465-7550
CIVIL: EVS, 10025 Valley View Rd, Suite 140, Eden Prairie, MN 55344, Phone: 952-646-0236
LANDSCAPE: Confluence, CONFLUENCE, 524 N Main Ave, Suite 201, Sioux Falls, SD 57104, Phone: 605-339-1205

ARCHITECT OF RECORD
A/E:
Stone Group Architects
600 E 7th Street
Sioux Falls, SD 57103
605-271-1144
STONE GROUP ARCHITECTS

STAMP: REGISTERED PROFESSIONAL ENGINEER, REG. NO. 4750, MICHAEL A. DEGITTON, SOUTH DAKOTA, 06/22/2022

Office of Construction and Facilities Management
VA U.S. Department of Veterans Affairs

Drawing Title: TYPICAL DETAILS - STEEL JOIST
Phase: CONSTRUCTION DOCUMENTS
Project Title: NEW FRONT LOBBY AND PRIMARY CARE ADDITION
Project Number: VA #438-480, ERA #2020-361
Building Number: 5
Approved:
FOR OFFICIAL USE ONLY
Location: SIOUX FALLS, SOUTH DAKOTA
Issue Date: 06/22/2022
Checked: SJC
Drawn: IDB
Drawing Number: SF004

VA FORM 08 - 6231

C:_Revit_Local_ShortTermLocal\20-361_S20_SF_VA Lobby_JevingtonERA.rvt
6/21/2022 4:13:30 PM

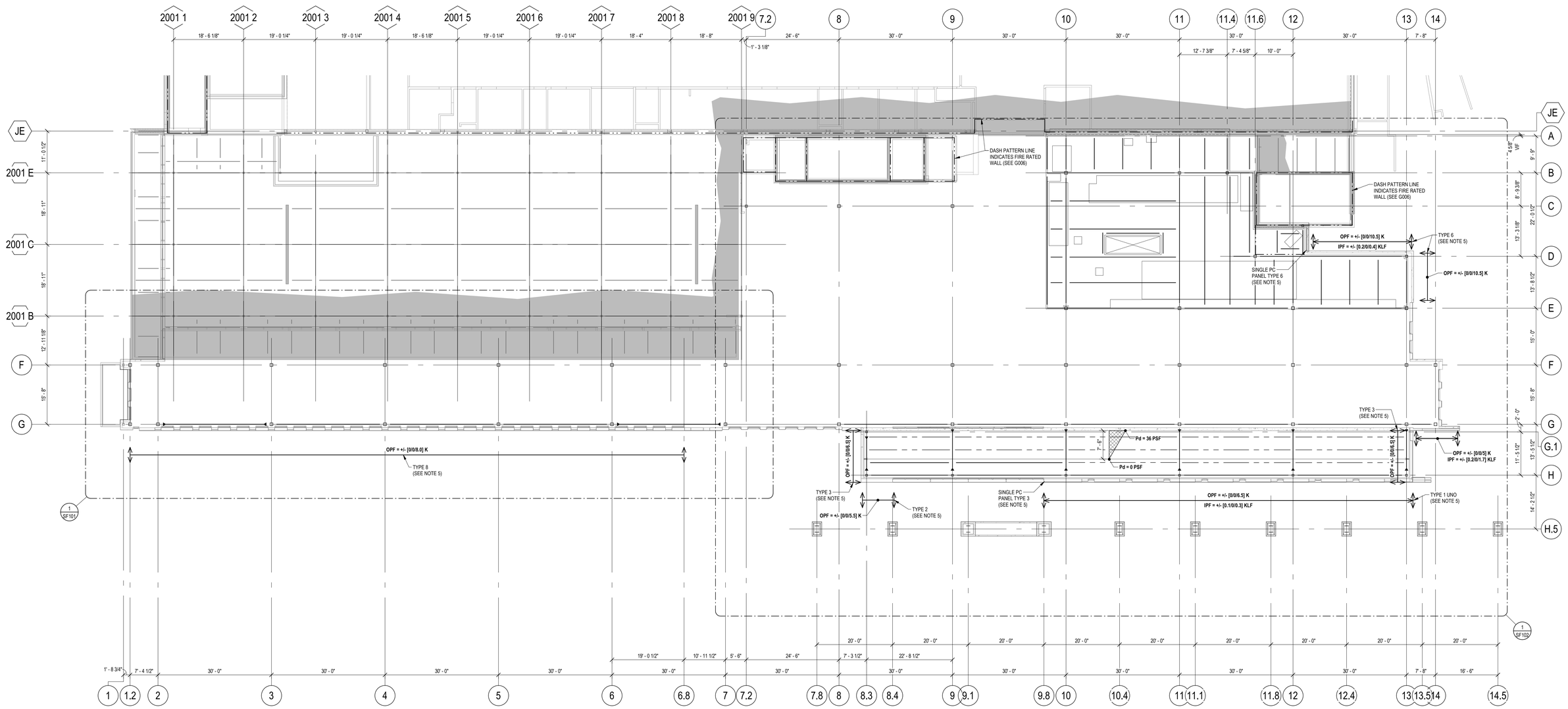


1 SF100 OVERALL FRAMING PLAN
3/32" = 1'-0"

**FOR FRAMING PLAN SHEET NOTES SEE SHEET SF101**

## LOADING PLAN SHEET NOTES

A. General

1. Blast loads have been given by an independent engineer that specializes in blast loading. In plane lateral blast loads have been reduced in accordance with dynamic analysis guidelines provided by the blast engineer. Notify EOR of any changes to blast loading criteria that will impact structural design.
2. Out of plane loads shown on plan are blast loads used to design each connection to lateral resisting system. Precast supplier shall design for loads given by blast engineer as well as other applicable lateral loads per ASCE 7. Notify EOR if precast blast design loads are to exceed out of plane forces shown on plan.
3. All other loads have been calculated in accordance with current adopted ASCE 7 without modifications. Wind and earthquake loading is reported as ultimate. All other loading is reported as a service load. Use load combinations per applicable Code.
4. Out of plane force (OPF) noted on plan in kips (K) shall act at two points at each precast panel.
5. Precast wall reinforcement pertaining to out of plane forces has been assumed to be the following. See plan and notify EOR of discrepancies:

| Type | Reinforcement |
|---|---|
| 1 | 5 - #4 (MAX) |
| 2 | 6 - #4 (MAX) |
| 3 | 7 - #4 (MAX) |
| 4 | #5 @ 18" OC |
| 5 | 3 - #5 EA FACE |
| 6 | 0.36% MAX REINFORCING |
| 7 | 0.5% MAX REINFORCING |
| 8 | 0.4% MAX REINFORCING |

## TYPICAL ABBREVIATIONS

| | | |
|---|---|---|
| ADF | = | APPLIED DIAPHRAGM FORCE |
| B | = | BLAST LOAD |
| CF | = | CHORD FORCE |
| D | = | DEAD LOAD |
| E | = | EARTHQUAKE LOAD |
| IPF | = | IN PLANE FORCE |
| K | = | KIPS (1,000 POUNDS) |
| KLF | = | KIPS PER LINEAR FOOT |
| H | = | LATERAL EARTH PRESSURE |
| HDF | = | HOLD DOWN FORCE |
| L | = | LIVE LOAD |
| Pd | = | MAXIMUM SNOW DRIFT INTENSITY |
| OPF | = | OUT OF PLANE FORCE |
| PSF | = | POUNDS PER SQUARE FOOT |
| Lr | = | ROOF LIVE LOAD |
| S | = | SNOW LOAD |
| Dsi | = | SUPERIMPOSED DEAD LOAD |
| UR | = | UNREDUCIBLE |
| T | = | WEIGHT FROM TOPPING - THICKNESS MAY VARY (SEE PLAN) |
| W | = | WIND LOAD |

## TYPICAL SYMBOLS

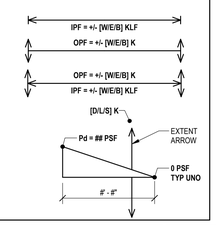


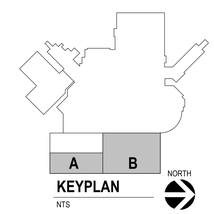


KEYPLAN
NTS

| Revision # | Description | Date: |
|---|---|---|
| | | |

## CONSULTANTS


ARCHITECTURAL: BWBR
380 St. Peter St
Suite 600
St. Paul, MN 55102
Phone: 651-222-3701

STRUCTURAL: ERA STRUCTURAL ENGINEERING
Ericksen Roed & Associates
2550 University Ave W
Suite 423-S
St. Paul, MN 55114
Phone: 651-251-7570

MEP: DUNHAM
Dunham Associates, Inc.
50 South Sath St
Suite 1100
Minneapolis, MN 55402
Phone: 612-465-7550

CIVIL: EVS
EVS
10025 Valley View Rd
Suite 140
Eden Prairie, MN 55344
Phone: 952-646-0236

LANDSCAPE: CONFLUENCE
CONFLUENCE
524 N Main Ave
Suite 201
Sioux Falls, SD 57104
Phone: 605-339-1205


## ARCHITECT OF RECORD


**A/E:**
**Stone Group Architects**
**600 E 7th Street**
**Sioux Falls, SD 57103**
**605-271-1144**

STONE GROUP ARCHITECTS


STAMP

REGISTERED PROFESSIONAL ENGINEER
REG. NO. 4750
MICHAEL A. DUITSMAN
SOUTH DAKOTA
06/22/2022

Office of Construction and Facilities Management

VA U.S. Department of Veterans Affairs

| Drawing Title | Phase | Project Title | Project Number |
|---|---|---|---|
| OVERALL FIRST FLOOR AND LOW ROOF FRAMING PLAN | CONSTRUCTION DOCUMENTS | NEW FRONT LOBBY AND PRIMARY CARE ADDITION | VA #438-480 ERA #2020-361 |
| Approved: | FOR OFFICIAL USE ONLY | Location: SIOUX FALLS, SOUTH DAKOTA | Building Number: 5 |
| | | Issue Date: 06/22/2022 / Checked: SJC / Drawn: IDB | Drawing Number: SF100 |

C:_Revit_Local_Central_ShortTermLocal\20-361_S20_SF_VA Lobby_dewright@ERA.rvt

6/21/2022 4:13:39 PM

VA FORM 08 - 6231

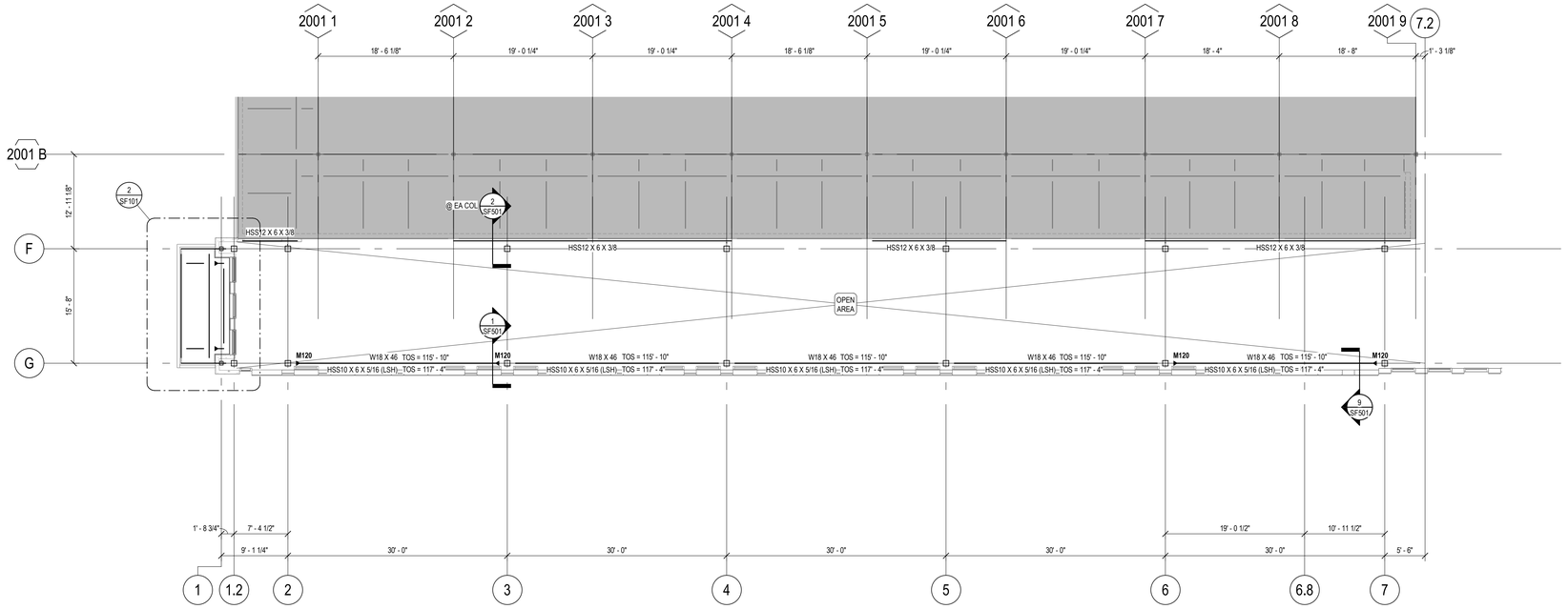


1 SF101 FRAMING PLAN - AREA A
1/8" = 1'-0"

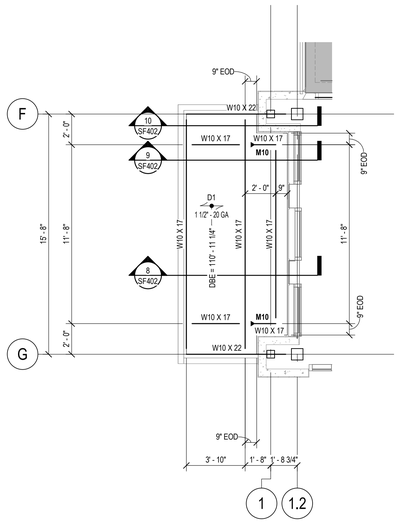


2 SF101 ENLARGED FRAMING PLAN - CANOPY
1/4" = 1'-0"

## FRAMING PLAN SHEET NOTES

A. General

1. See Cover Sheet for structural sheet index defining sheet name, sheet number and issue status.
2. See Cover Sheet for Structural Abbreviations, Typical Marks & Symbols and Plan Legends.
3. Review General Structural Notes and typical details in conjunction with applicable plans. See sheet index on Cover Sheet.
4. If present, coordinate the sizes and locations of tunnels, electrical cells, pits, pipes, floor drains, trenches and floor recesses with Architectural, Structural, Mechanical, Civil, and Electrical drawings.
5. Elevation 100'-0" on these drawings match elevation 1500.05' on Civil drawings at time of issue. Verify with latest Civil drawings and notify SEOR if different.
6. Dimensions shown with +/- indicate dimensions that have been rounded to the nearest 1/16 of an inch.
7. Contractor shall coordinate all embedded items required for precast connections. Embedded items to be provided by precast supplier and installed by concrete contractor.

B. Steel Columns

1. "SC#" denotes steel column. See column schedule for size, base plate and anchor bolt information.
2. All steel columns shall be centered on grid intersections unless dimensioned otherwise on plan.
3. Steel columns, base plates, and anchor bolts below grade exposed to soil shall be coated with two heavy coats of bitumastic paint.

C. Steel Beams

1. Top of steel is noted on plan as:
   a) Top of steel beam elevation (TOS =)
   b) Joist bearing elevation (JBE =)
   c) Deck bearing elevation (DBE =)
   Slope structure uniformly between varying elevations.
2. Required beam end connection capacity, in kips (factored) is as shown on plan. If no reaction is given on plan, refer to typical beam reaction schedule. Also see General Structural Notes, typical details, and any applicable sections / details.
3. See typical details for steel beam to concrete wall connections and embed requirements.
4. See Steel Framing Legend for headed shear stud designation. (NC) indicates non-composite beam with no shear studs required. Beams without the ( ) designation shall receive one row of shear studs at 24" OC.

D. Steel Joists / Joist Girders

1. Top of steel is noted on plan as:
   a) Top of steel beam elevation (TOS =)
   b) Joist bearing elevation (JBE =)
   c) Deck bearing elevation (DBE =)
   Slope structure uniformly between varying elevations.
2. Joist seat depth shall be as indicated below, unless noted otherwise:
   K-Series Joists = 2 1/2"
   LH-Series Joists = 5"
3. Align joist panel points within bays for installation of duct work, pipes, etc.
4. Representative joist bridging shown on plan. Joist bridging shall have size, type and spacing per SJI. Final sizes, quantities, and locations shall steel joist shop drawings.
5. Provide "X" bridging at adjacent joist spaces where typical horizontal bridging is removed for ductwork penetrations. Coordinate details with joist manufacturer.
6. Joist manufacturer shall design joists for uniform loads indicated on plans.
7. Joist manufacturer shall design joists for any additional vertical loads identified on plans, details, or notes, including but not limited to, roof top equipment, snow drifting, rain water leaders, curtains, basketball hoops, pipes, etc. Coordinate size, location and service weights with Electrical, Mechanical, Plumbing and Contractor.
8. Rooftop equipment loads shown on drawings include curb weights. Weights shall be increased by 25% to account for unbalanced loads. Loads shall be assumed to be distributed equally to supports.

D. Steel Joists / Joist Girders cont.

9. Mechanical equipment shall be placed to bear on two joists minimum.
10. In addition to the loads indicated on the drawings, design all joists for:
    a) 250 lb concentrated load acting at any top or bottom chord panel point.
    b) 100 lb concentrated load acting anywhere along the bottom chord.
11. See typical details for joist seat minimum rollover forces and locations resulting from wind or seismic loading.
12. Design joists and joist girders to resist an ultimate net uplift as shown:
    Typical:
    22.0 psf for tributary areas less than 100 SF
    22.0 psf for tributary areas more than 100 SF
    Within 10'-0" of exterior perimeter:
    40.0 psf for tributary areas less than 100 SF
    25.0 psf for tributary areas more than 100 SF
13. See typical details for bracing from the bottom flange of a beam to joist top chord.
14. See typical details for required joist reinforcement where concentrated loads greater than 100 lbs are not applied at panel points.
15. See typical details for typical hanging pipe support. For conditions not covered by typical details, refer to the structural engineer for direction.

E. Structural Slab on Metal Deck

1. "CS#" denotes structural slab on metal deck mark. See deck schedule for deck thickness and gage, headed stud diameter and net-in-place length and concrete reinforcement.
2. Top of slab elevation (TOSL =) is shown on plan.
3. See typical details for suggested construction joint locations and additional reinforcement. Do not place construction joints on composite beam flange.
4. Concrete Contractor shall submit locations of slab construction joints for review three weeks minimum prior to pour.
5. Slabs shall be screeded from cambered beams to maintain slab thickness.
6. Contractor shall verify all equipment weights, sizes, locations and openings required. Openings shown are the only locations known to Structural at time of issue. Contractor shall coordinate any changes with Structural Engineer of Record.
7. See typical details for reinforcement and framing requirements at slab openings.
8. Deck shall be fastened to supporting members per SDI specifications unless noted otherwise.
9. See specifications for required deck finishes.
10. Submit shop drawings indicating stud layout (number of studs per rib) and placement along beams. Deck configuration may affect the number of shear studs required, see specifications.
11. Provide clear space between core drilled openings equal to 2 x the larger core diameter. Where this spacing is not possible, reinforce the slab per typical slab opening detail. The maximum allowable core diameter is 12".

F. Metal Roof Deck

1. "D#" denotes metal roof deck mark. See schedule for deck thickness, gage, and fastening information to supporting members.
2. Place deck perpendicular to supporting members using a 3 span condition minimum unless noted otherwise.
3. See specifications for required deck finishes.
4. Contractor shall verify all openings required. Openings shown are the only locations known to Structural at time of issue. Contractor shall coordinate any changes with the Structural Engineer of Record.
5. See typical details for additional framing at roof openings.
6. Deck attachment of the (N) nested 3" (20 GA) deck to the (E) deck between grids 2001-8 & 2001-9 shall be #10 tek screws @ 24" oc each way.

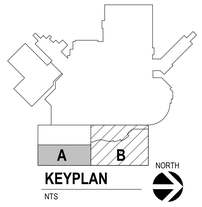


KEYPLAN
NTS

| Revision # | Description | Date: |
|---|---|---|
| | | |

CONSULTANTS

ARCHITECTURAL: BWBR, 380 St. Peter St, Suite 600, St. Paul, MN 55102, Phone: 651-222-3701
STRUCTURAL: ERA Structural Engineering, Ericksen Roed & Associates, 2550 University Ave W, Suite 423-S, St. Paul, MN 55114, Phone: 651-251-7570
MEP: Dunham, Dunham Associates, Inc., 50 South Sixth St, Suite 1100, Minneapolis, MN 55402, Phone: 612-465-7550
CIVIL: EVS, 10025 Valley View Rd, Suite 140, Eden Prairie, MN 55344, Phone: 952-646-0236
LANDSCAPE: CONFLUENCE, 524 N Main Ave, Suite 201, Sioux Falls, SD 57104, Phone: 605-339-1205

ARCHITECT OF RECORD
A/E:
Stone Group Architects
600 E 7th Street
Sioux Falls, SD 57103
605-271-1144
STONE GROUP ARCHITECTS

STAMP
REGISTERED PROFESSIONAL ENGINEER, REG. NO. 4750, MICHAEL A. DEGITTON, DAKOTA, 06/22/2022

Office of Construction and Facilities Management
VA U.S. Department of Veterans Affairs

Drawing Title: LOW FRAMING PLAN - AREA A
Approved:
Phase: CONSTRUCTION DOCUMENTS
FOR OFFICIAL USE ONLY
Project Title: NEW FRONT LOBBY AND PRIMARY CARE ADDITION
Location: SIOUX FALLS, SOUTH DAKOTA
Issue Date: 06/22/2022
Checked: SJC
Drawn: IDB
Project Number: VA #438-480, ERA #2020-361
Building Number: 5
Drawing Number: SF101

VA FORM 08 - 6231

C:_Revit_Local_ShortTermLocal\20-361_S20_SF_VA Lobby_BevingtonERA.rvt
6/21/2022 4:13:48 PM

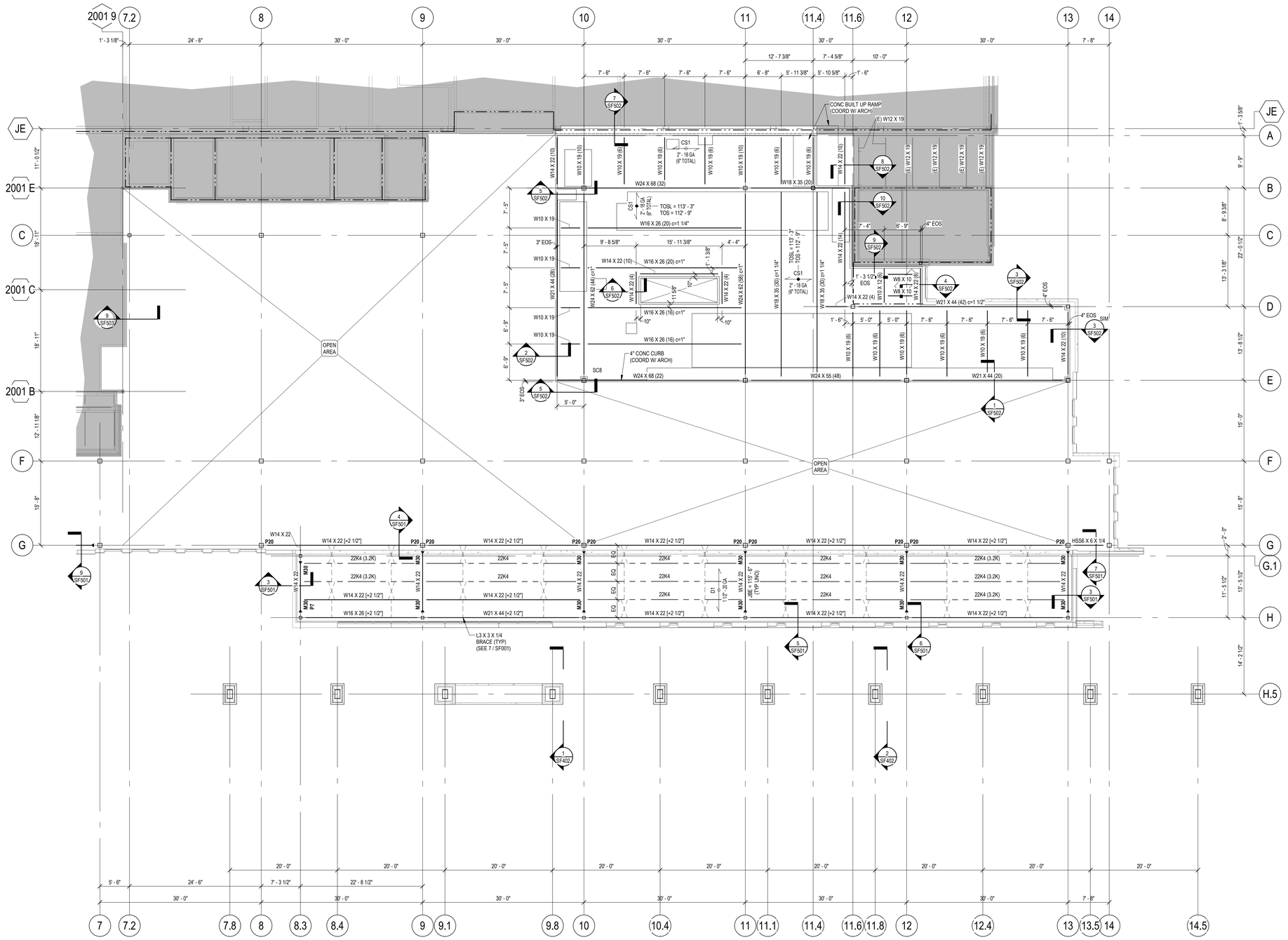


1 SF102 FRAMING PLAN - AREA B
1/8" = 1'-0"

**FOR FRAMING PLAN SHEET NOTES SEE SHEET SF101**

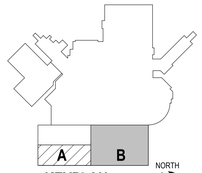


KEYPLAN
NTS

| Revision # | Description | Date: |
|---|---|---|
| | | |

## CONSULTANTS

**ARCHITECTURAL:** BWBR
380 St. Peter St
Suite 600
St. Paul, MN 55102
Phone: 651-222-3701

**STRUCTURAL:** ERA STRUCTURAL ENGINEERING
Ericksen Roed & Associates
2550 University Ave W
Suite 423-S
St. Paul, MN 55114
Phone: 651-251-7570

**MEP:** DUNHAM
Dunham Associates, Inc.
50 South Sixth St
Suite 1100
Minneapolis, MN 55402
Phone: 612-465-7550

**CIVIL:** EVS
EVS
10025 Valley View Rd
Suite 140
Eden Prairie, MN 55344
Phone: 952-646-0236

**LANDSCAPE:** CONFLUENCE
CONFLUENCE
524 N Main Ave
Suite 201
Sioux Falls, SD 57104
Phone: 605-339-1205

## ARCHITECT OF RECORD

**A/E:**
**Stone Group Architects**
**600 E 7th Street**
**Sioux Falls, SD 57103**
**605-271-1144**

STONE GROUP ARCHITECTS

**STAMP**
REGISTERED PROFESSIONAL ENGINEER
REG. NO. 4750
MICHAEL A. DESOTTO
SOUTH DAKOTA
06/22/2022

Office of Construction and Facilities Management

VA U.S. Department of Veterans Affairs

**Drawing Title**
FIRST FLOOR AND LOW ROOF FRAMING PLAN - AREA B

**Approved:**

**Phase**
CONSTRUCTION DOCUMENTS

FOR OFFICIAL USE ONLY

**Project Title**
NEW FRONT LOBBY AND PRIMARY CARE ADDITION

**Location**
SIOUX FALLS, SOUTH DAKOTA

**Issue Date** 06/22/2022
**Checked** SJC
**Drawn** IDB

**Project Number** VA #438-480 ERA #2020-361
**Building Number** 5
**Drawing Number** SF102

VA FORM 08 - 6231

C:_Revit_Local_ShortTerm\Local\20-361_S20_SF_VA Lobby_BenningtonERA.rvt
6/21/2022 4:13:57 PM

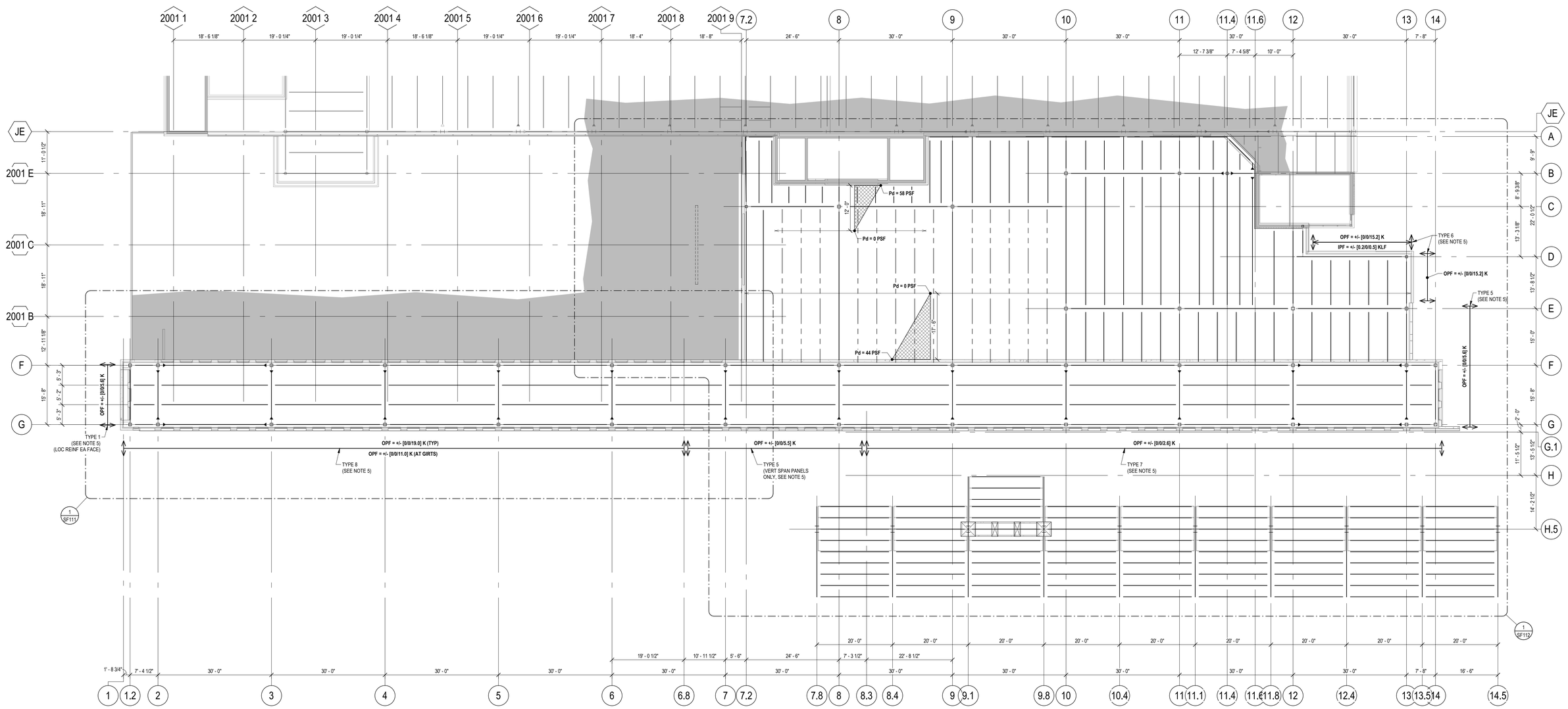


1 SF110 OVERALL FRAMING PLAN
3/32" = 1'-0"

**FOR FRAMING PLAN SHEET NOTES SEE SHEET SF101**

## LOADING PLAN SHEET NOTES

A. General

1. Blast loads have been given by an independent engineer that specializes in blast loading. In plane lateral blast loads have been reduced in accordance with dynamic analysis guidelines provided by the blast engineer. Notify EOR of any changes to blast loading criteria that will impact structural design.
2. Out of plane loads shown on plan are blast loads used to design each connection to lateral resisting system. Precast supplier shall design for loads given by blast engineer as well as other applicable lateral loads per ASCE 7. Notify EOR if precast blast design loads are to exceed out of plane forces shown on plan.
3. All other loads have been calculated in accordance with current adopted ASCE 7 without modifications. Wind and earthquake loading is reported as ultimate. All other loading is reported as a service load. Use load combinations per applicable Code.
4. Out of plane force (OPF) noted on plan in kips (K) shall act at two points at each precast panel.
5. Precast wall reinforcement pertaining to out of plane forces has been assumed to be the following. See plan and notify EOR of discrepancies:

| Type | Reinforcement |
|---|---|
| 1 | 5 - #4 (MAX) |
| 2 | 6 - #4 (MAX) |
| 3 | 7 - #4 (MAX) |
| 4 | #5 @ 18" OC |
| 5 | 3 - #5 EA FACE |
| 6 | 0.36% MAX REINFORCING |
| 7 | 0.5% MAX REINFORCING |
| 8 | 0.4% MAX REINFORCING |

## TYPICAL ABBREVIATIONS

| | | |
|---|---|---|
| ADF | = | APPLIED DIAPHRAGM FORCE |
| B | = | BLAST LOAD |
| CF | = | CHORD FORCE |
| D | = | DEAD LOAD |
| E | = | EARTHQUAKE LOAD |
| IPF | = | IN PLANE FORCE |
| K | = | KIPS (1,000 POUNDS) |
| KLF | = | KIPS PER LINEAR FOOT |
| H | = | LATERAL EARTH PRESSURE |
| HDF | = | HOLD DOWN FORCE |
| L | = | LIVE LOAD |
| Pd | = | MAXIMUM SNOW DRIFT INTENSITY |
| OPF | = | OUT OF PLANE FORCE |
| PSF | = | POUNDS PER SQUARE FOOT |
| Lr | = | ROOF LIVE LOAD |
| S | = | SNOW LOAD |
| Dsi | = | SUPERIMPOSED DEAD LOAD |
| UR | = | UNREDUCIBLE |
| T | = | WEIGHT FROM TOPPING - THICKNESS MAY VARY (SEE PLAN) |
| W | = | WIND LOAD |

## TYPICAL SYMBOLS

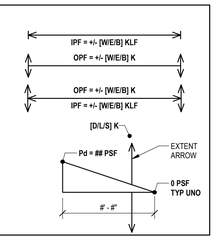


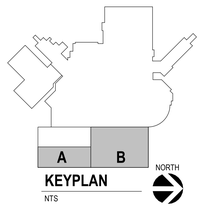


KEYPLAN
NTS

| Revision # | Description | Date: |
|---|---|---|
| | | |

## CONSULTANTS


ARCHITECTURAL: BWBR
380 St. Peter St
Suite 600
St. Paul, MN 55102
Phone: 651-222-3701

STRUCTURAL: ERA Structural Engineering
Ericksen Roed & Associates
2550 University Ave W
Suite 423-S
St. Paul, MN 55114
Phone: 651-251-7570

MEP: Dunham
Dunham Associates, Inc.
50 South Sixth St
Suite 1100
Minneapolis, MN 55402
Phone: 612-465-7550

CIVIL: EVS
EVS
10025 Valley View Rd
Suite 140
Eden Prairie, MN 55344
Phone: 952-646-0236

LANDSCAPE: Confluence
CONFLUENCE
524 N Main Ave
Suite 201
Sioux Falls, SD 57104
Phone: 605-339-1205

ARCHITECT OF RECORD
A/E:
Stone Group Architects
600 E 7th Street
Sioux Falls, SD 57103
605-271-1144
STONE GROUP ARCHITECTS


STAMP
REGISTERED PROFESSIONAL ENGINEER
REG. NO. 4750
MICHAEL A. DEGITTON
SOUTH DAKOTA
06/22/2022

Office of Construction and Facilities Management
VA U.S. Department of Veterans Affairs

| | | | |
|---|---|---|---|
| Drawing Title: OVERALL HIGH ROOF FRAMING PLAN | Phase: CONSTRUCTION DOCUMENTS | Project Title: NEW FRONT LOBBY AND PRIMARY CARE ADDITION | Project Number: VA #438-480, ERA #2020-361 |
| | | | Building Number: 5 |
| Approved: | FOR OFFICIAL USE ONLY | Location: SIOUX FALLS, SOUTH DAKOTA | Drawing Number: SF110 |
| | | Issue Date: 06/22/2022 · Checked: SJC · Drawn: IDB | |

VA FORM 08 - 6231

C:_Revit_Local_ShortTermLocal\20-361_S20_SF_VA Lobby_bevingtonERA.rvt
6/21/2022 4:14:06 PM

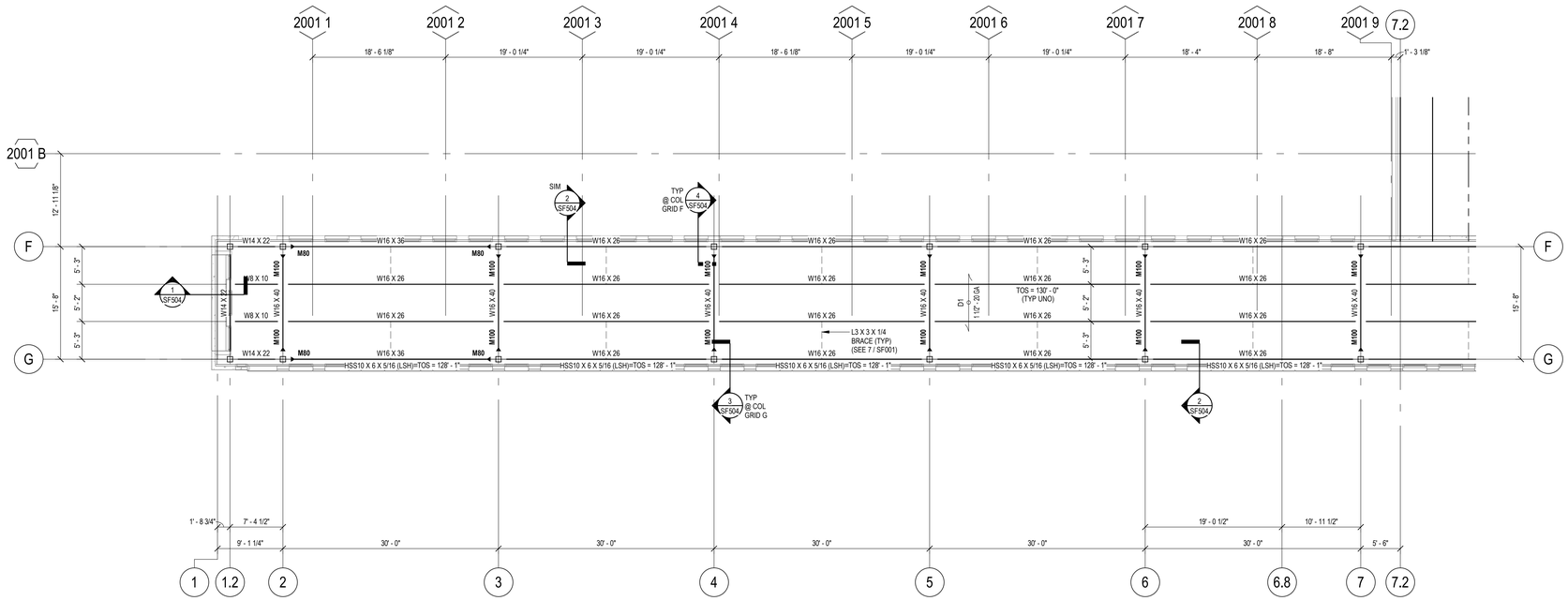


1 SF111 FRAMING PLAN - AREA A
1/8" = 1'-0"

**FOR FRAMING PLAN SHEET NOTES SEE SHEET SF101**

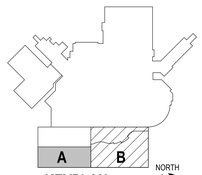


KEYPLAN
NTS

| Revision # | Description | Date: |
|---|---|---|
| | | |

## CONSULTANTS


**ARCHITECTURAL:** BWBR
380 St. Peter St
Suite 600
St. Paul, MN 55102
Phone: 651-222-3701

**STRUCTURAL:** ERA STRUCTURAL ENGINEERING
**Ericksen Roed & Associates**
2550 University Ave W
Suite 423-S
St. Paul, MN 55114
Phone: 651-251-7570

**MEP:** DUNHAM
**Dunham Associates, Inc.**
50 South Sath St
Suite 1100
Minneapolis, MN 55402
Phone: 612-465-7550

**CIVIL:** EVS
**EVS**
10025 Valley View Rd
Suite 140
Eden Prairie, MN 55344
Phone: 952-646-0236

**LANDSCAPE:** CONFLUENCE
**CONFLUENCE**
524 N Main Ave
Suite 201
Sioux Falls, SD 57104
Phone: 605-339-1205

## ARCHITECT OF RECORD

**A/E:**
**Stone Group Architects**
**600 E 7th Street**
**Sioux Falls, SD 57103**
**605-271-1144**

STONE GROUP ARCHITECTS


**STAMP**

REGISTERED PROFESSIONAL ENGINEER
REG. NO. 4750
MICHAEL A. DUITSMAN
SOUTH DAKOTA
06/22/2022

Office of Construction and Facilities Management

VA U.S. Department of Veterans Affairs

| | | | |
|---|---|---|---|
| **Drawing Title** ROOF FRAMING PLAN - AREA A | **Phase** CONSTRUCTION DOCUMENTS | **Project Title** NEW FRONT LOBBY AND PRIMARY CARE ADDITION | **Project Number** VA #438-480 ERA #2020-361 |
| | | | **Building Number** 5 |
| **Approved:** | FOR OFFICIAL USE ONLY | **Location** SIOUX FALLS, SOUTH DAKOTA | **Drawing Number** SF111 |
| | | **Issue Date** 06/22/2022 · **Checked** SJC · **Drawn** IDB | |

C:_Revit_Local_Central\20-361_SD0_SF_VA Lobby_dewinghoeERA.rvt

8/21/2022 4:14:15 PM

VA FORM 08 - 6231

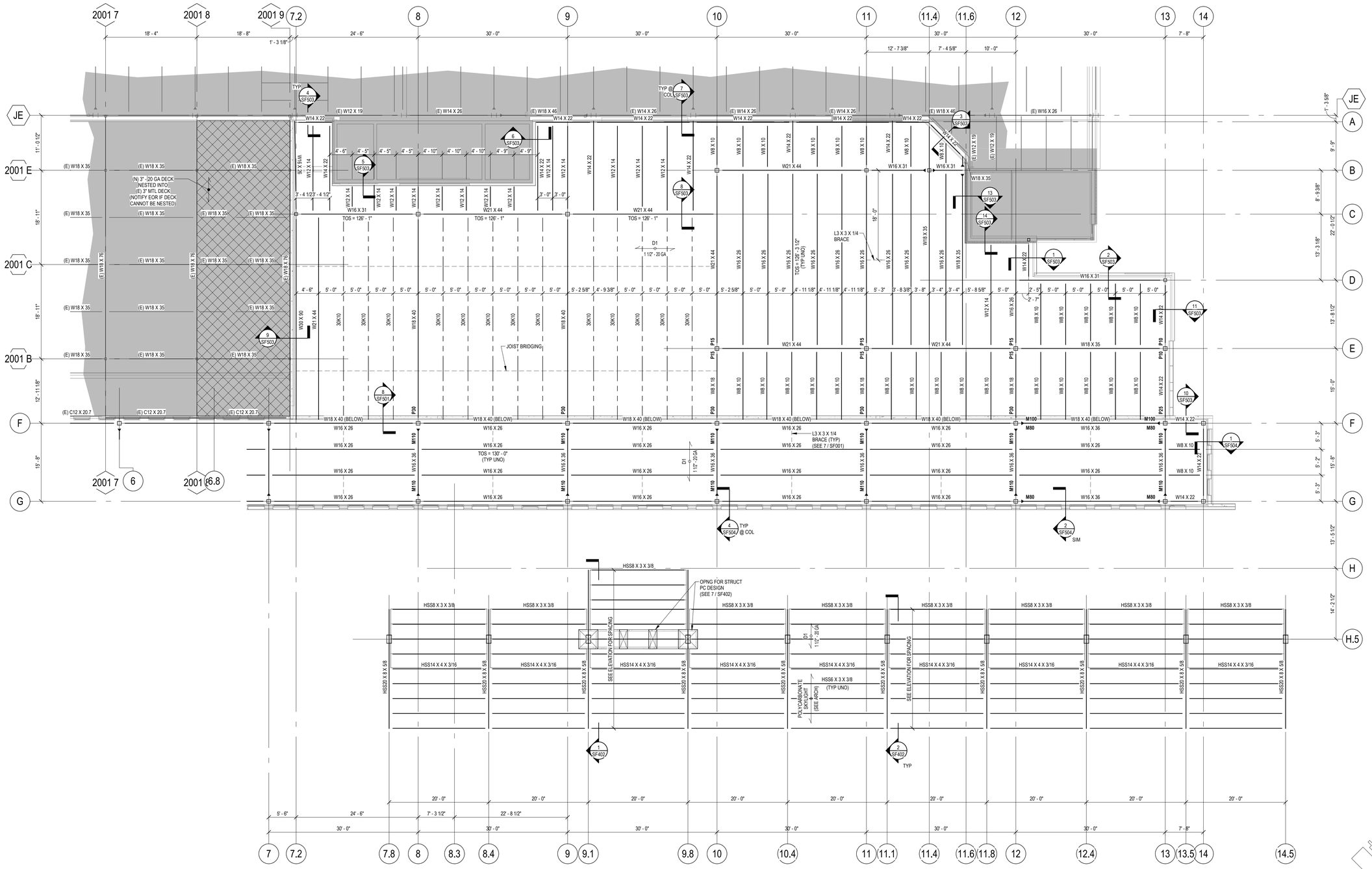


1 SF112 FRAMING PLAN - AREA B
1/8" = 1'-0"

**FOR FRAMING PLAN SHEET NOTES SEE SHEET SF101**

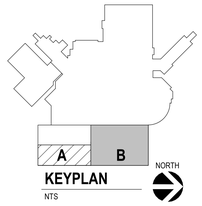


KEYPLAN
NTS

| Revision # | Description | Date: |
|---|---|---|
| | | |

## CONSULTANTS

**ARCHITECTURAL:** BWBR
380 St. Peter St
Suite 600
St. Paul, MN 55102
Phone: 651-222-3701

**STRUCTURAL:** ERA STRUCTURAL ENGINEERING
**Eriksen Roed & Associates**
2550 University Ave W
Suite 423-S
St. Paul, MN 55114
Phone: 651-251-7570

**MEP:** DUNHAM
**Dunham Associates, Inc.**
50 South Sixth St
Suite 1100
Minneapolis, MN 55402
Phone: 612-465-7550

**CIVIL:** EVS
**EVS**
10025 Valley View Rd
Suite 140
Eden Prairie, MN 55344
Phone: 952-646-0236

**LANDSCAPE:** CONFLUENCE
**CONFLUENCE**
524 N Main Ave
Suite 201
Sioux Falls, SD 57104
Phone: 605-339-1205

## ARCHITECT OF RECORD

**A/E:**
**Stone Group Architects**
**600 E 7th Street**
**Sioux Falls, SD 57103**
**605-271-1144**

STONE GROUP ARCHITECTS

**STAMP**
REGISTERED PROFESSIONAL ENGINEER
REG. NO. 4750
MICHAEL A. DOSITHEE
SOUTH DAKOTA
06/22/2022

Office of Construction and Facilities Management

VA U.S. Department of Veterans Affairs

| Drawing Title | Phase | Project Title | Project Number |
|---|---|---|---|
| ROOF FRAMING PLAN - AREA B | CONSTRUCTION DOCUMENTS | NEW FRONT LOBBY AND PRIMARY CARE ADDITION | VA #438-480 ERA #2020-361 |
| | | | Building Number: 5 |
| Approved: | FOR OFFICIAL USE ONLY | Location: SIOUX FALLS, SOUTH DAKOTA | Drawing Number: SF112 |
| | | Issue Date: 06/22/2022 · Checked: SJC · Drawn: IDB | |

VA FORM 08 - 6231

C:_Revit\Local_ShortTermLocal\20-361_S20_SF_VA Lobby_BevingtonERA.rvt

6/21/2022 4:14:25 PM

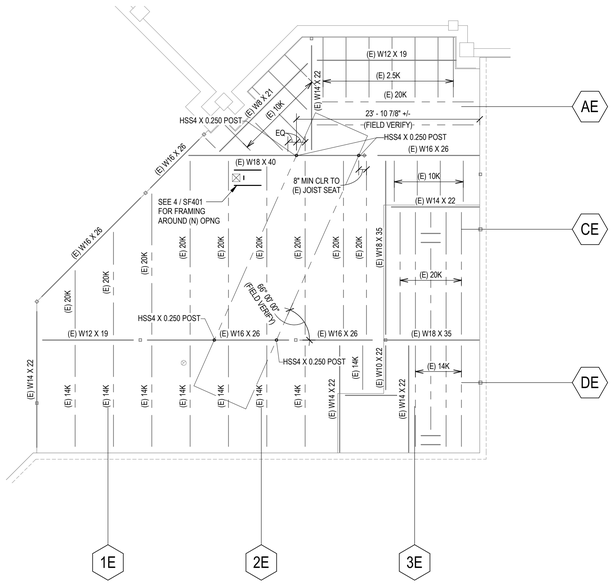


INFORMATION ON THIS PLAN REGARDING EXISTING STRUCTURE WAS TAKEN FROM EXISTING CONSTRUCTION DOCUMENTS. ACTUAL FIELD CONDITION MAY VARY FROM WHAT IS SHOWN. ALL DIMENSIONS, ELEVATIONS AND CONDITIONS OF EXISTING STRUCTURE TO BE FIELD VERIFIED PRIOR TO FABRICATION.

1 SF401 EXISTING ROOF - ENLARGED FRAMING PLAN
1/8" = 1'-0"

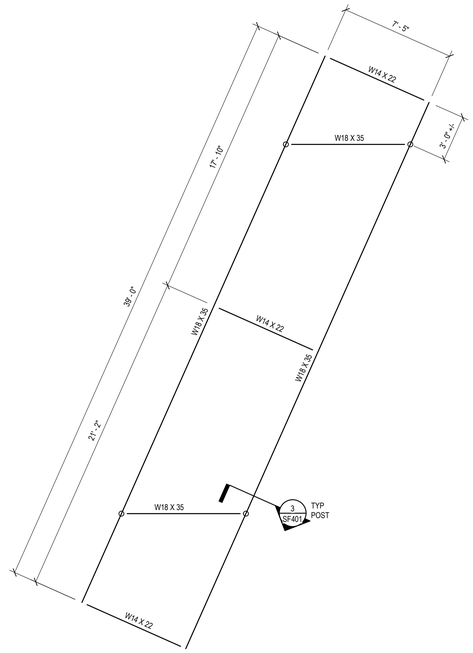


2 SF401 ROOF TOP UNIT - ENLARGED FRAMING PLAN
1/4" = 1'-0"

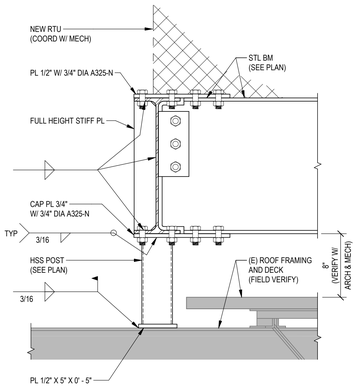


3 SF401 FRAMING DETAIL
1 1/2" = 1'-0"

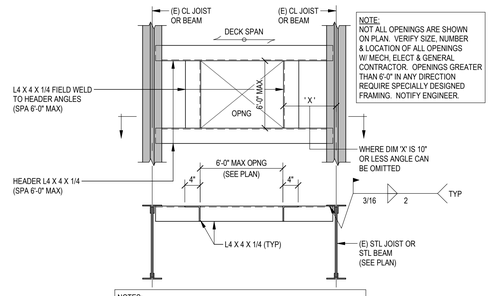


NOTE:
NOT ALL OPENINGS ARE SHOWN ON PLAN. VERIFY SIZE, NUMBER & LOCATION OF ALL OPENINGS W/ MECH, ELECT & GENERAL CONTRACTOR. OPENINGS GREATER THAN 6'-0" IN ANY DIRECTION REQUIRE SPECIALLY DESIGNED FRAMING. NOTIFY ENGINEER.

NOTES:
1. SEE STRUCTURAL PLANS FOR ROOF OPENING LOCATIONS KNOWN AT TIME OF ISSUE.

2. SEE ARCH, MECH, AND ELECT DRAWINGS FOR QUANTITIES, SIZES, AND LOCATIONS OF DECK OPENINGS.

3. METAL DECK OMITTED FOR CLARITY. SEE PLAN / SCHED FOR WELDING PATTERNS. SEE O.S.H.A. FOR SAFETY REQUIREMENTS

4 SF401 ROOF FRAME FOR OPNG IN (E) MTL ROOF DECK
NO SCALE

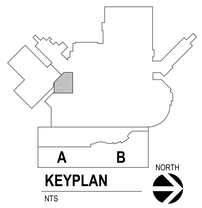


KEYPLAN
NTS

| Revision # | Description | Date: |
|---|---|---|
| | | |

## CONSULTANTS


ARCHITECTURAL: BWBR
380 St. Peter St
Suite 600
St. Paul, MN 55102
Phone: 651-222-3701

STRUCTURAL: ERA STRUCTURAL ENGINEERING
Ericksen Roed & Associates
2500 University Ave W
Suite 423-S
St. Paul, MN 55114
Phone: 651-251-7570

MEP: DUNHAM
Dunham Associates, Inc.
50 South Sixth St
Suite 1100
Minneapolis, MN 55402
Phone: 612-465-7550

CIVIL: EVS
EVS
10025 Valley View Rd
Suite 140
Eden Prairie, MN 55344
Phone: 952-646-0236

LANDSCAPE: CONFLUENCE
CONFLUENCE
524 N Main Ave
Suite 201
Sioux Falls, SD 57104
Phone: 605-339-1205


## ARCHITECT OF RECORD


A/E:
Stone Group Architects
600 E 7th Street
Sioux Falls, SD 57103
605-271-1144
STONE GROUP ARCHITECTS


STAMP
REGISTERED PROFESSIONAL ENGINEER
REG. NO. 4750
MICHAEL A. DOSITCH
SOUTH DAKOTA
06/22/2022

Office of Construction and Facilities Management

VA U.S. Department of Veterans Affairs

| Drawing Title | Phase | Project Title | Project Number |
|---|---|---|---|
| ENLARGED FRAMING PLAN AND DETAILS | CONSTRUCTION DOCUMENTS | NEW FRONT LOBBY AND PRIMARY CARE ADDITION | VA #438-480<br>ERA #2020-361 |
| Approved: | FOR OFFICIAL USE ONLY | Location: SIOUX FALLS, SOUTH DAKOTA | Building Number: 5 |
| | | Issue Date: 06/22/2022 · Checked: SJC · Drawn: IDB | Drawing Number: SF401 |

VA FORM 08 - 6231

C:_Revit_Local_Short Term\Local\20-361_S20_SF_VA Lobby_BevingtonERA.rvt

6/21/2022 4:14:36 PM

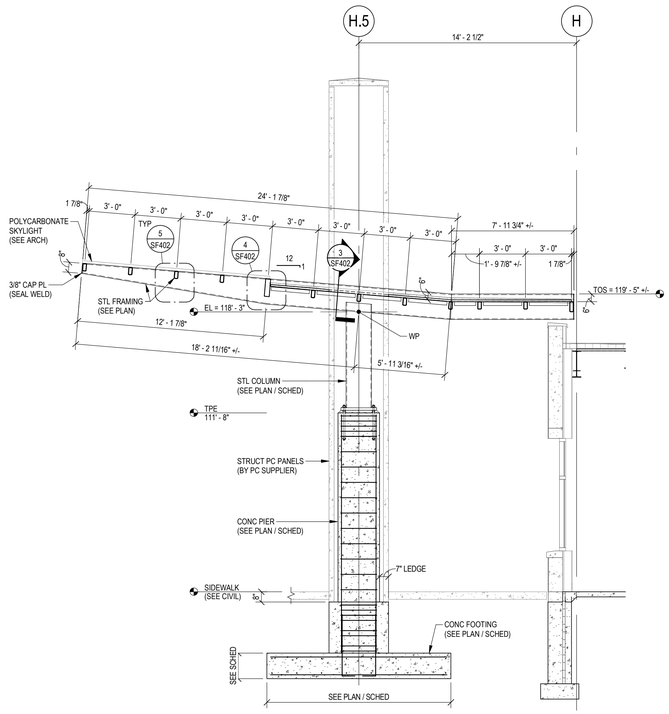


1 SF402 FRAMING ELEVATION
1/4" = 1'-0"

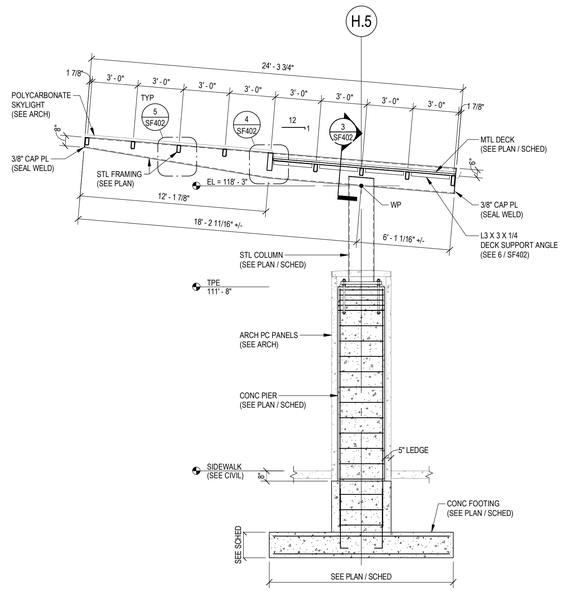


2 SF402 FRAMING ELEVATION
1/4" = 1'-0"

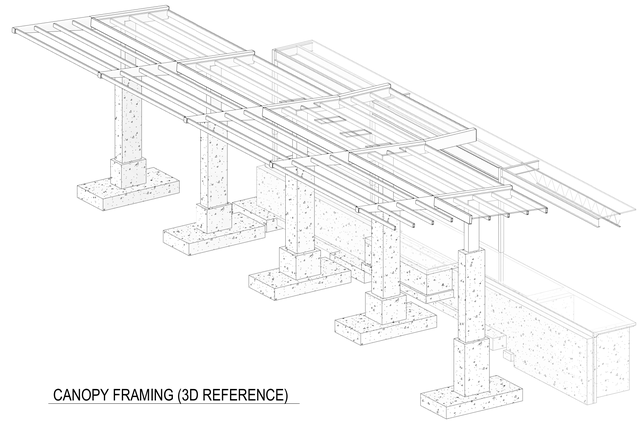

CANOPY FRAMING (3D REFERENCE)

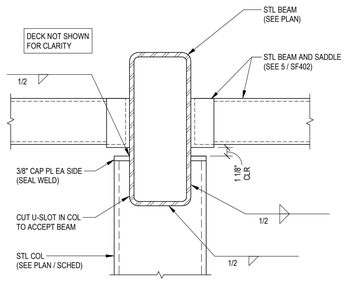


3 SF402 CANOPY FRAMING DETAIL
1 1/2" = 1'-0"

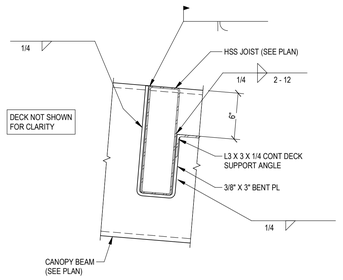


4 SF402 CANOPY FRAMING DETAIL
1 1/2" = 1'-0"

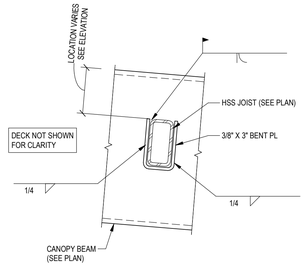


5 SF402 CANOPY FRAMING DETAIL
1 1/2" = 1'-0"

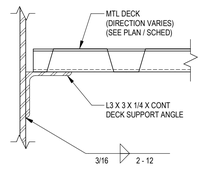


6 SF402 CANOPY FRAMING DETAIL
3" = 1'-0"

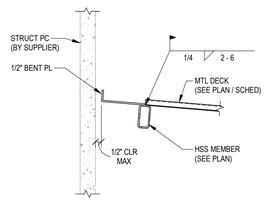


7 SF402 CANOPY DECK EDGE DETAIL
3/4" = 1'-0"

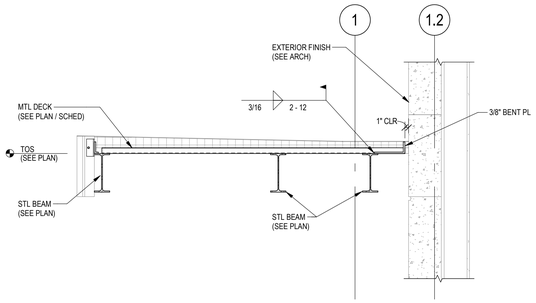


8 SF402 CANOPY FRAMING
3/4" = 1'-0"

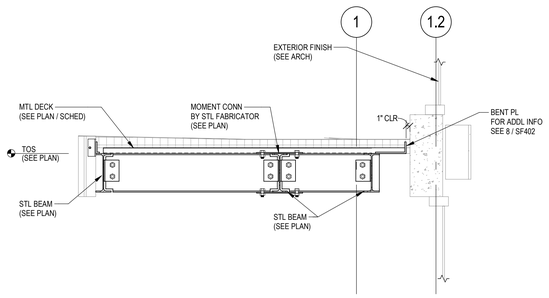


9 SF402 CANOPY FRAMING
3/4" = 1'-0"

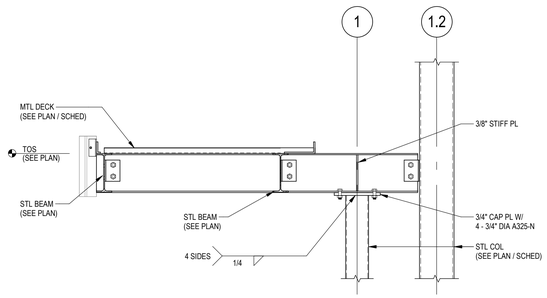


10 SF402 CANOPY FRAMING
3/4" = 1'-0"

| Revision # | Description | Date: |
|---|---|---|
| | | |

## CONSULTANTS

**ARCHITECTURAL:** BWBR
380 St. Peter St
Suite 600
St. Paul, MN 55102
Phone: 651-222-3701

**STRUCTURAL:** ERA STRUCTURAL ENGINEERING
**Ericksen Roed & Associates**
2550 University Ave W
Suite 423-S
St. Paul, MN 55114
Phone: 651-251-7570

**MEP:** DUNHAM
**Dunham Associates, Inc.**
50 South Sixth St
Suite 1100
Minneapolis, MN 55402
Phone: 612-465-7550

**CIVIL:** EVS
**EVS**
10025 Valley View Rd
Suite 140
Eden Prairie, MN 55344
Phone: 952-646-0236

**LANDSCAPE:** CONFLUENCE
**CONFLUENCE**
524 N Main Ave
Suite 201
Sioux Falls, SD 57104
Phone: 605-339-1205

## ARCHITECT OF RECORD

**A/E:**
**Stone Group Architects**
**600 E 7th Street**
**Sioux Falls, SD 57103**
**605-271-1144**

STONE GROUP ARCHITECTS

**STAMP**
REGISTERED PROFESSIONAL ENGINEER
REG. NO. 4750
MICHAEL A. DESJITTON
SOUTH DAKOTA
06/22/2022

Office of Construction and Facilities Management

VA U.S. Department of Veterans Affairs

**Drawing Title**
CANOPY FRAMING DETAILS

**Approved:**

**Phase**
CONSTRUCTION DOCUMENTS

FOR OFFICIAL USE ONLY

**Project Title**
NEW FRONT LOBBY AND PRIMARY CARE ADDITION

**Location**
SIOUX FALLS, SOUTH DAKOTA

**Issue Date** 06/22/2022
**Checked** SJC
**Drawn** IDB

**Project Number**
VA #438-480
ERA #2020-361

**Building Number**
5

**Drawing Number**
SF402

C:_Revit_Local_Short Term\Local\20-361_S20_SF_VA Lobby_Iberington ERA.rvt

6/21/2022 4:14:57 PM

VA FORM 08 - 6231

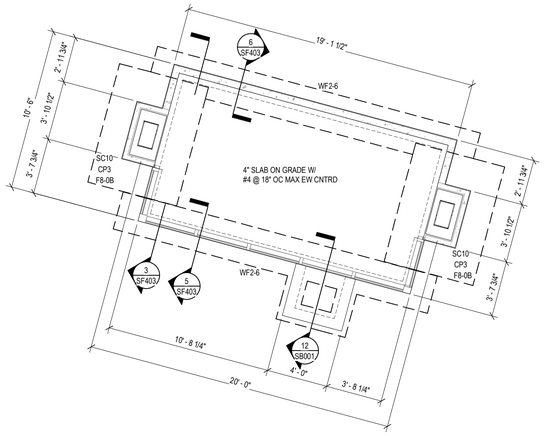


1 SF403 BUS STOP - ENLARGED FOUNDATION PLAN
1/4" = 1'-0"

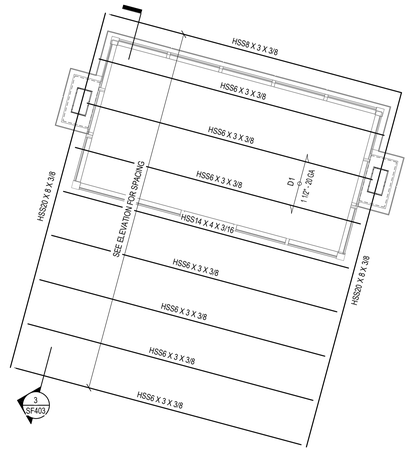


2 SF403 BUS STOP - ENLARGED FRAMING PLAN
1/4" = 1'-0"

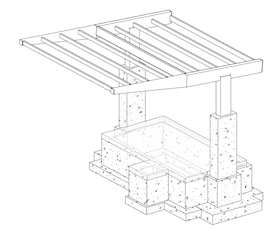

CANOPY FRAMING (3D REFERENCE)

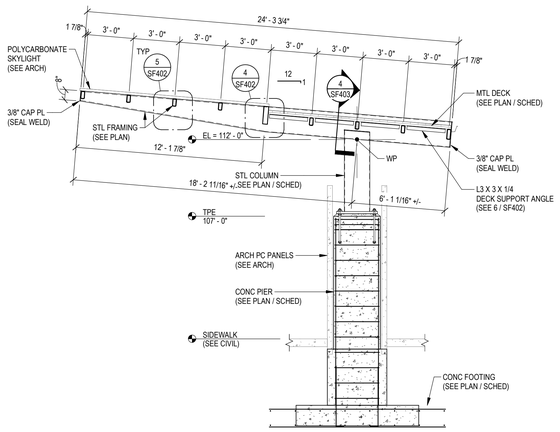


3 SF403 FRAMING ELEVATION
1/4" = 1'-0"

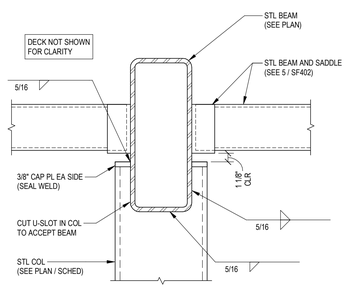


4 SF403 CANOPY FRAMING DETAIL
1 1/2" = 1'-0"

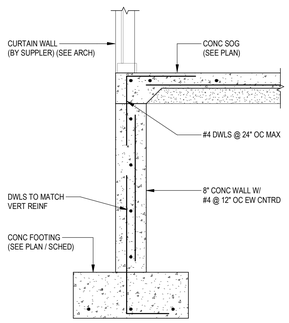


5 SF403 BUS STOP - FOUNDATION DETAIL
3/4" = 1'-0"

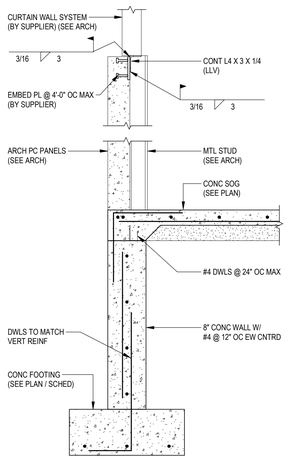


6 SF403 BUS STOP - FOUNDATION DETAIL
3/4" = 1'-0"

| Revision # | Description | Date: |
|---|---|---|
| | | |

## CONSULTANTS


**ARCHITECTURAL:** BWBR
380 St. Peter St
Suite 600
St. Paul, MN 55102
Phone: 651-222-3701

**STRUCTURAL:** ERA STRUCTURAL ENGINEERING
**Ericksen Roed & Associates**
2550 University Ave W
Suite 423-S
St. Paul, MN 55114
Phone: 651-251-7570

**MEP:** DUNHAM
**Dunham Associates, Inc.**
50 South Sixth St
Suite 1100
Minneapolis, MN 55402
Phone: 612-465-7550

**CIVIL:** EVS
**EVS**
10025 Valley View Rd
Suite 140
Eden Prairie, MN 55344
Phone: 952-646-0236

**LANDSCAPE:** CONFLUENCE
**CONFLUENCE**
524 N Main Ave
Suite 201
Sioux Falls, SD 57104
Phone: 605-339-1205


## ARCHITECT OF RECORD


**A/E:**
**Stone Group Architects**
**600 E 7th Street**
**Sioux Falls, SD 57103**
**605-271-1144**
STONE GROUP ARCHITECTS


**STAMP**
REGISTERED PROFESSIONAL ENGINEER
REG. NO. 4750
MICHAEL A. OSSITTO
SOUTH DAKOTA
06/22/2022

Office of Construction and Facilities Management

VA U.S. Department of Veterans Affairs

| Drawing Title | Phase | Project Title | Project Number |
|---|---|---|---|
| BUS SHELTER ENLARGED FRAMING PLAN AND DETAILS | CONSTRUCTION DOCUMENTS | NEW FRONT LOBBY AND PRIMARY CARE ADDITION | VA #438-480<br>ERA #2020-361 |
| | | | Building Number: 5 |
| Approved: | FOR OFFICIAL USE ONLY | Location: SIOUX FALLS, SOUTH DAKOTA | Drawing Number: SF403 |
| | | Issue Date: 06/22/2022 · Checked: SJC · Drawn: IDB | |

VA FORM 08 - 6231

C:_Revit_Local_Short Term\Local\20-361_S20_SF_VA Lobby_bevington ERA.rvt

6/21/2022 4:15:16 PM

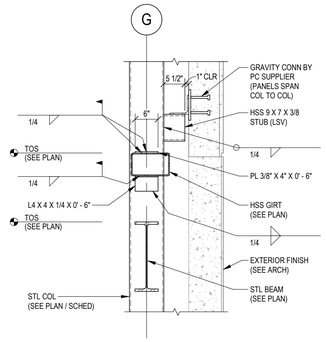


1 SF501 FRAMING DETAIL
3/4" = 1'-0"

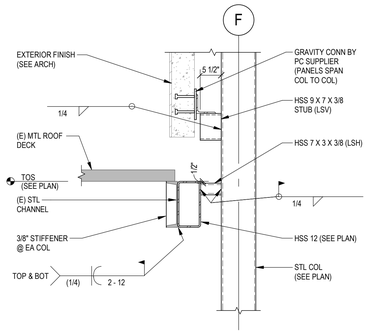


2 SF501 FRAMING DETAIL
3/4" = 1'-0"

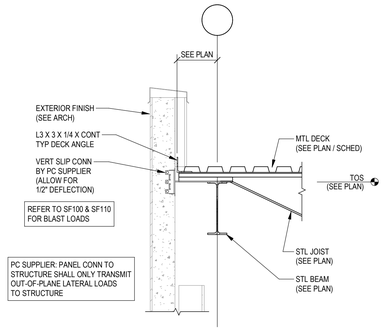


3 SF501 FRAMING DETAIL
3/4" = 1'-0"

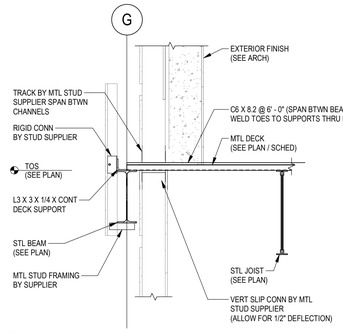


4 SF501 FRAMING DETAIL
3/4" = 1'-0"

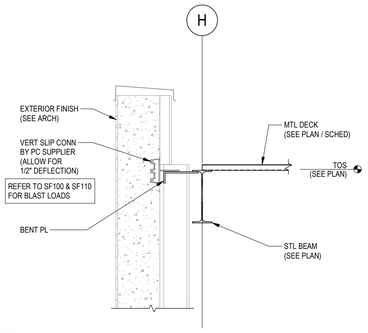


5 SF501 FRAMING DETAIL
3/4" = 1'-0"

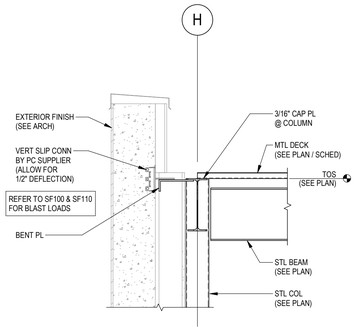


6 SF501 FRAMING DETAIL
3/4" = 1'-0"

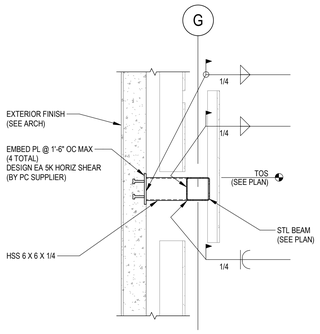


7 SF501 FRAMING DETAIL
3/4" = 1'-0"

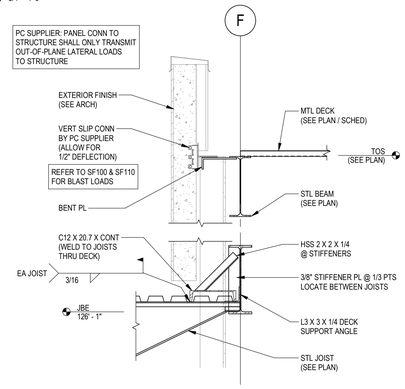


8 SF501 FRAMING DETAIL
3/4" = 1'-0"

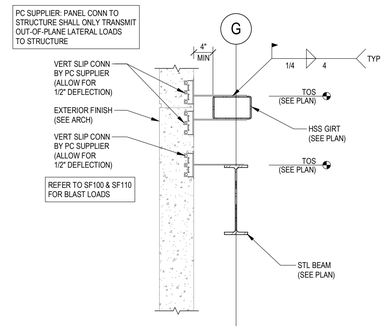


9 SF501 FRAMING DETAIL
3/4" = 1'-0"

| Revision # | Description | Date: |
|---|---|---|
| | | |

## CONSULTANTS


ARCHITECTURAL:
BWBR
380 St. Peter St
Suite 600
St. Paul, MN 55102
Phone: 651-222-3701

STRUCTURAL:
ERA STRUCTURAL ENGINEERING
**Ericksen Roed & Associates**
2550 University Ave W
Suite 423-S
St. Paul, MN 55114
Phone: 651-251-7570

MEP:
DUNHAM
**Dunham Associates, Inc.**
50 South Sixth St.
Suite 1100
Minneapolis, MN 55402
Phone: 612-465-7550

CIVIL:
EVS
**EVS**
10025 Valley View Rd
Suite 140
Eden Prairie, MN 55344
Phone: 952-646-0236

LANDSCAPE:
CONFLUENCE
**CONFLUENCE**
524 N Main Ave
Suite 201
Sioux Falls, SD 57104
Phone: 605-339-1205


## ARCHITECT OF RECORD


**A/E:**
**Stone Group Architects**
**600 E 7th Street**
**Sioux Falls, SD 57103**
**605-271-1144**
STONE GROUP ARCHITECTS


STAMP

REGISTERED PROFESSIONAL ENGINEER
REG. NO. 4750
MICHAEL A. DUBITSKI
SOUTH DAKOTA
06/22/2022

Office of Construction and Facilities Management

VA U.S. Department of Veterans Affairs

| | |
|---|---|
| Drawing Title | FRAMING DETAILS |
| Phase | CONSTRUCTION DOCUMENTS |
| Project Title | NEW FRONT LOBBY AND PRIMARY CARE ADDITION |
| Project Number | VA #438-480 ERA #2020-361 |
| Building Number | 5 |
| Approved: | |
| | FOR OFFICIAL USE ONLY |
| Location | SIOUX FALLS, SOUTH DAKOTA |
| Issue Date | 06/22/2022 |
| Checked | SJC |
| Drawn | IDB |
| Drawing Number | SF501 |

VA FORM 08 - 6231

C:_Revit_Local_Central_Models\20-361_S20_SF_VA Lobby_lewington\ERA.rvt

6/21/2022 4:15:30 PM

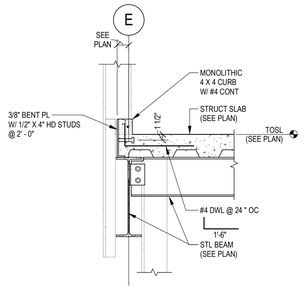


1 SF502 FRAMING DETAIL
3/4" = 1'-0"

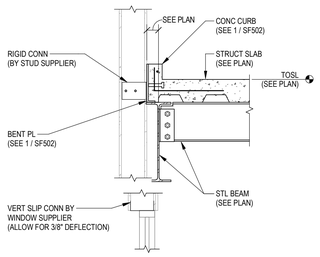


2 SF502 FRAMING DETAIL
3/4" = 1'-0"

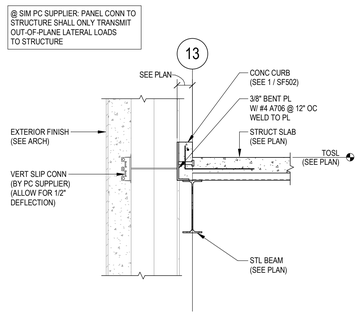


3 SF502 FRAMING DETAIL
3/4" = 1'-0"

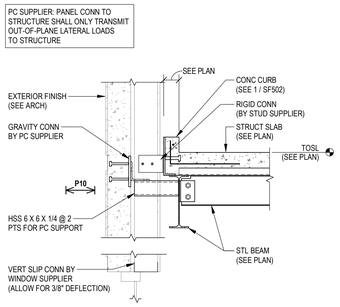


4 SF502 FRAMING DETAIL
3/4" = 1'-0"

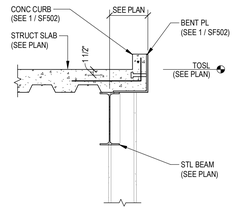


6 SF502 FRAMING DETAIL
3/4" = 1'-0"

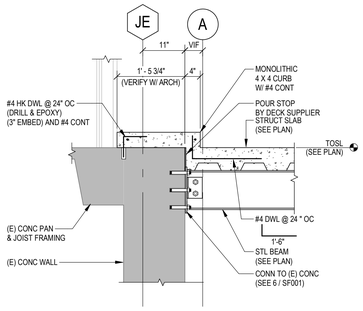


7 SF502 FRAMING DETAIL
3/4" = 1'-0"

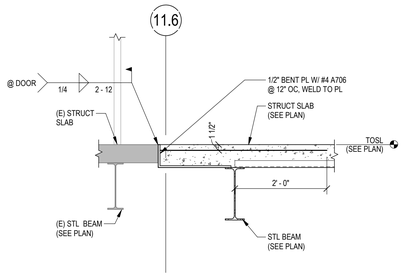


8 SF502 FRAMING DETAIL
3/4" = 1'-0"

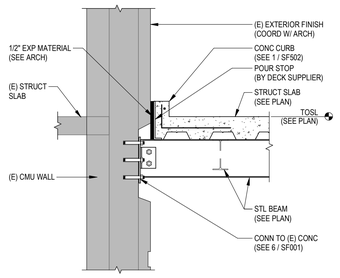


9 SF502 FRAMING DETAIL
3/4" = 1'-0"

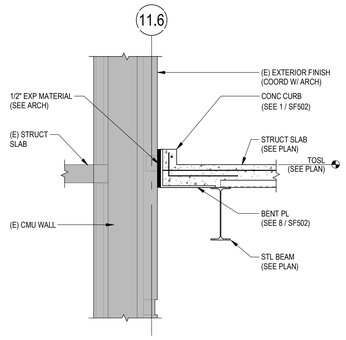


10 SF502 FRAMING DETAIL
3/4" = 1'-0"

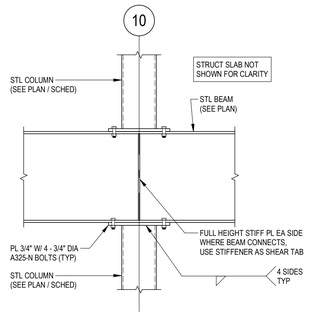


5 SF502 FRAMING DETAIL
3/4" = 1'-0"

| Revision # | Description | Date: |
|---|---|---|
| | | |

## CONSULTANTS

**ARCHITECTURAL:**
BWBR
380 St. Peter St
Suite 600
St. Paul, MN 55102
Phone: 651-222-3701

**STRUCTURAL:**
ERA STRUCTURAL ENGINEERING
**Ericksen Roed & Associates**
2550 University Ave W
Suite 423-S
St. Paul, MN 55114
Phone: 651-251-7570

**MEP:**
DUNHAM
**Dunham Associates, Inc.**
50 South Sixth St.
Suite 1100
Minneapolis, MN 55402
Phone: 612-465-7550

**CIVIL:**
EVS
**EVS**
10025 Valley View Rd
Suite 140
Eden Prairie, MN 55344
Phone: 952-646-0236

**LANDSCAPE:**
CONFLUENCE
**CONFLUENCE**
524 N Main Ave
Suite 201
Sioux Falls, SD 57104
Phone: 605-339-1205

## ARCHITECT OF RECORD

**A/E:**
**Stone Group Architects**
**600 E 7th Street**
**Sioux Falls, SD 57103**
**605-271-1144**

STONE GROUP ARCHITECTS

**STAMP**
REGISTERED PROFESSIONAL ENGINEER
REG. NO. 4750
MICHAEL A. DUITSMAN
SOUTH DAKOTA
06/22/2022

Office of Construction and Facilities Management

VA U.S. Department of Veterans Affairs

**Drawing Title**
FRAMING DETAILS

**Phase**
CONSTRUCTION DOCUMENTS

**Project Title**
NEW FRONT LOBBY AND PRIMARY CARE ADDITION

**Project Number**
VA #438-480
ERA #2020-361

**Building Number**
5

**Approved:**

FOR OFFICIAL USE ONLY

**Location**
SIOUX FALLS, SOUTH DAKOTA

**Issue Date** 06/22/2022
**Checked** SJC
**Drawn** IDB

**Drawing Number**
SF502

C:_Revit_Local_Central_Models\20-361_S20_SF_VA Lobby_Jeevington\ERA.rvt

6/21/2022 4:15:39 PM

VA FORM 08 - 6231

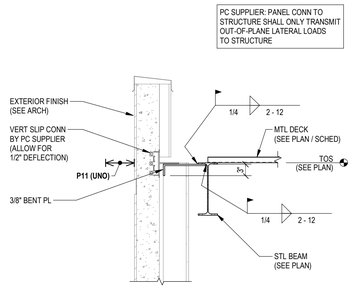


1 SF503 FRAMING DETAIL
3/4" = 1'-0"

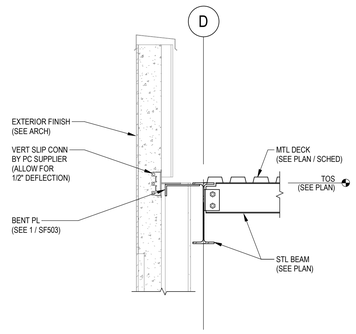


2 SF503 FRAMING DETAIL
3/4" = 1'-0"

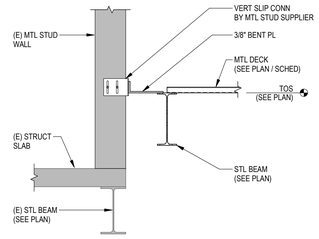


3 SF503 FRAMING DETAIL
3/4" = 1'-0"

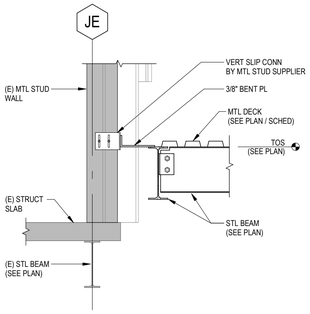


4 SF503 FRAMING DETAIL
3/4" = 1'-0"

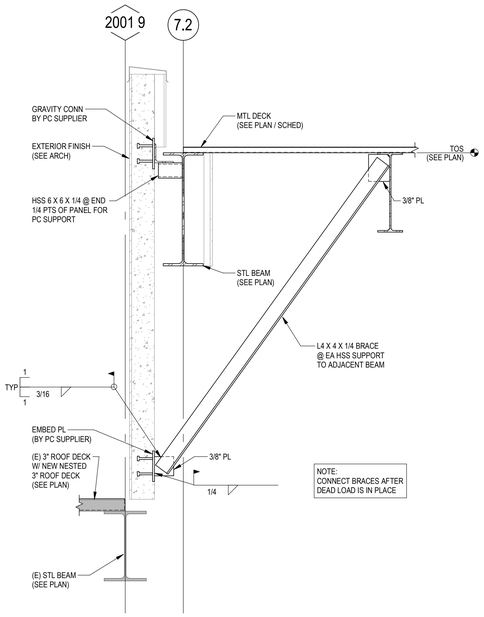


9 SF503 FRAMING DETAIL
3/4" = 1'-0"

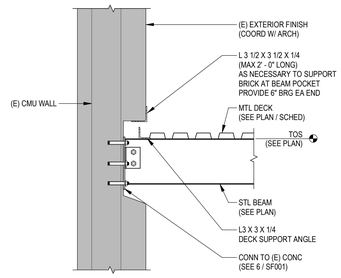


5 SF503 FRAMING DETAIL
3/4" = 1'-0"

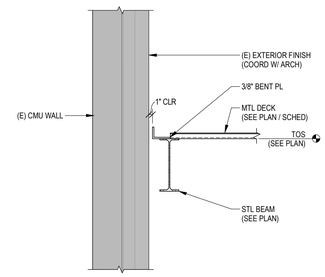


6 SF503 FRAMING DETAIL
3/4" = 1'-0"

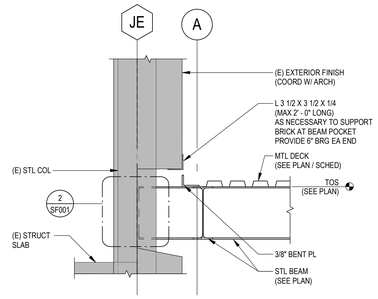


7 SF503 FRAMING DETAIL
3/4" = 1'-0"

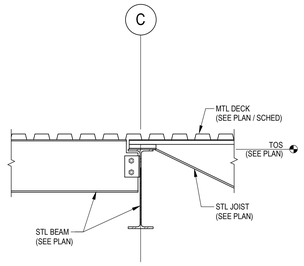


8 SF503 FRAMING DETAIL
3/4" = 1'-0"

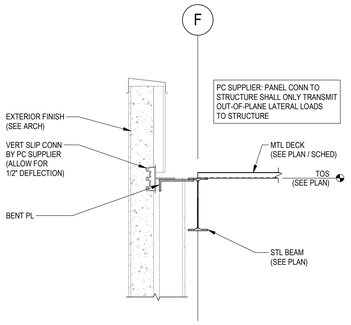


10 SF503 FRAMING DETAIL
3/4" = 1'-0"

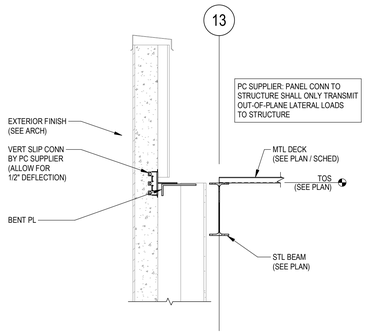


11 SF503 FRAMING DETAIL
3/4" = 1'-0"

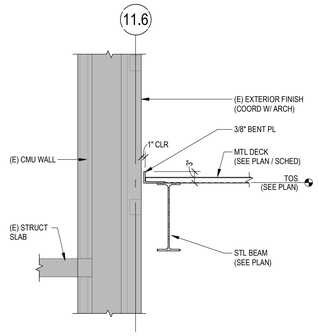


13 SF503 FRAMING DETAIL
3/4" = 1'-0"

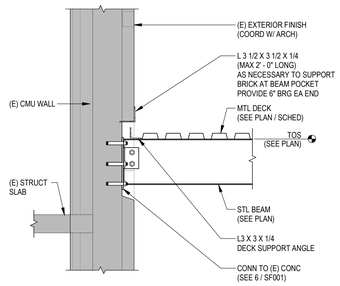


14 SF503 FRAMING DETAIL
3/4" = 1'-0"

| Revision # | Description | Date: |
|---|---|---|
| | | |

## CONSULTANTS


ARCHITECTURAL: BWBR
380 St. Peter St
Suite 600
St. Paul, MN 55102
Phone: 651-222-3701

STRUCTURAL: ERA STRUCTURAL ENGINEERING
Ericksen Roed & Associates
2550 University Ave W
Suite 423-S
St. Paul, MN 55114
Phone: 651-251-7570

MEP: DUNHAM
Dunham Associates, Inc.
50 South Sixth St
Suite 1100
Minneapolis, MN 55402
Phone: 612-465-7550

CIVIL: EVS
EVS
10025 Valley View Rd
Suite 140
Eden Prairie, MN 55344
Phone: 952-646-0236

LANDSCAPE: CONFLUENCE
CONFLUENCE
524 N Main Ave
Suite 201
Sioux Falls, SD 57104
Phone: 605-339-1205

## ARCHITECT OF RECORD

A/E:
Stone Group Architects
600 E 7th Street
Sioux Falls, SD 57103
605-271-1144

STONE GROUP ARCHITECTS


STAMP
REGISTERED PROFESSIONAL ENGINEER
REG. NO. 4750
MICHAEL A. DESOTTO
SOUTH DAKOTA
06/22/2022

Office of Construction and Facilities Management

VA U.S. Department of Veterans Affairs

| Drawing Title | Phase | Project Title | Project Number |
|---|---|---|---|
| FRAMING DETAILS | CONSTRUCTION DOCUMENTS | NEW FRONT LOBBY AND PRIMARY CARE ADDITION | VA #438-480 ERA #2020-361 |
| Approved: | FOR OFFICIAL USE ONLY | Location: SIOUX FALLS, SOUTH DAKOTA | Building Number: 5 |
| | | Issue Date: 06/22/2022 · Checked: SJC · Drawn: IDB | Drawing Number: SF503 |

VA FORM 08 - 6231

C:_Revit_Local_ShortTermLocal\20-361_S20_SF_VA Lobby_bevingtonERA.rvt

6/21/2022 4:15:49 PM

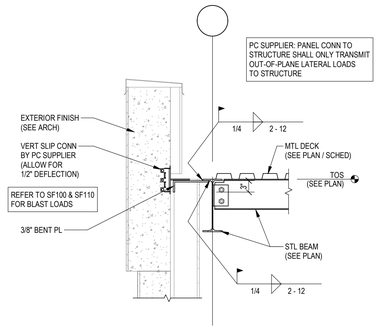


1 SF504 FRAMING DETAIL
3/4" = 1'-0"

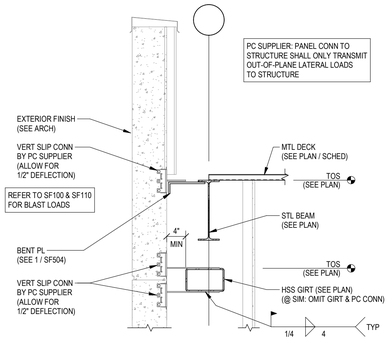


2 SF504 FRAMING DETAIL
3/4" = 1'-0"

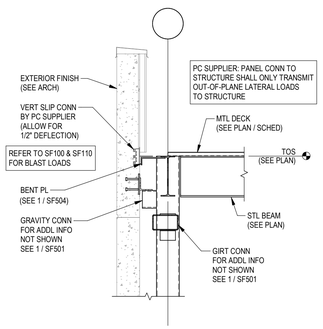


3 SF504 FRAMING DETAIL
1/2" = 1'-0"

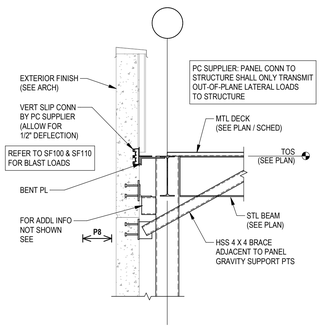


4 SF504 FRAMING DETAIL
1/2" = 1'-0"

| Revision # | Description | Date: |
|---|---|---|
| | | |

## CONSULTANTS

**ARCHITECTURAL:**
BWBR
380 St. Peter St
Suite 600
St. Paul, MN 55102
Phone: 651-222-3701

**STRUCTURAL:**
ERA STRUCTURAL ENGINEERING
**Ericksen Roed & Associates**
2550 University Ave W
Suite 423-S
St. Paul, MN 55114
Phone: 651-251-7570

**MEP:**
DUNHAM
**Dunham Associates, Inc.**
50 South Sixth St.
Suite 1100
Minneapolis, MN 55402
Phone: 612-465-7550

**CIVIL:**
EVS
**EVS**
10025 Valley View Rd
Suite 140
Eden Prairie, MN 55344
Phone: 952-646-0236

**LANDSCAPE:**
CONFLUENCE
**CONFLUENCE**
524 N Main Ave
Suite 201
Sioux Falls, SD 57104
Phone: 605-339-1205

## ARCHITECT OF RECORD

**A/E:**
**Stone Group Architects**
**600 E 7th Street**
**Sioux Falls, SD 57103**
**605-271-1144**

STONE GROUP ARCHITECTS

**STAMP**
REGISTERED PROFESSIONAL ENGINEER
REG. NO. 4750
MICHAEL A. DUBITSKI
SOUTH DAKOTA
06/22/2022

Office of Construction and Facilities Management

VA U.S. Department of Veterans Affairs

**Drawing Title**
FRAMING DETAILS

**Phase**
CONSTRUCTION DOCUMENTS

**Project Title**
NEW FRONT LOBBY AND PRIMARY CARE ADDITION

**Project Number**
VA #438-480
ERA #2020-361

**Building Number**
5

**Approved:**

FOR OFFICIAL USE ONLY

**Location**
SIOUX FALLS, SOUTH DAKOTA

**Issue Date** 06/22/2022
**Checked** SJC
**Drawn** IDB

**Drawing Number**
SF504

VA FORM 08 - 6231

C:_Revit_Local_Central_Models\Short Term\Local\20-361_S20_SF_VA Lobby_Bevington\ERA.rvt

6/21/2022 4:15:57 PM

## STEEL COLUMN SCHEDULE

| MARK | SIZE | BASE PLATE THICKNESS | BASE PLATE WIDTH | BASE PLATE LENGTH | BASE PLATE TYPE | GROUT | ANCHORS QTY | ANCHORS DIA | ANCHORS EMBED | COMMENTS |
|---|---|---|---|---|---|---|---|---|---|---|
| SC1 | HSS6 X 6 X 1/4 | 3/4" | 1' - 2" | 1' - 2" | 3 | 2" | 4 | 3/4" | 9" | |
| SC2 | HSS6 X 6 X 1/4 | 3/4" | 1' - 1" | 1' - 1" | 5 | 2" | 4 | 1" | 9" | SEE 6 / SB501 |
| SC4 | HSS7 X 7 X 1/4 | 2" | 1' - 4" | 1' - 4" | 1 | 2" | 4 | 1 1/2" | 1' - 8" | SEE 1 / SB501 |
| SC4A | HSS7 X 7 X 1/4 | 2" | 1' - 4" | 1' - 4" | 2 | 2" | 4 | 1 1/2" | 1' - 8" | SEE 1 / SB501 |
| SC5 | HSS8 X 8 X 1/4 | 2" | 1' - 4" | 1' - 4" | 1 | 2" | 4 | 1 1/2" | 1' - 8" | SEE 1 / SB501 |
| SC6 | HSS8 X 8 X 3/8 | 2" | 1' - 4" | 1' - 4" | 1 | 2" | 4 | 1 1/2" | 1' - 8" | SEE 1 / SB501 |
| SC7 | HSS9 X 9 X 1/4 | 2" | 1' - 4" | 1' - 4" | 1 | 2" | 4 | 1 1/2" | 1' - 8" | SEE 1 / SB501 |
| SC8 | HSS9 X 9 X 3/8 | 2" | 1' - 4" | 1' - 4" | 1 | 2" | 4 | 1 1/2" | 1' - 8" | SEE 1 / SB501 |
| SC9 | HSS9 X 9 X 3/8 | 1 1/4" | 1' - 2" | 1' - 2" | 2 | 2" | 4 | 1" | 9" | SEE 5 / SB501 |
| SC10 | HSS20 X 12 X 3/8 | 1 3/4" | 1' - 4" | 2' - 8" | 4 | 2" | 4 | 1 1/4" | 1' - 8" | |
| SC11 | HSS20 X 12 X 5/8 | 2" | 1' - 4" | 2' - 8" | 4 | 2" | 4 | 1 1/4" | 1' - 8" | |
| SC12 | HSS20 X 12 X 5/8 | 2" | 1' - 10" | 2' - 6" | 4 | 3" | 4 | 1 1/4" | 1' - 8" | |

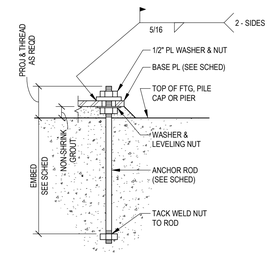


**ANCHOR ROD**

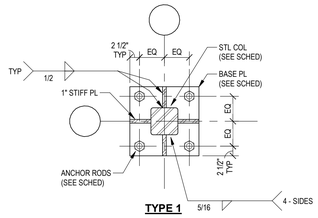


**TYPE 1**

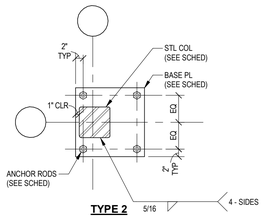


**TYPE 2**

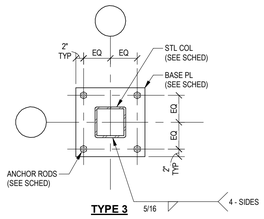


**TYPE 3**

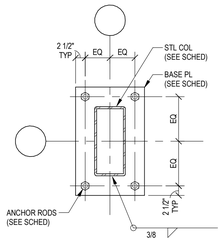


**TYPE 4**

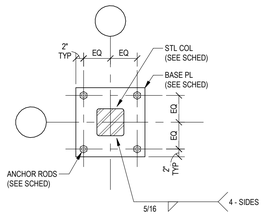


**TYPE 5**

#02000A

| Revision # | Description | Date: |
|---|---|---|
| | | |

## CONSULTANTS


**ARCHITECTURAL:** BWBR
380 St. Peter St
Suite 600
St. Paul, MN 55102
Phone: 651-222-3701

**STRUCTURAL:** ERA STRUCTURAL ENGINEERING
**Ericksen Roed & Associates**
2550 University Ave W
Suite 423-S
St. Paul, MN 55114
Phone: 651-251-7570

**MEP:** DUNHAM
**Dunham Associates, Inc.**
50 South Sixth St.
Suite 1100
Minneapolis, MN 55402
Phone: 612-465-7550

**CIVIL:** EVS
**EVS**
10025 Valley View Rd
Suite 140
Eden Prairie, MN 55344
Phone: 952-646-0236

**LANDSCAPE:** CONFLUENCE
**CONFLUENCE**
524 N Main Ave
Suite 201
Sioux Falls, SD 57104
Phone: 605-339-1205


## ARCHITECT OF RECORD


**A/E:**
**Stone Group Architects**
**600 E 7th Street**
**Sioux Falls, SD 57103**
**605-271-1144**

STONE GROUP ARCHITECTS


**STAMP**

REGISTERED PROFESSIONAL ENGINEER
REG. NO. 4750
MICHAEL A. DUSTMAN
SOUTH DAKOTA
06/22/2022

Office of Construction and Facilities Management

VA U.S. Department of Veterans Affairs

| | |
|---|---|
| Drawing Title | COLUMN SCHEDULE |
| Phase | CONSTRUCTION DOCUMENTS |
| Project Title | NEW FRONT LOBBY AND PRIMARY CARE ADDITION |
| Project Number | VA #438-480 ERA #2020-361 |
| Building Number | 5 |
| Approved: | |
| | FOR OFFICIAL USE ONLY |
| Location | SIOUX FALLS, SOUTH DAKOTA |
| Issue Date | 06/22/2022 |
| Checked | SJC |
| Drawn | IDB |
| Drawing Number | SF601 |

VA FORM 08 - 6231

C:_Revit_Local_Central_ShortTerm\Local\20-361_S20_SF_VA Lobby_lewington!ERA.rvt

6/21/2022 4:16:03 PM